WESTINGHOUSE AIR BRAKE HANDBOOK

The Westinghouse Air-Brake Handbook

A CONVENIENT REFERENCE BOOK

For All Persons Interested in

The Construction, Installation, Operation, Care, Maintenance, or Repair of the Westinghouse Air-Brake Systems, or in the Control of Trains by Means of the Air Brake

---

BY

International Correspondence Schools

SCRANTON, PA.

2d Edition, 21st Thousand, 7th Impression

SCRANTON, PA.

INTERNATIONAL TEXTBOOK COMPANY

1926

Copyright, 1913, 1918, by
International Textbook Company
Copyright in Great Britain
All Rights Reserved
Printed in U.S.A.

Press of
International Textbook Company
Scranton, Pa.

89130

PREFACE TO FIRST EDITION

Since the introduction of the quick-action brake, a growing yearly increase in passenger traffic has brought with it a growing increase in the length and weight of passenger trains, in the train speed, and in the frequency of service. Each increase reduced the comparative efficiency of the existing brake system and necessitated improvements.

In freight service, the increase in the capacity of the cars, the tonnage, and the length of trains augmented the difficulty of brake control to such an extent that new brake apparatus for both engines and cars had to be devised in order that the brake could safely and efficiently control the train. These improvements have been so rapid and have resulted in such a multiplicity of air-brake systems and air-brake apparatus, and the apparatus is made in so many sizes, that today it is a difficult matter to distinguish the different pieces of apparatus and to tell accurately without special information on the subject, to what particular system a piece of apparatus belongs.

The purpose of this handbook is to supply this special information and to present in convenient form complete reliable data relative to the different Westinghouse Air-Brake Systems. Among

other things, it gives the piece and reference numbers of each part of the apparatus with special instructions for ordering the apparatus; the weights and dimensions; the number of sizes in which each piece of apparatus is made, and the particular equipment that each size is to be used with; the construction, operation, and care of the equipment; tables of capacities of reservoirs, and methods of calculation of capacities; tables of capacities of air compressors; methods of piping two or more compressors to give either greater capacity or greater pressure, and tables of capacities when so piped; tests of apparatus; data of both standing and running tests of trains fitted with the different equipments; information relative to the air-signal system, and the water-raising system; etc.

The various tables have been selected with care, and the rules and formulas given are stated simply and concisely, their applications being clearly illustrated by examples and their solutions.

Care has been exercised to arrange the matter in a convenient and logical manner, and a very full index increases further the facility with which any subject may be located.

This handbook was prepared by Mr. J. F. Cosgrove, Director, Railway Department.

INTERNATIONAL CORRESPONDENCE SCHOOLS

April, 1913

PREFACE TO SECOND EDITION

Since the introduction of the Westinghouse Air-Brake Handbook in 1913, considerable new apparatus has been introduced into regular service; also a number of changes have been made in existing older air apparatus. The present revision of the Handbook has been made so as to incorporate data relative to the new equipment and to the changes made in the old equipment.

The revised Handbook includes over-all dimensions of the equipments, also spring-identification tables for all equipment containing springs. These tables are for the convenience of air-brake men, storekeepers, and others interested in identifying the various springs used in the different apparatus.

INTERNATIONAL CORRESPONDENCE SCHOOLS

October, 1917

INDEX

8-in. air compressor, 29
9½-in. air compressor, 37
11-in. air compressor, 40
9½-in. air compressor, Output of, 57
11-in. air compressor, Output of, 58
9½-in. and 11-in. air compressors, Steam consumption of, 61
9½-in. and 11-in. compressors, Time to compress air from 0 to 90 lb. with, 63
11-in. and 9½-in. air compressors, Comparative tests of, 59
8½-in. cross-compound air compressor, 44
10½-in. cross-compound air compressor, 51

A

Adjusting compressor governor, 105
Air-brake hose, M. C. B. specifications for, 409
compressor, Output of 8-in., 56
compressors, 29
compressor oil cups, 88
gauges, 412
-signal equipments for passenger, baggage, mail, or express cars, 20
-signal equipments, Locomotive, 20
-signal equipments recommended, 432
Air-signal equipments, Spring identification of, 431
-signal whistle, 426
-signaling system, Train, 424
-storage reservoirs, 106
strainer, 39
Angle cocks, 417
Automatic brake for freight- or switch-engine tender, 15
Auxiliary reservoirs, 367
reservoirs, Capacity and weight of, 369
reservoirs for locomotives, tenders, and cars of different weights, 246
reservoirs, Standard sizes of, 369
reservoirs used with different size brake cylinders, 369

B

B-6 double-pressure feed-valve, 160
-6 feed-valve, Care of, 163
-6 feed-valve, Regulation of, 162
-6 feed-valve, Spring identification of, 161
Brake cylinder, Force exerted in, 362
cylinder, Type C, 8″ × 12″ combined, 355
cylinder, Type C, 10″ ×12″ combined, 355
cylinder, Type D, 8″ × 12″, detached, 356
cylinder, Type D, 10″ × 12″, detached, 358

Brake cylinders, Capacity of, 361
cylinders, Cleaning, 359
cylinders, Cross-sectional area of, 360
cylinders, Dimensions of type M passenger, 346
cylinders, Dimensions of type N passenger, 350
cylinders, Engine-truck, 338
cylinders for locomotives, tenders, and cars of different weights, 246
cylinders, Piece numbers of the type M passenger, 347
cylinders, Piece numbers of type N passenger, 351
cylinders, Piece and reference numbers of parts of type K tender, 343
cylinders, Piece and reference numbers of type L tender, 344
cylinders, Piece and reference numbers of type M passenger, 348
cylinders, Piece and reference numbers of parts of type N passenger, 352
cylinders, Piece numbers of type K tender, 342
cylinders, Piston-rod crossheads for driver, 336
cylinders, Push-down driver, 335
cylinders, Schedule of locomotive, 26
cylinders, Tender, 339
cylinders, Type B driver, 332
cylinders, Type C driver, 334
cylinders, Type M passenger, 345
-pipe strainers, 397
Brake-pipe vent valve, 248
valve, C-7, 121
valve, D-8, 121
-valve feed-valve pipe connection, 165
valve, G-6, 124
valve, H-5 automatic, 129
valve, H-6 automatic, 134
valve, Operation of, 127
valve, Operation of H-5 automatic, 131
valve, S-3 straight-air, 150, 153
valve, S-6 independent, 142
valve, SF-1 independent, 140
valves, Care of, 156
valves, Lubricating, 156

C

C-6 feed-valve, Operation of, 158
-6 feed-valve, Regulation of, 159
-6 feed-valve, Spring identification of, 158
-6 single-pressure feed-valve, 157
-7 brake valve, 121
Capacity and weight of supplementary reservoirs, 370
dimensions, and weight of Westinghouse air compressors, 50
of air-storage reservoirs, 108
of brake cylinders, 361
Calculating main reservoir, 115
recommended for main reservoir, 109
Car discharge valve, 430
Care of B-6 feed-valve, 163
of brake valves, 156
of distributing valve, 286
Causes of compressor failures, 51

Centrifugal dirt collectors, 394
Cleaning and oiling S-3-A straight-air brake valve, 155
brake cylinders, 359
triple valves, 244
Comparative steam and coal curves of air compressors, 67
tests of 11-in. and 9½-in. air compressors, 59
Comparison of output of 9½-in., 11-in., and 8½-in. cross-compound air compressors, 59
of plain and quick-action triple valves, 185
of types K and H-1 (F-36) triple valves, 200
Compressor, 8-in. air, 29
8½-in. cross-compound air, 44
9½-in. air, 37
10½-in. cross-compound air, 51
11-in. air, 40
failures, Causes of, 51
governor, Adjusting, 105
governor, Type S-4, 91
governor, Type SD-5, 96
governor, Type SF-5, 98
governors, 89
governors, Sizes of, 91
governors, weights of, 90
Compressors, Air, 29
Comparative steam and coal curves of air, 67
in series, Operating, 69
in series-compound, Operating, 69
Piping diagrams for two air, 106
Pistons and rings for rebored air, 78
Temperature test of air, 62
Conductor's valve, B-3-A, 401
valve, C-3, 402
Conductor's valve, Operation of, 403
Construction of control valve, 301
Control valve, Construction of, 301
valve, Lubricating the, 331
valve, No. 3-D passenger, 300
valve, No. 3-E passenger, 295
valve, Operation of, 313
valve, Spring identification of No. 3-E passenger, 300
Coupling-groove cleaning tool, 409
Cross-compound compressors, Lubricating, 54
-sectional area of cylinders, 360
Cut-out cocks, 418
Cylinder cap, No. 6 distributing valve quick-action, 256

D

D-8 brake valve, 121
Development of passenger triple valve, 210
of PC passenger brake, 287
of the ET locomotive brake, 258
Diagrammatic views of L triple valve, 227
Dimensions, capacity, and weight of Westinghouse air compressors, 50
and weights of brake-pipe strainers, 398
and weights of centrifugal dirt collectors, 394
of hose and couplers, 405
Dirt collectors, Centrifugal, 394
collectors, Dimensions and weights of centrifugal, 394

Distributing valve, Care of, 286
valve, No. 5, 250
valve, No. 6, 253
valve, Operation of, 273
valve, Pressure-maintaining feature of, 283
Double-pressure control, Engine and tender equipment for, 13
Drain cock, Spring identification of main reservoir, 372
Drain cocks, Reservoir, 372
Dummy couplings, 408

E

Empty and load brake for freight cars, 24
Energy of train at different speeds, 288
Engine-and-tender hose connection, 407
equipment with straight-air brake, 14
-tender equipment for double-pressure control, 13
-truck brake cylinders, 338
-truck brake for locomotive with A-1 engine equipment, 12
Engineer's brake valves, History of, 117
Equalizing reservoirs, 367
Equipments, Index to, 2

F

F crossed-passage pipe bracket, 163
-1 (H-24) plain triple valve, 167
-2 (F-46) plain triple valve, 167
Features of type K triple valves, 192
of type L triple valves, 223
Feed-valve, B-6 double-pressure, 160
Feed-valve, C-6 single-pressure, 157
Filler blocks, 363
Force exerted in brake cylinder, 362
Freight-brake tests, 203
-brake tests, Standing, 209
-brake triple valves, 174
-car equipments, Twin-cylinder type, 23
or switch-engine tender, Automatic brake for, 15
Functions of triple valve, 170

G

G-24 and F-25 plain triple valve, 169
-6 brake valve, 124
-6 brake valve, Spring identification of, 127
Gauges, Air, 412
Governors, Compressor, 89

H

H direct-passage pipe bracket, 165
-1 (F-36) quick-action, freight, triple valve, 179
-2 (H-49) quick-action, freight, triple valve, 181
-5 automatic brake valve, 129
-6 automatic brake valve, 134
-6 automatic brake valve, Operation of, 137
-6 brake valve, Spring identification of, 137
High-speed reducing valve, 390
Hose and couplers, Dimensions of, 405
couplings and fittings, 404
couplings and fittings, Weights of, 409

I

Index to equipments and schedules, 2

K

K-1 triple valve, 186
-2 triple valve, 188

L

L-2-A quick-action, passenger, triple valve, 217
-1-B quick-action, passenger, triple valve, 215
-3 quick-action passenger, triple valve, 220
LN equipment for passenger, baggage, mail, or express cars, 18
equipment, Operation of, 230
equipment, Piping diagram of, 226
Locomotive air-signal equipments, 20
brake cylinders, Schedule of, 26
brake, Development of the ET, 258
brake, No. 6 ET, 4
equipment, Old standard, A-1, 6
equipment, Old standard, AD, 8
equipment, Old standard, AG, 10
with No. 6 ET equipment, Standard engine-truck brake for, 12
Lubricating brake valves, 156
cross-compound compressors, 54
simple compressors, 53
the control valve, 331

M

Main reservoir capacity, Calculating, 115
reservoir capacity recommended, 109
reservoirs, Cross-section area of, 116
reservoirs, Location of, 115
Main reservoirs, Standard stock sizes of, 112
reservoirs, Style and construction of, 110
M. C. B. specifications for air-brake hose, 409

N

No. 3-D passenger control valve, 300
3-E passenger control valve, 295
5 distributing valve, 250
6 distributing valve, 253
6 distributing valve, Description of, 265
6 distributing valve, Duty of parts of, 720
6 distributing valve quick-action cylinder cap, 256
6 distributing valve, Spring identification of, 257
6 ET equipment, Piping arrangement of, 261
6 ET locomotive brake, 4

O

Oil cups, Air-compressor, 88
Old standard, A-1, locomotive equipment, 6
standard, AD, locomotive equipment, 8
standard, AG, locomotive equipment, 10
standard quick-action brake for freight cars, 22
Operating compressors in series, 69
compressors in series-compound, 69
Operation of brake valve, 127
of C-6 feed-valve, 158
of conductor's valve, 403
of control valve, 313
of distributing valve, 273

Operation of H-5 automatic brake valve, 131
of H-6 automatic brake valve, 137
of LN equipment, 230
of plain triple valve, 171
of quick-action triple valve, 183
of S-3-A, straight-air brake valve, 154
of S-3 straight-air brake valve, 151
of S-6 independent brake valve, 145
of type K triple valves, 196
Output of 8-in. air compressor, 56
of 9½-in. air compressor, 57
of 9½-in., 11-in., and 8½-in. cross-compound air compressors, Comparison of, 59
of 11-in. air compressor, 58

P

P-1 (F-27) quick-action, passenger triple valve, 212
-2 (F-29) quick-action passenger triple valve, 213
Passenger brake, Development of PC, 287
-brake tests, 237
tender brake with A-1, AD, or AG engine equipments, 15
PC equipments for heavy passenger, baggage, mail, or express cars, 19
equipment service and emergency reservoirs, 371
passenger equipment, Functions and features of, 290
PC passenger equipment, General arrangement of, 292
Pipe bracket, F crossed-passage, 163
bracket, H direct-passage, 165
connection, Brake-valve, feed-valve, 165
Piping arrangement of No. 6 ET equipment, 261
diagram of LN equipment, 226
diagram of PC passenger equipment, 293
diagrams for two air compressors, 106
Piston-rod crossheads for driver-brake cylinders, 336
Pistons and rings for rebored air compressors, 78
Plain triple valves, Operation of, 171
triple valves for engines and tenders, 166
triple valves, Spring identification of, 169
Pressure heads for truck and tender brake cylinders, 366
-maintaining feature of distributing valve, 283
-retaining valves, 374
Push-down driver-brake cylinders, 335

Q

Quick-action brake for passenger, baggage, mail, or express cars, 17

R

Rack tests, Passenger-brake, 237
Reducing valve, High-speed, 390
valve, Operation of high-speed, 393

Reducing valve, Signal, 427
valve, Spring identification of high-speed, 393
Regulation of B-6 feed-valve, 162
of C-6 feed-valve, 159
Release valves, 373
Reservoir drain cocks, 372
Reservoirs, Air-storage, 106
Auxiliary, 367
Capacity of air-storage, 108
Equalizing, 367
PC equipment service and emergency, 371
Supplementary, 367
Retaining valve, Dimensions of single-pressure spring-type, 383
valve, Purpose of, 374
valve, Single-pressure weight-type, 374
valves, double-pressure spring-type, Piece numbers of, 384
valves, Double-pressure, weight-type, 379
valves, double-pressure, weight-type, Operation of, 379
valves furnished with single-cylinder freight-brake equipments, 384
valves furnished with empty and load freight brake, 384
valves, Operation of, 378
valves, Single-pressure spring-type, 380
valves, single-pressure spring-type, Piece numbers of, 384
valves, single-pressure spring-type, Pressures retained by, 382
valves, single-pressure spring-type, Size of cylinder used with, 384
valves, Spring identification of, 383
Retaining valves, Standard boxes for packing, 383
Reversing cock, 165
Running freight train tests, 209

S

S-3 brake valves, Spring identification of, 154
-3 straight-air brake valve, 150
-3 straight-air brake valve, Operation of, 151
-3-A straight-air brake valve, 153
-3-A straight-air brake valve, Cleaning and oiling, 155
-3-A straight-air brake valve, Operation of, 154
-6 independent brake valve, 142
-6 independent brake valve, Operation of, 145
-6 independent brake valve, Spring identification of, 155
SF-1 independent brake valve, 140
Safety valves, Operation of, 389
valves, Spring identification of, 389
valves, Types of air-brake, 386
Schedule of locomotive brake cylinders, 26
Schedules, Index to, 2
Signal-pipe strainer, 400
reducing valve, 427
valve, 428
Simple compressors, Lubricating, 53
Size of supplementary reservoirs, 370
Sizes of auxiliary reservoirs, 369

Sizes of compressor governors, 91
Speeds, Energy of train at different, 288
Spring identification of air-signal equipments, 431
identification of B-6 feed-valve, 161
identification of C-6 feed-valve, 158
identification of G-6 brake valve, 127
identification of H-6 brake valve, 137
identification of high-speed reducing valve, 392
identification of K triple valves, 192
identification of main reservoir drain cocks, 372
identification of No. 3-E passenger control valve, 300
identification of No. 6 distributing valve, 257
identification of plain triple valves, 169
identification of retaining valves, 383
identification of S-3 brake valves, 154
identification of S-6 independent brake valve, 144
identification of safety valves, 389
identification of strainer and check-valves, 399
identification of type H quick-action triple valve, 182
identification of type L triple valves, 222
identification of type P triple valves, 215
identification of water-distributing valve, 437
Strainer, Air, 39
Standard engine truck brake for locomotive with No. 6 ET equipment, 12
schedule with K triples for freight cars, 21
Standing freight-brake tests, 209
Steam consumption of 9½-in. and 11-in. air compressors, 61
Strainer, ⅜-in. air, 400
1 in. branch-pipe, 401
and check-valve, 398
and check-valves, Spring identification of, 399
Signal-pipe, 400
Strainers, Brake-pipe, 397
Dimensions and weights of brake-pipe, 398
Supplementary reservoirs, 367
reservoirs, Capacity and weight of, 370
reservoirs, Size of, 370

T

Temperature test of air compressors, 62
Tender brake cylinders, 339
Tests, Freight-brake, 203
Passenger-brake, 237
Passenger-brake rack, 237
Passenger-brake standing, 241
Running freight-train, 209
Standing freight-brake, 209
Time to compress air from 0 to 90 lb. with 9½-in. and 11-in. compressors, 63
Train air-signaling system, 424
Triple valve, Development of freight-brake, 174
valve, Development of passenger, 210
valve, Diagrammatic views of L, 227

Triple valve, Functions of, 170
valve, H-1 (F-36) quick-action, freight, 179
valve, H-2 (H-49) quick-action, freight, 181
valve, K-1, 186
valve, K-2, 188
valve, L-1-B quick-action, passenger, 215
valve, L-2-A quick-action, passenger, 217
valve, L-3 quick-action, passenger, 220
valve, Operation of quick-action, 183
valve, P-1 (F-27) quick-action, passenger, 212
valve, P-2 (F-29) quick-action, passenger, 213
valve, Spring identification of type H quick-action, 182
valves, Cleaning, 244
valves, Comparison of plain and quick-action, 185
valves, Comparison of types K and H-1 (F-36), 202
valves, Features of type K, 182
valves, Features of type L, 223
valves for locomotives, tenders, and cars of different weights, 246
valves, Freight-brake, 174
valves, Operation of type K, 196
valves, Spring identification of type K, 192
valves, Spring identification of type L, 222
valves, Spring identification of type P, 215
Triple valves, Styles of type L, 222
Truck-hose connection, 407
Twin-cylinder-type freight-car equipments, 23
Type B driver-brake cylinders, 332
C driver-brake cylinders, 334
C, 8″ × 12″, freight-brake cylinder and reservoir combined, 355
C, 10″ × 12″, freight-brake cylinder and reservoir combined, 355
C, 8″ × 12″, freight-brake cylinder and reservoir detached, 356
D, 10″ × 12″, freight-brake cylinder and reservoir detached, 358
M passenger brake cylinders, 345
S-4 compressor governor, 91
SD-5 compressor governor, 96
SF-5 compressor governor, 98

V

Vent valve, Brake-pipe, 248

W

Water-distributing system, 433
-distributing valve, Spring identification for, 437
Weight, dimensions, and capacity of Westinghouse air compressors, 50
Weights of compressor governors, 90
of hose, couplings, and fittings, 409

The Westinghouse Air-Brake Handbook

AIR-BRAKE EQUIPMENT

EQUIPMENT AND SCHEDULES

The air-brake and air-signal equipments manufactured by the Westinghouse Air-Brake Company are divided into so many classes and each class contains so many devices that a positive means of identification is necessary in order to facilitate the ordering of apparatus. The scheme of identification adopted is given in the accompanying tables. It will be noticed that each equipment is given a designating symbol or schedule—such as EJ, A-1, AD, etc., for locomotive equipment.

When the No. 6 ET equipment is used in passenger service or in helper service or with Mallet locomotives, a quick-action cap, Pc. No. 16,528, is recommended for the distributing valve.

When schedule SWB is used on tenders equipped with schedule HK or PK, the cylinder head must be properly drilled and tapped for combined automatic and straight-air brake, unless the triple valve is placed on a bracket. If the tender is equipped with a high-speed reducing valve, the safety valve may be omitted. Tender brake cylinders are not furnished with slack adjuster connection nor arranged for use with straight-air brake schedule SWB, unless specified in the order.

For double-pressure control, one E-1 safety valve, Pc. No. 10,526, should be ordered in addition to the proper schedule, and at an extra charge.

For locomotives in double-heading service and in helping service, it is recommended that a brake-pipe vent valve, Pc. No. 15,280, be included in the locomotive brake equipment, with 10 in. by 24 in. reservoir and a 1-in. centrifugal dirt collector, Pc. No. 36,454. An extra charge is made for these. The vent

valve is less sensitive than a quick-action triple valve and is far less liable to cause undesired quick action.

The empty-and-load brake equipment provides a higher percentage of braking power throughout a loaded train than does the standard quick-action brake, thereby greatly increasing tonnage capacity on grades and eliminating the tendency to shocks and stresses in mixed trains of loads and empties.

A list of the apparatus included in each equipment is given in the tables as indicated in the following condensed index:

CONDENSED INDEX TO EQUIPMENTS AND SCHEDULES

Locomotive — *Page*

Engine and Tender
Schedule, No. 6, ET 4

Engine, Without Truck Brake
Schedule, A-1 6

Engine, With Truck Brake
Schedule, AD 8

Engine, With Truck Brake and Apparatus for High and Low Pressures
Schedule, AG 10

Truck
Schedules, D-68, D-87, D-812, D-108, D-1,010, D-1,012, D-128 12
Schedule, D-2 12

Double-Pressure Control
Schedule, U 13

Straight Air Brake (Engine)
Schedule, SWA 14

Straight Air Brake (Tender)
Schedule, SWB 14

Tender (Passenger)
Schedules, HK-812, PK-1,012, PK-1,212, PK-1,412, PK-1,612 15

Tender (Freight and Switch)
Schedules, FL-812, FL-1,012, FL-1,212, FL-1,412, FL-1,612 16

Passenger Car

Standard PM
Schedules, PM-1,012, PM-1,212, PM-1,412, PM-1,612 17
Standard LN
Schedules, LN-1,012, LN-1,212, LN-1,412, LN-1,612, LN-1,812 18
Standard PC
Schedules, PC-2-14, PC-2-16, PC-2-18 19

Air Signal

Locomotive
Schedules, J and L 20
Car
Schedule, K 20

Freight Car

Standard
Schedules, KC-68, KC-88, KC-812, KC-1,012 21
Schedules, KD-68, KD-88, KD-812, KD-1,012 21
Old Standard
Schedules, HC-68, HC-88, HC-812, HC-1,012 22
Schedules, HD-68, HD-88, HD-812, HD-1,012 22
Twin Cylinder (Standard)
Schedule, KD-2-68 23
Twin Cylinder (Old Standard)
Schedule, HD-2-68 23
Empty and Load
Schedules, KCE-88, KCE-810, KCE-108, KCE-1,010, KCE-1,012 24
Schedules, KDE-88, KDE-810, KDE-108, KDE-1,010 KDE-1,012 25
Brake Cylinders for Schedules A-1, AD, and AG Equipments 26
Driver, Truck, and Tender Brake Cylinders for No. 6 ET Equipment 28

NO. 6 ET (ENGINE AND TENDER) EQUIPMENT FOR A LOCOMOTIVE WITHOUT TRUCK BRAKE

(Standard for All Classes of Service)

Equipment designation	No. 6 ET Equipment With Compressors					
Number of compressors	One	Two	One	Two	One	Two
Size of cylinders	9½ In.	9½ In.	11 In.	11 In.	8½ In.	8½ In.
Shipping weight, pounds	2,100	2,750	2,500	3,500	3,250	4,950
Engine Fixtures	*Piece Number*					
1 9½-in. compressor	1,957					
2 9½-in. compressors		1,957				
1 11-in. compressor			3,679			
2 11-in. compressors				3,679		
1 8½-in. cross-compound compressor					39,668	
2 8½-in. cross-compound compressors						39,668
1 SF-4 compressor governor	21,735					
1 SF-5 compressor governor		21,739	21,739		21,739	
1 SF-6 compressor governor				38,222		38,222
1 1-in. steam valve	17,941					
1 1¼-in. steam valve		17,402	17,402		17,402	
1 1½-in. steam valve				38,268		38,268

		Pc. No.
1	B-6 feed valve, with F pipe bracket and gasket	18,478
1	C-6 feed valve, with F pipe bracket and gasket	18,481
1	H-6 automatic brake valve	18,462

1	10″×14½″ equalizing reservoir	4,884
1	1-in. cut-out cock (double heading)	2,135
1	S-6 independent brake valve	15,326
1	5-in. duplex air gauge (main and equalizing reservoirs)	23,334
1	3½-in. duplex air gauge (brake cylinder and brake pipe)	23,338
4	Gauge union fittings	21,468
1	No. 6 distributing valve, with plain cylinder cap, E-6 safety valve, and double chamber reservoir	16,945
1	¾-in. cut-out cock for distributing valve	2,233
1	Union T for ½-in. O. D. copper pipe	18,366
1	1-in. main reservoir cut-out cock, with governor union connection	21,979
2	Driver-brake cylinders, of size required	
1	¾-in. centrifugal dirt collector	36,542
1	1-in. cut-out cock, for pilot	2,135
2	1″×1¼″ angle fittings	3,819
2	1⅛″×22″ hose with FP-4 couplings and 1¼-in. nipples	46,283
1	F dummy coupling, for pilot	20,806
1	¾″×¾″ angle fitting	2,237
1	1⅛″×22″ hose with HP-4 coupling and ¾-in. nipple	46,252
1	¾-in. cut-out cock, for driver-brake cylinders	2,233
1	¾-in. cut-out cock with choke fitting, for tender-brake cylinders	14,494
1	C-1-20-8 strainer and check-valve	24,898
1	⅜-in cut-out cock with short handle	22,459
	Tender Fixtures	
1	Type L tender-brake cylinder, of size required	
1	1″×1¼″ self-locking angle cock	22,412
1	1″×1¼″ angle fitting	3,819
2	1⅛″×22″ hose with FP-4 couplings and 1¼-in. nipples	46,283
1	F dummy coupling	20,806
1	¾″×¾″ angle fitting	2,237
1	1⅛″×22″ hose with HP-4 coupling and ¾-in. nipple	46,252

OLD STANDARD A-1 EQUIPMENT FOR AN ENGINE WITHOUT TRUCK OR TENDER BRAKE

(Now Superseded by the No. 6 ET Equipment)

Equipment designation	A-1 Equipment With Compressors					
Number of compressors	One	Two	One	Two	One	Two
Size of cylinders	9½ In.	9½ In.	11 In.	11 In.	8½ In.	8½ In.
Shipping weight, pounds	1,800	2,450	2,250	3,250	3,000	4,700
Engine Fixtures	*Piece Number*					
1 9½-in. compressor	1,957					
2 9½-in. compressors		1,957				
1 11-in. compressor			3,679			
2 11-in. compressors				3,679		
1 8½-in. cross-compound compressor					39,668	
2 8½-in. cross-compound compressors						39,668
1 SF-4 compressor governor	21,735					
1 SF-5 compressor governor		21,739	21,739		21,739	
1 SF-6 compressor governor				38,222		38,222
1 1-in. steam valve	17,941					
1 1¼-in. steam valve		17,402	17,402		17,402	
1 1½-in. steam valve				38,268		38,268

	Pc. No.
1 G-6 brake valve with C-6 feed-valve	19,427
1 10″×14½″ equalizing reservoir	4,884
1 1-in. cut-out cock	2,135

1	5-in. duplex air gauge (main and equalizing reservoir)	23,334
2	Gauge union fittings	21,468
2	Driver-brake cylinders, of size required	
1	Auxiliary reservoir, of size required	
1	Drain cock, of size required	
1	Plain triple valve (type F), of size required	
1	¾-in. nipple, for triple valve	7,743
1	¾-in. cut-out cock, for triple valve	2,233
1	¾-in. centrifugal dirt collector	36,452
1	1-in. cut-out cock, for pilot	2,135
2	1″×1¼″ angle fittings	3,819
2	1⅛″×22″ hose with FP-4 couplings and 1¼-in. nipples	46,283
1	F dummy coupling	20,806

OLD STANDARD AD EQUIPMENT FOR AN ENGINE INCLUDING TRUCK BUT WITHOUT TENDER BRAKE

(Now Superseded by the No. 6 ET Equipment)

Equipment designation	AD Equipment With Compressors					
Number of compressors	One	Two	One	Two	One	Two
Size of cylinders	9½ In.	9½ In.	11 In.	11 In.	8½ In.	8½ In.
Shipping weight, pounds	1,900	2,550	2,300	3,300	3,050	4,750
Engine Fixtures	*Piece Number*					
1 9½-in. compressor	1,957					
2 9½-in. compressors		1,957				
1 11-in. compressor			3,679			
2 11-in. compressors				3,679		
1 8½-in. cross-compound compressor					39,668	
2 8½-in. cross-compound compressors						39,668
1 SF-4 compressor governor	21,735					
1 SF-5 compressor governor		21,739	21,739		21,739	
1 SF-6 compressor governor				38,222		38,222
1 1-in. steam valve	17,941					
1 1¼-in. steam valve		17,402	17,402		17,402	
1 1½-in. steam valve				38,268		38,268

		Pc. No.
1	G-6 brake valve and C-6 feed-valve	19,427
1	10″×14½″ equalizing reservoir	4,884
1	1-in. cut-out cock	2,135
1	5-in. duplex air gauge (main and equalizing reservoir)	23,334
2	Gauge union fittings	21,468
2	Driver-brake cylinders, of size required	
1	Auxiliary reservoir, of size required	
1	Drain cock, of size required	
1	Plain triple valve (type F), of size required	
1	¾-in. nipple, for triple valve	7,743
1	¾-in. cut-out cock, for triple valve	2,233
1	¾-in. centrifugal dirt collector	36,452
1	1-in. cut-out cock, for pilot	2,135
2	1″×1¼″ angle fittings	3,819
2	1⅛″×22″ hose with FP-4 couplings and 1¼-in. nipples	46,283
1	F dummy coupling	20,806
1	Truck-brake cylinder, of size required	
1	Auxiliary reservoir, of size required	
1	¼-in. drain cock	41,814
1	1⅛″×22″ hose with union nipples for ½-in. pipe	46,673
1	½-in. cut-out cock	15,213

OLD STANDARD AG EQUIPMENT FOR AN ENGINE INCLUDING TRUCK BRAKE AND APPARATUS FOR HIGH AND LOW PRESSURES BUT WITHOUT TENDER BRAKE

(Now Superseded by the No. 6 ET Equipment)

Equipment designation	AG Equipment With Compressors					
Number of compressors	One	Two	One	Two	One	Two
Size of cylinders	9½-In.	9½-In.	11-In.	11-In.	8½-In.	8½-In.
Shipping weight, pounds	1,950	2,550	2,350	3,350	3,100	4,800
Engine Fixtures	*Piece Number*					
1 9½-in. compressor	1,957					
2 9½-in. compressors		1,957				
1 11-in. compressor			3,679			
2 11-in. compressors				3,679		
1 8½-in. cross-compound compressor					39,668	
2 8½-in. cross-compound compressors						39,668
1 SF-4 compressor governor	21,735					
1 SF-5 compressor governor		21,739	21,739		21,739	
1 SF-6 compressor governor				38,222		38,222
1 1-in. steam valve	17,941					
1 1¼-in. steam valve		17,402	17,402		17,402	
1 1½-in. steam valve				38,268		38,268

		Pc. No.
1	G-6 brake valve	2,169
1	10″×14½″ equalizing reservoir	4,884
1	1-in. cut-out cock	2,135
1	5-in. duplex air gauge (main and equalizing reservoir)	23,334
2	Gauge union fittings	21,468
1	Feed-valve pipe connection, for brake valve	2,586
1	Reversing cock	2,574
2	C-6 feed-valves	18,480
3	Feed-valve gaskets	2,012
2	Driver-brake cylinders, of size required	
1	Auxiliary reservoir, of size required	
1	Drain cock, of size required	
1	Plain triple valve (type F), of size required	
1	¾-in. nipple, for triple valve	7,743
1	¾-in. cut-out cock, for triple valve	2,233
1	¾-in. centrifugal dirt collector	36,452
1	1-in. cut-out cock, for pilot	2,135
2	1″×1¼″ angle fittings	3,819
2	1⅛″×22″ hose with FP-4 couplings and 1¼-in. nipples	46,283
1	F dummy coupling	20,806
1	Truck-brake cylinder, of size required	
1	Auxiliary reservoir, of size required	
1	¼-in. drain cock	41,814
1	1⅛″×22″ hose connection with ½-in. fittings	46,673
1	½-in. cut-out cock	15,213

STANDARD ENGINE TRUCK BRAKE FOR A LOCOMOTIVE ALREADY PROVIDED WITH NO. 6 ET EQUIPMENT

Schedule designation	D-68	D-87	D-812	D-108	D-1,010	D-1,012	D-128
Shipping weight, pounds	110	135	160	185	210	220	275
Number of cylinder	48 D	11 D	43 D	55 D	35 D	99 D	13 D
Size of cylinder	6″×8″	8″×7″	8″×12″	10″×8″	10″×10″	10″×12″	12″×8″
Fixtures	*Piece Number*						
1 Engine-truck brake cylinder	9,729	40,815	1,964	40,825	40,827	40,829	7,551

	Pc. No.
1 ½-in. cut-out cock with choke fitting	14,493
1 1⅛″×22″ hose connection with ½-in. fittings	46,673

ENGINE TRUCK BRAKE FOR A LOCOMOTIVE ALREADY PROVIDED WITH OLD STANDARD A-1 ENGINE EQUIPMENT OR THE EQUIVALENT

Schedule designation	D-2 With —— Cylinders and —— Auxiliary Reservoirs						
Shipping weight pounds	145	175	200	235	260	270	350
Number of cylinder	48 D	11 D	43 D	55 D	35 D	99 D	13 D
Brake cylinder size	6″×8″	8″×7″	8″×12″	10″×8″	10″×10″	10″×12″	12″×8″
Auxiliary reservoir size	10″×14½″	10″×20″	10″×20″	10″×28″	10″×28″	10″×28″	12″×27″

Fixtures	*Piece Number*						
1 Engine-truck brake cylinder	9,729	40,815	1,964	40,825	40,827	40,829	7,551
1 Auxiliary reservoir	24,408	24,825	24,825	24,826	24,826	24,826	24,827

	Pc. No.
1 ¼-in. drain cock	41,814
1 1⅛″×22″ hose connection with ½-in. fittings	46,673
1 ½-in. cut-out cock	15,213

APPARATUS REQUIRED TO EQUIP ENGINE AND TENDER FOR DOUBLE-PRESSURE CONTROL ALREADY PROVIDED WITH AD ENGINE AND FL TENDER EQUIPMENT, WITH DOUBLE PRESSURE CONTROL

(Now Superseded by the No. 6 ET Equipment)

Schedule designation	U
Shipping weight, pounds	50

Fixtures	*Pc. No.*
1 C-6 single-pressure feed-valve without bracket or gasket	18,480
2 Feed-valve gaskets	2,012
1 Feed-valve pipe connection for G-6 brake valve	2,586
2 E-1 safety valves for engine-driver and truck and tender brake cylinders	10,526
1 Reversing cock	2,574

APPARATUS REQUIRED TO EQUIP AN ENGINE WITH STRAIGHT AIR BRAKE, ALREADY PROVIDED WITH A-1 OR AD ENGINE EQUIPMENTS

(Now Superseded by the No. 6 ET Equipment)

Schedule designation	SWA
Shipping weight, pounds	40

	Fixtures	*Pc. No.*
1	S-3 straight-air brake valve	2,626
1	C-6 feed-valve (set at 45 lb.) with H pipe bracket and gasket	18,482
1	No. 2 double check-valve	5,098
1	E-1 safety valve (set at 53 lb.)	10,526

APPARATUS REQUIRED TO EQUIP A TENDER WITH STRAIGHT AIR BRAKE, ALREADY PROVIDED WITH SCHEDULE FL-, HK-, OR PK-

(Now Superseded by the No. 6 ET Equipment)

Schedule designation	SWB
Shipping weight, pounds	20

	Fixtures	*Pc. No.*
2	$1\frac{1}{8}'' \times 22''$ hose with HP-4 couplings and $\frac{3}{4}$-in. nipples	46,252
2	$\frac{3}{4}$-in. angle fittings	2,237
1	No. 2 double check-valve	5,098
1	E-1 safety valve (set at 53 lb.)	10,526

AUTOMATIC BRAKE FOR PASSENGER TENDERS, FURNISHED ONLY WITH OLD STANDARD A-1, AD, OR AG ENGINE EQUIPMENTS

(Now Superseded by No. 6 ET Equipment)

Schedule designation	HK-812	PK-1,012	PK-1,212	PK-1,412	PK-1,612
Shipping weight, pounds	325	400	500	625	775
Brake cylinder, size	8″×12″	10″×12″	12″×12″	14″×12″	16″×12″
Auxiliary reservoir, size	10″×24″	12″×27″	12″×33″	14″×33″	16″×33″
Drain cock, size	¼ in.	¼ in.	¼ in.	¼ in.	½ in.
Triple valve, type	H-1	P-1	P-2	P-2	P-2
Fixtures	*Piece Number*				
1 Type K tender-brake cylinder	12,990	12,992	12,994	12,996	13,182
1 Auxiliary reservoir	3,091	24,827	3,093	3,094	3,095
1 Drain cock	41,814	41,814	41,814	41,814	7,716
1 Quick-action triple valve	1,717	1,760	1,775	1,775	1,775
1 Triple-valve gasket	2,427	2,427	4,760	4,760	4,760

		Pc. No.
1	1-in. cut-out cock, for triple valve	2,135
1	1-in. centrifugal dirt collector	36,454
1	1″×1¼″ self-locking angle cock	22,412
1	1″×1¼″ angle fitting	3,319
2	1⅛″×22″ hose with FP-4 couplings and 1¼-in. nipples	46,253
1	F dummy coupling	20,806

AUTOMATIC BRAKE FOR FREIGHT- OR SWITCH-ENGINE TENDERS, FURNISHED ONLY WITH OLD STANDARD A-1, AD, OR AG ENGINE EQUIPMENTS

(Now Superseded by No. 6 ET Equipment)

Schedule designation	FL-812	FL-1,012	FL-1,212	FL-1,412	FL-1,612
Shipping weight, pounds	250	350	500	600	700
Brake cylinder, size	8″×12″	10″×12″	12″×12″	14″×12″	16″×12″
Auxiliary reservoir, size	10″×24″	12″×27″	12″×33″	14″×33″	16″×33″
Drain cock, size	¼ in.	¼ in.	¼ in.	¼ in.	½ in.
Triple valve, type	F-1	F-1	F-2	F-2	F-2
Fixtures	*Piece Number*				
1 Type L tender-brake cylinder	12,989	12,991	12,993	12,995	13,108
1 Auxiliary reservoir	3,091	24,827	3,093	3,094	3,095
1 Drain cock	41,814	41,814	41,814	41,814	7,716
1 Plain triple valve	4,233	4,233	1,826	1,826	1,826

		Pc. No.
1	¾-in. nipple, for triple valve	7,743
1	¾-in. cut-out cock, for triple valve	2,233
1	¾-in. centrifugal dirt collector	36,452
1	1″×1¼″ self-locking angle cock	22,412
1	1″×1¼″ angle fitting	3,819
2	1⅛″×22″ hose with FP-4 couplings and 1¼-in. nipples	46,283
1	F dummy coupling	20,806

STANDARD QUICK-ACTION AUTOMATIC BRAKE FOR PASSENGER, BAGGAGE, MAIL, OR EXPRESS CARS

Schedule designation	PM-1,012	PM-1,212	PM-1,412	PM-1,612
Shipping weight, pounds	400	550	650	800
Brake cylinder, size	10″×12″	12″×12″	14″×12″	16″×12″
Auxiliary reservoir, size	12″×27″	12″×33″	14″×33″	16″×33″
Drain cock, size	¼ In.	¼ In.	¼ In.	½ In.
Triple valve, type	P-1	P-2	P-2	P-2
Details	*Piece Number*			
1 Type M brake cylinder with plain crosshead	1,502	1,506	1,530	1,971
1 Auxiliary reservoir	24,827	3,093	3,094	3,095
1 Drain cock	41,814	41,814	41,814	7,716
1 Quick-action triple valve	1,760	1,775	1,775	1,775
1 Triple-valve gasket	2,427	4,760	4,760	4,760

	Pc. No.
1 1-in. cut-out cock for branch pipe	2,135
1 1¼″×1¼″×1″ branch pipe tee	47,163
1 1-in. centrifugal dirt collector	36,454
1 C-3 conductor's valve	14,436
2 1¼″×1¼″ self-locking angle cocks	22,413
2 1⅜″×22″ hose with FP-5 couplings and 1¼-in. nipples	46,242
2 F dummy couplings	20,806

STANDARD, IMPROVED, AUTOMATIC, QUICK-ACTION, QUICK-SERVICE, GRADUATED-RELEASE, QUICK RECHARGE, HIGH EMERGENCY PRESSURE BRAKE FOR PASSENGER, BAGGAGE, MAIL, OR EXPRESS CARS

Schedule designation	LN-1,012	LN-1,212	LN-1,412	LN-1,612	LN-1,812
Shipping weight, pounds	600	750	900	1,100	1,500
Brake cylinder, size	10″×12″	12″×12″	14″×12″	16″×12″	18″×12″
Auxiliary reservoir, size	12″×27″	12″×33″	14″×33″	16″×33″	16″×42″
Drain cock, size	¼ In.	¼ In.	¼ In.	½ In.	½ In.
Supplementary reservoir, size	16″×33″	16″×48″	20½″×36″	20½″×48″	22½″×54″
Triple valve, type	L-1-B	L-2-A	L-2-A	L-3	L-3
Details	*Piece Number*				
1 Type N brake cylinder with plain crosshead	24,352	17,627	17,441	16,574	50,376
1 Auxiliary reservoir	24,827	3,093	3,094	3,095	3,096
1 Drain cock	41,814	41,814	41,814	7,716	7,716
1 Supplementary reservoir	3,095	13,220	23,384	23,385	27,505
1 Type L triple valve	16,101	15,500	15,500	16,370	16,370
1 Triple-valve gasket	8,969	9,356	9,356	12,794	12,794

		Pc. No.
1	½-in. drain cock	7,716
1	½-in. cut-out cock	15,213
1	1-in. cut-out cock	2,135
1	1¼″×1¼″×1″ branch pipe tee	47,163
1	1-in. centrifugal dirt collector	36,454
1	1-in. branch-pipe air strainer	9,523
1	C-3 conductor's valve	14,436
2	1¼″×1¼″ self-locking angle cocks	22,413
2	1⅜″×22″ hose with FP-5 couplings and 1¼-in. nipples	46,242
2	F dummy couplings	20,806

PC EQUIPMENTS FOR HEAVY PASSENGER, BAGGAGE, MAIL, OR EXPRESS CARS

Schedule designation	PC-2-14	PC-2-16	PC-2-18
Shipping weight, pounds	1,900	2,200	2,650
Brake cylinder (two), size	14″×12″	16″×12″	18″×12″
Service reservoir, size	16″×48″	20½″×36″	20½″×48″
Emergency reservoir, size	16″×42″	16″×48″	20½″×36″
Details	*Piece Number*		
2 Brake cylinders with slotted crossheads, less lever brackets	33,490	31,547	33,137
1 Service reservoir	33,139	33,133	22,872
1 Emergency reservoir	33,138	33,139	33,133

		Pc. No.
2	½-in. drain cocks	7,716
1	No. 3-E control valve	37,896
1	1-in. cut-out cock	2,135
1	1¼″×1¼″×1″ branch-pipe tee	47,163
1	1-in. centrifugal dirt collector	36,454
1	1-in. branch-pipe air strainer	9,523
1	C-3 conductor's valve	14,436
2	1¼″×1¼″ self-locking angle cocks	22,413
2	1⅜″×22″ hose with FP-5 couplings and 1¼-in. nipples	46,242
2	F dummy couplings	20,806

LOCOMOTIVE AIR-SIGNAL EQUIPMENTS

	J	L
Schedule designation	A-1, AD, AG	ET
For use with equipments	75	70
Shipping weight, pounds		
Fixtures	*Piece Number*	
1 Signal reducing valve	2,360	
1 ⅜-in. air strainer	3,272	
1 C-1-3-6 air strainer and check-valve		24,899

	Pc. No.
1 Signal valve	2,205
1 Signal whistle	2,804
2 ¾-in. cut-out cocks	2,233
4 ¾-in. angle fittings	2,237
4 1⅛″×22″ hose with HP-4 couplings and ¾-in. nipples	46,252
2 H dummy couplings	20,810

AIR-SIGNAL EQUIPMENTS FOR A PASSENGER, BAGGAGE, MAIL, OR EXPRESS CAR

	K
Schedule designation	PM, LN, PC
For use with equipments	45
Shipping weight, pounds	
Fixtures	*Pc. No.*
1 Car discharge valve	2,156
1 ½-in. cut-out cock	15,213
1 Signal-pipe air strainer	2,240
2 ¾-in. cut-out cocks	2,233
2 ¾-in. angle fittings	2,237
2 1⅛″×22″ hose with HP-4 couplings and ¾-in. nipples	46,252
2 H dummy couplings	20,810

STANDARD AUTOMATIC, QUICK-ACTION, QUICK-SERVICE, UNIFORM RELEASE, UNIFORM RECHARGE BRAKE FOR FREIGHT CARS

	Combined Type				Detached Type		
Schedule designation	KC-68	KC-88	KC-812	KC-1,012	KD-68	KD-812	KD-1,012
Shipping weight, pounds	250	275	325	425	275	325	450
Brake cylinder, size	6″×8″	8″×8″	8″×12″	10″×12″	6″×8″	8″×12″	10″×12″
Triple valve, type	K-1	K-1	K-1	K-2	K-1	K-1	K-2
Details	*Piece Number*						
1 Type C brake cylinder and auxiliary reservoir combined	47,840	2,557	2,438	23,733			
1 Type D brake cylinder (plain head)					2,566	2,447	4,868
1 Auxiliary reservoir					48,610	2,445	24,446
1 Triple valve (type K)	27,852	27,852	27,852	28,968	27,852	27,852	28,968
1 Triple-valve gasket	2,427	2,427	2,427	4,886	2,427	2,427	4,886

		Pc. No.
1	Release valve	2,416
1	Type 15-O pressure-retaining valve	2,449
1	1¼-in. cut-out cock for triple valve	2,092
1	1¼-in. centrifugal dirt collector	36,456
2	1¼-in. self-locking angle cocks	22,413
2	1⅜″×22″ hose with FP-5 couplings and 1¼-in. nipples	46,242

OLD STANDARD AUTOMATIC QUICK-ACTION BRAKE FOR FREIGHT CARS

	Combined Cylinder and Reservoir Type				Detached Cylinder and Reservoir Type		
Schedule designation	HC-68	HC-88	HC-812	HC-1,012	HD-68	HD-812	HD-1,012
Shipping weight, pounds	250	275	325	450	275	325	450
Brake cylinder, size	6″×8″	8″×8″	8″×12″	10″×12″	6″×8″	8″×12″	10″×12″
Triple valve, type	H-1	H-1	H-1	H-2	H-1	H-1	H-2
Details	*Piece Number*						
1 Type C brake cylinder and auxiliary reservoir combined	47,840	2,557	2,438	23,733			
1 Type D brake cylinder (plain head)					2,566	2,447	4,868
1 Type D auxiliary reservoir					48,610	2,445	24,446
1 Triple valve	1,717	1,717	1,717	4,870	1,717	1,717	4,870
1 Triple-valve gasket	2,427	2,427	2,427	4,886	2,427	2,427	4,886

		Pc. No.
1	Release valve	2,416
1	Type 15-O pressure-retaining valve	2,449
1	1¼-in. cut-out cock, for triple valve	2,092
1	1¼-in. centrifugal dirt collector	36,456
2	1¼-in. self-locking angle cocks	22,413
2	1⅜″×22″ hose with FP-5 couplings and 1¼-in. nipples	46,242

FREIGHT CAR BRAKE EQUIPMENTS, TWIN-CYLINDER TYPE. STANDARD AUTOMATIC, QUICK-ACTION, QUICK SERVICE, UNIFORM RELEASE, UNIFORM RECHARGE BRAKE EQUIPMENT, SCHEDULE KD-2-68. OLD STANDARD AUTOMATIC, QUICK-ACTION FREIGHT BRAKE EQUIPMENT, SCHEDULE HD-2-68.

Schedule designation	KD-2-68	HD-2-68
Shipping weight, pounds	350	350

Details	*Piece Number*	
1 Type H-1 triple valve		1,717
1 Type K-1 triple valve	27,852	

		Pc. No.
1	Triple-valve gasket	2,427
2	Type D 6″×8″ brake cylinders (plain head)	2,566
1	Type D auxiliary reservoir	2,445
1	Release valve	2,416
1	Type 15-O pressure-retaining valve	2,449
1	1¼-in. cut-out cock, for triple valve	2,092
1	1¼-in. centrifugal dirt collector	36,456
2	1¼-in. self-locking angle cocks	22,413
2	1⅜″×22″ hose with FP-5 couplings and 1¼-in. nipples	46,242

KCE EMPTY AND LOAD BRAKE FOR FREIGHT CARS

Schedule designation	KCE-88	KCE-810	KCE-108	KCE-1,010	KCE-1,012
Shipping weight, pounds	800	825	875	925	950
Brake cylinder, size	8″×12″	8″×12″	10″×12″	10″×12″	10″×12″
Load brake cylinder, size	8″×12″	10″×12″	8″×12″	10″×12″	12″×12″
Triple valve, type	K-1, L	K-1, L	K-2, L	K-2, L	K-2, L
Details	*Piece Number*				
1 Brake cylinder and four-compartment reservoir	41,384	41,384	46,006	46,006	46,006
1 Load brake cylinder with push rod and locking mechanism	41,386	38,409	41,386	38,409	
1 Triple valve	50,803	50,803	46,022	46,022	46,022
1 Triple-valve gasket	42,104	42,104	36,166	36,166	36,166
1 Type 10-20 pressure-retaining valve	43,691	43,691	43,692	43,692	43,692

		Pc. No.
1	¾-in. flange union	40,866
1	Reservoir release valve	2,416
1	H-3 change-over valve	46,199
1	H-3 change-over-valve gasket	38,050
1	Operating mechanism to suit installation	
1	1¼-in. centrifugal dirt collector	36,456
1	1¼-in. cut-out cock	2,090
2	1½-in. self-locking angle cocks	22,413
2	1⅜″×22″ hose with FP-5 couplings and 1¼-in. nipples	46,242

KDE EMPTY AND LOAD BRAKE FOR FREIGHT CARS

Schedule designation	KDE-88	KDE-810	KDE-108	KDE-1,010	KDE-1,012
Shipping weight, pounds	775	950	1,025	1,075	1,225
Brake cylinder, size	8″×12″	8″×12″	10″×12″	10″×12″	10″×12″
Load brake cylinder, size	8″×12″	10″×12″	8″×12″	10″×12″	12″×12″
Triple valve, type	K-1, L	K-1, L	K-2, L	K-2, L	K-2, L
Details	*Piece Number*				
1 Brake cylinder, detached	2,447	2,447	4,868	4,868	4,868
1 Four-compartment reservoir	43,803	43,803	46,108	46,108	46,108
1 Load brake cylinder with push rod and locking mechanism	41,386	38,409	41,386	38,409	
1 Triple valve	50,803	50,803	46,022	46,022	46,022
1 Triple-valve gasket	42,104	42,104	36,166	36,166	36,166
1 Type 10-20 pressure-retaining valve	43,691	43,691	43,692	43,692	43,692

		Pc. No.
1	1-in. flange union	40,867
1	¾-in. flange union	40,866
1	Reservoir release valve	2,416
1	H-3 change-over valve	46,199
1	H-3 change-over-valve gasket	38,050
1	Operating mechanism to suit installation	
1	1¼-in. centrifugal dirt collector	36,456
1	1¼-in. cut-out cock	2,090
2	1½-in. self-locking angle cocks	22,413
2	1⅜″×22″ hose with FP-5 couplings and 1¼-in. nipples	46,242

SCHEDULE OF LOCOMOTIVE BRAKE CYLINDERS, FOR A-1, AD, AND AG EQUIPMENTS

Driver-Brake Cylinder					Auxiliary Reservoir		Drain Cock		Triple Valve	
Type	Size, Inches		No.	Piece Number Cylinder Complete	Size Inches	Piece No.	Size Inches	Piece No.	Size	Piece No.
	Dia.	Stroke								
B	6	8	48-B	8,618	10×24	3,091	¼	41,814	F-1	4,233
B	8	6	33-B	1,148	10×33	3,092	¼	41,814	F-1	4,233
B	8	7	11-B	1,134	10×33	3,092	¼	41,814	F-1	4,233
B	8	12	43-B	6,236	10×33	3,092	¼	41,814	F-1	4,233
B	10	6	51-B	9,687	12×33	3,093	¼	41,814	F-1	4,233
B	10	8	55-B	1,115	12×33	3,093	¼	41,814	F-1	4,233
B	10	10	35-B	1,120	12×33	3,093	¼	41,814	F-1	4,233
B	10	12	99-B	1,101	12×33	3,093	¼	41,814	F-1	4,233
B	12	8	13-B	7,318	14×33	3,094	¼	41,814	F-2	1,826
B	12	10	15-B	7,339	14×33	3,094	¼	41,814	F-2	1,826
B	12	12	39-B	7,378	14×33	3,094	¼	41,814	F-2	1,826
B	14	10	21-B	7,203	16×33	3,095	½	7,716	F-2	1,826
B	14	12	42-B	7,260	16×33	3,095	½	7,716	F-2	1,826
B	16	10	101-B	22,038	16×42	3,096	½	7,716	F-2	1,826
B	16	12	47-B	7,447	16×42	3,096	½	7,716	F-2	1,826
C	8	6	33-C	1,207	10×33	3,092	¼	41,814	F-1	4,233
C	8	7	11-C	4,847	10×33	3,092	¼	41,814	F-1	4,233
C	10	6	30-C	1,192	12×33	3,093	¼	41,814	F-1	4,233
C	10	8	55-C	1,198	12×33	3,093	¼	41,814	F-1	4,233
C	10	10	35-C	1,184	12×33	3,093	¼	41,814	F-1	4,233

C	10	12	99-C	1,204	12×33	3,095	¼	41,814	F-1	4,233
C	12	8	13-C	1,169	14×33	3,094	¼	41,814	F-2	1,826
C	12	10	15-C	1,175	14×33	3,094	¼	41,814	F-2	1,826
C	12	12	39-C	1,179	14×33	3,094	¼	41,814	F-2	1,826
C	14	10	21-C	1,258	16×33	3,095	½	7,716	F-2	1,826
C	14	12	42-C	1,265	16×33	3,095	½	7,716	F-2	1,826
Push down	6	6	66	2,529	10×24	3,091	¼	41,814	F-1	4,233
Push down	6	8	48	1,972	10×24	3,091	¼	41,814	F-1	4,233
Push down	8	6	33	1,358	10×33	3,092	¼	41,814	F-1	4,233
Push down	8	7	11	1,311	10×33	3,092	¼	41,814	F-1	4,233
Push down	10	6	30	1,333	12×33	3,093	¼	41,814	F-1	4,233
Push down	10	8	55	1,339	12×33	3,093	¼	41,814	F-1	4,233
Push down	10	10	35	1,342	12×33	3,093	¼	41,814	F-1	4,233
Push down	10	12	99	1,345	12×33	3,093	¼	41,814	F-1	4,233
Push down	12	8	13	1,319	14×33	3,094	¼	41,814	F-2	1,826
Push down	12	10	15	1,325	14×33	3,094	¼	41,814	F-2	1,826
Push down	12	12	39	1,329	14×33	3,094	¼	41,814	F-2	1,826
Push down	14	10		1,354	16×33	3,095	½	7,716	F-2	1,826
Push down	14	12	42	1,348	16×33	3,095	½	7,716	F-2	1,826
Truck Brake Cylinder										
	6	8	48-D	9,729	10×14½	24,408	¼	41,814		
	8	7	11-D	40,815	10×20	24,825	¼	41,814		
	8	12	43-D	1,964	10×20	24,825	¼	41,814		
	10	8	55-D	40,825	10×28	24,826	¼	41,814		
	10	10	35-D	40,827	10×28	24,826	¼	41,814		
	10	12	99-D	40,829	10×28	24,826	¼	41,814		
	12	8	13-D	7,551	12×27	24,827	¼	41,814		
	12	12	39-D	40,831	12×27	24,827	¼	41,814		

FOR NO. 6 ET EQUIPMENT

The Schedule of Locomotive Brake Cylinders also shows driver- and truck-brake cylinders suitable for use with No. 6 ET equipment, no auxiliary reservoir, drain cock, and triple valve reference being required.

Tender-brake cylinders vary with the weight on tender wheels, according to the following schedule of sizes:

Type	Diameter Inches	Stroke Inches	Piece No. Complete	Type	Diameter Inches	Stroke Inches	Piece No. Complete
K	8	12	12,990	L	8	12	12,989
K	10	12	12,992	L	10	12	12,991
K	12	12	12,994	L	12	12	12,993
K	14	12	12,996	L	14	12	12,995
K	16	12	13,182	L	16	12	13,108

AIR COMPRESSORS

TYPES OF COMPRESSORS

INTRODUCTION

The first air compressor employed in connection with air brakes, was a Cameron, steam-driven water pump, in which the hydraulic cylinder was replaced by an air cylinder. This pump demonstrated the practicability of operating brakes by means of compressed air. The 6-in. compressor was the first successful air compressor operated by steam that was furnished as a part of the air-brake system. This type served its purpose for several years, when the demand for greater pump capacity brought forth the 8-in. compressor as its successor. This provided sufficient pump capacity for a considerable period, but eventually was succeeded by the 9½-in. compressor. Still further demand for increased capacity brought out the 11-in. compressor, and later, the 8½-in. cross-compound compressor. The success of this cross-compound compressor in air-brake service, was such that a larger compressor of the same type, known as the 10½-in. cross-compound compressor, was designed for industrial service. The original 8-in. air compressor, now obsolete, was an 8″×7½″×9″ air compressor. This means that it had an 8-in. steam cylinder, a 7½-in. air cylinder, and a 9-in. stroke. The valve mechanism was in the side of the steam cylinder instead of in the top cylinder head. The new standard 8-in. compressor is an 8″×8″×10″ compressor, and has the same style of valve mechanism as the 9½-in. and the 11-in. compressors.

8-IN. AIR COMPRESSOR

The new standard 8″×8″×10″ air compressor is shown in Fig. 1; the view (*a*) being a side view showing a vertical cross-sectional view of the main valve and bushing, and the other a vertical sectional view of the compressor showing the back half. The compressor weighs 450 lb. The lift of the air valves is $\frac{3}{32}$-in. for all valves.

When ordering this compressor or ordinary parts of one, the piece number, reference number, and name of the part wanted should always be given. The piece number of a 8″×8″×10″ air compressor complete is 11,379; the numbers of the various parts are given in the accompanying list.

Pc. No.	*Ref. No.*	*Name of Part*
11,380	2	Top head, complete, includes one each 14, 15, 16, 17, 18, 25, 26, 27, 28, 29, eight of 48.
11,382	3	Steam cylinder, complete, includes one each 34, 35, 36, 37, 38, 58, 59, two each 57, 60, four of 61.
11,384	4	Center piece, complete, includes one each ¼-in. pipe plug and 55, two each of 40, 41, 42.
11,383	5	Air cylinder, complete, includes one each 34, 35, 36, 53, two each 31, 32, 33, four of 30.
11,385	6	Lower head, includes 54.
*11,387	7	Steam piston and rod, includes one of 11 and two each of 9, 10, and 12.
7,255	8	Air piston, includes two of 80.
4,629	9	Piston ring.
1,557	10	Piston-rod nut.
1,925	11	Reversing-valve plate.
12,068	12	Reversing-valve-plate bolt.
1,928	13	Reversing-valve rod.
1,868	14	Reversing valve.
31,253	15	Reversing-valve-chamber bush.
1,869	16	Reversing-valve-chamber-cap.
31,251	17	Main-valve bush.
2,194	18	Main-valve pistons and stem, complete, includes 19, 21, 23, and four of 24.
5,167	19	Large main-valve piston, includes two of 20.
1,865	20	Large main-valve piston ring.
5,168	21	Small main-valve piston, includes two of 22.
1,866	22	Small main-valve-piston ring.
1,861	23	Main-valve stem.
1,864	24	Main-valve-stem nut.
1,867	25	Main valve.
1,873	26	Right main-valve cylinder head.
5,166	27	Left main-valve cylinder head.
1,876	28	Right main-valve head gasket.

*Piece No. 11,387 covers steam piston with standard steel rod. If piston with chrome vanadium steel rod is desired, specify Piece No. 24,583.

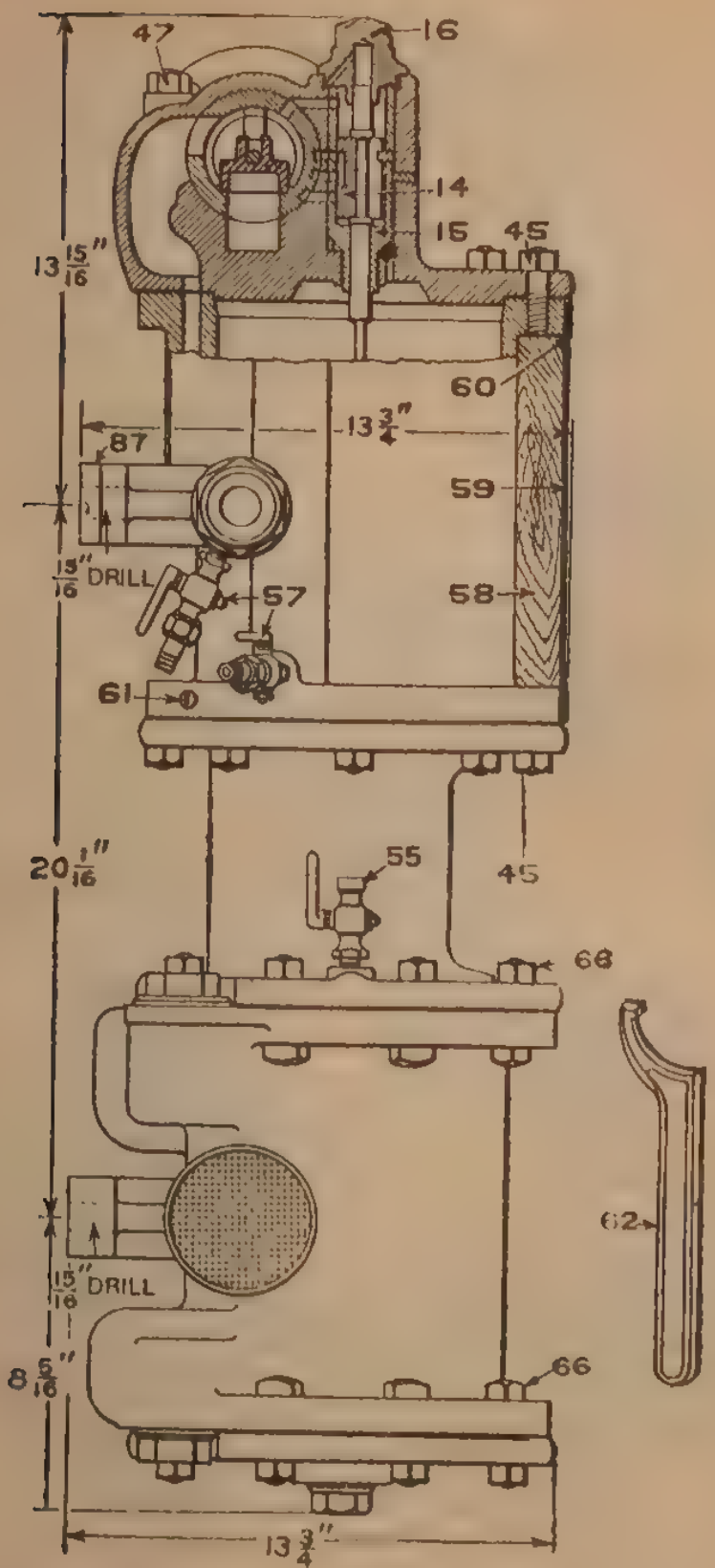
47
16
14
15
45
13 15/16"
60
13 3/4"
87
59
15/16" DRILL
57
58
61
20 1/16"
55
45
66
62
15/16" DRILL
8 5/16"
66
13 3/4"

(a)

FIG. 1

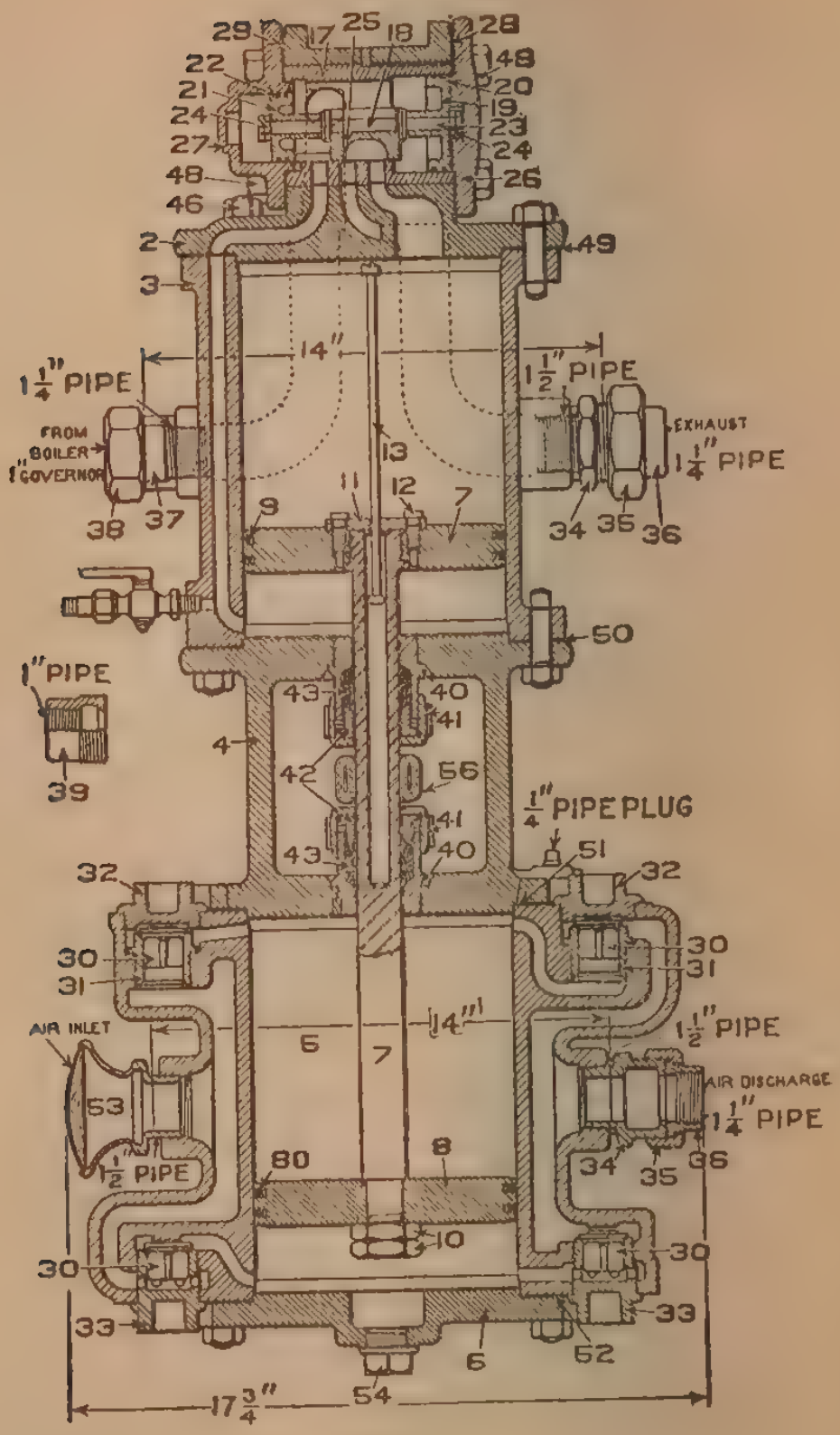
29
17
25
18
28
22
148
21
20
24
19
23
27
24
48
26
46
2
49
3
14"
1 1/4" PIPE
1 1/2" PIPE
FROM BOILER
1" GOVERNOR
EXHAUST
1 1/4" PIPE
13
11
12
7
9
38
37
34
35
36
50
1" PIPE
43
40
41
4
42
56
39
1/4" PIPE PLUG
41
43
40
51
32
32
30
30
31
31
AIR INLET
14"
1 1/2" PIPE
5
7
AIR DISCHARGE
53
1 1/4" PIPE
1 1/2" PIPE
80
8
34
35
36
10
30
30
33
33
6
52
54
17 3/4"

(b)

FIG. 1

Pc. No.	*Ref. No.*	*Name of Part*
1,877	29	Left main-valve head gasket.
31,388	30	Air valve.
8,795	31	Air-valve seat.
7,076	32	Air-valve cap.
7,073	33	Air-valve cage.
1,882	34	$1\frac{1}{4}$-in. union stud.
1,883	35	$1\frac{1}{4}$-in. union nut.
1,884	36	$1\frac{1}{4}$-in. union swivel.
1,885	37	1-in. steam-pipe stud.
1,886	38	Governor-union nut.
*1,950	39	1-in. steam-pipe sleeve.
1,912	40	Stuffingbox.
1,914	41	Stuffingbox nut.
1,913	42	Stuffingbox gland.
2,090	43	Piston-rod packing (vulcabeston), set (sufficient for two stuffingboxes).
1,635		$\frac{1}{4}$-in. pipe plug.
24,937	45	$\frac{5}{8}$ in. $\times 2\frac{3}{8}$ in. T-head bolt and nut.
13,172	46	$\frac{5}{8}$ in. $\times 2\frac{7}{8}$ in. T-head bolt and nut.
13,170	47	$\frac{5}{8}$ in. $\times 7\frac{1}{4}$ in. T-head bolt and nut.
1,878	48	$\frac{5}{8}$ in. $\times 1\frac{1}{4}$ in. main-valve head capscrew.
11,389	49	Upper steam-cylinder gasket.
11,390	50	Lower steam-cylinder gasket.
11,391	51	Upper air-cylinder gasket.
11,391	52	Lower air-cylinder gasket.
12,659	53	Air strainer.
1,919	54	Cylinder-head plug.
*1,916	55	Oil cock.
15,038	56	Piston-rod swab.
1,887	57	Drain cock.
13,168	58	Steam-cylinder lagging set.
13,166	59	Steam-cylinder jacket.
13,167	60	Steam-cylinder-jacket bands.
1,898	61	Jacket-band screw, $\frac{5}{16}$ in. $\times \frac{7}{16}$ in.
15,551	62	Packing-nut wrench.
24,937	66	T-head bolt and nut, $\frac{5}{8}$ in. $\times 2\frac{3}{8}$ in.
4,629	80	Air-piston ping.

The list given applies only to standard 8-in. air compressor having air cylinder 8 in. in diameter. Orders for repair parts for special 8-in. compressors having air cylinder other than 8 in. in diameter, or with water-jacket, should omit piece number, but give reference number, name of piece, and either diameter of air cylinder or serial number on name plate of compressor.

* Furnished only when specially ordered, when governor is not to be attached directly to compressor.

When this compressor is ordered complete, for industrial, or other than railroad-brake service, order should so state, and specify Piece No. 19,392. When so ordered, packing and cap-nut wrench, Piece No. 1,935 (instead of Piece No. 15,551), air-valve-seat wrench, Piece No. 7,188, air-valve-cage wrench, Piece No. 7,189, and wrench for ⅝-in. nuts, Piece No. 11,392, are included with the compressor without extra charge.

Operation of Steam Cylinder. When the pump is at rest, the pistons generally settle to the bottom of their cylinders and the reversing plate strikes against the button on the reversing rod and pulls the reversing valve into lowest position. When steam is admitted to the pump, it enters the main-valve bushing, and, as the area of the large piston is greater than that of the small piston, forces the main valve to the right, passes into the cylinder below the piston, and forces the piston upwards. Any steam above the piston will exhaust to the atmosphere through the exhaust pipe. As the steam piston nears the end of its upward stroke, the top of the reversing plate strikes the shoulder on the reversing rod and forces the reversing valve upwards. This permits steam to enter the chamber at the right of the large piston and balance the pressure on the piston *20* of the main valve, and the pressure on this piston *20* then forces the main valve and the slide valve to the left until the cavity of the slide valve connects the steam to the lower end of the cylinder port with the exhaust port. The steam port to the upper end of the cylinder is uncovered and steam flows into the steam cylinder above the steam piston, forcing the piston downwards. The steam below the piston flows through the steam ports and the cavity in the slide valve, and out of the exhaust. As the piston nears the end of its downward stroke, the bottom of the reversing plate strikes the button on the reversing rod and pulls the rod and reversing valve to their lowest positions. This movement exhausts the steam from the chamber to the right of the piston *20* and allows the main valve to move the slide valve to the right, thus permitting steam to pass underneath the piston and force it upwards.

Operation of Air Cylinder. -When the air piston makes an upward stroke, it produces a partial vacuum below it, while

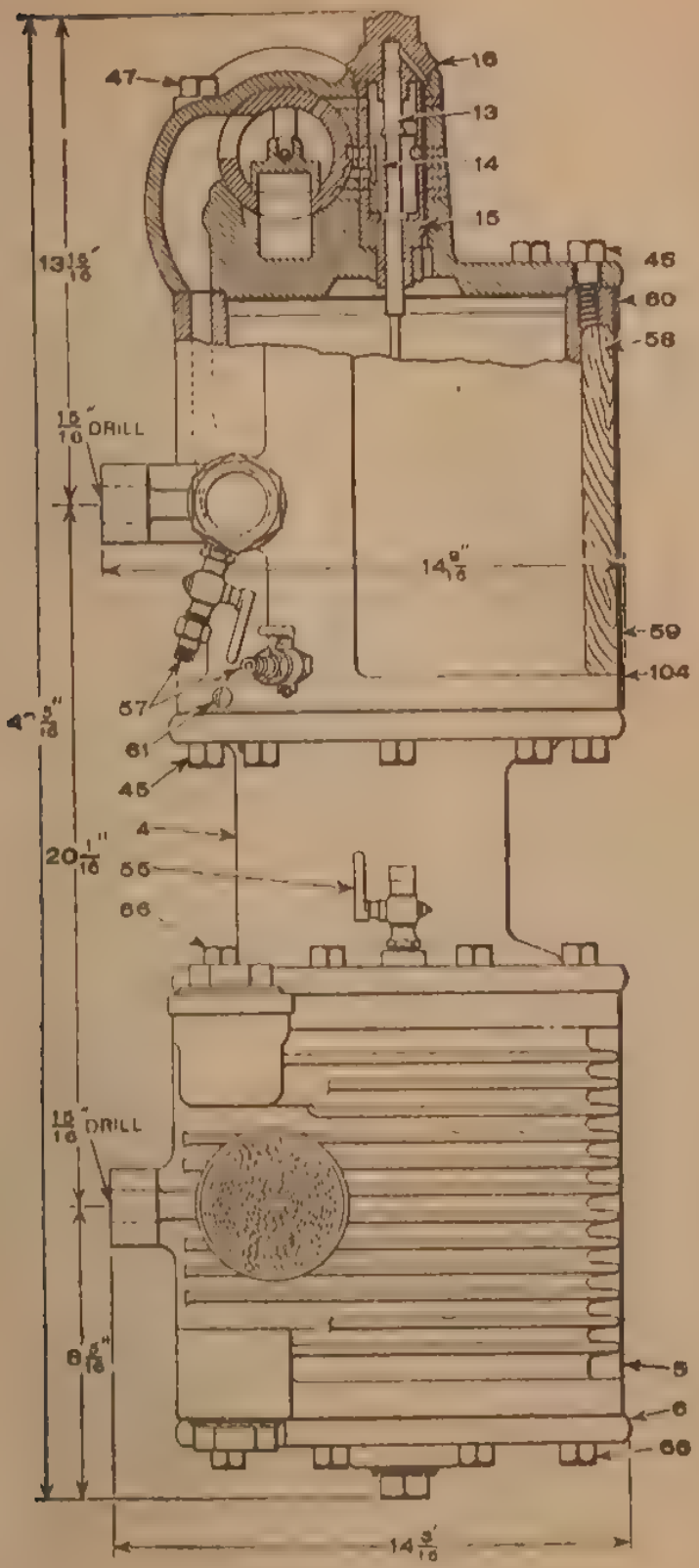
47
16
13
14
15
46
60
58
13 15/16"
15/16" DRILL
14 9/16"
59
104
57
61
45
4
20 1/16"
55
66
15/16" DRILL
8 5/16"
5
6
66
14 9/16"

FIG. 2 (*a*)

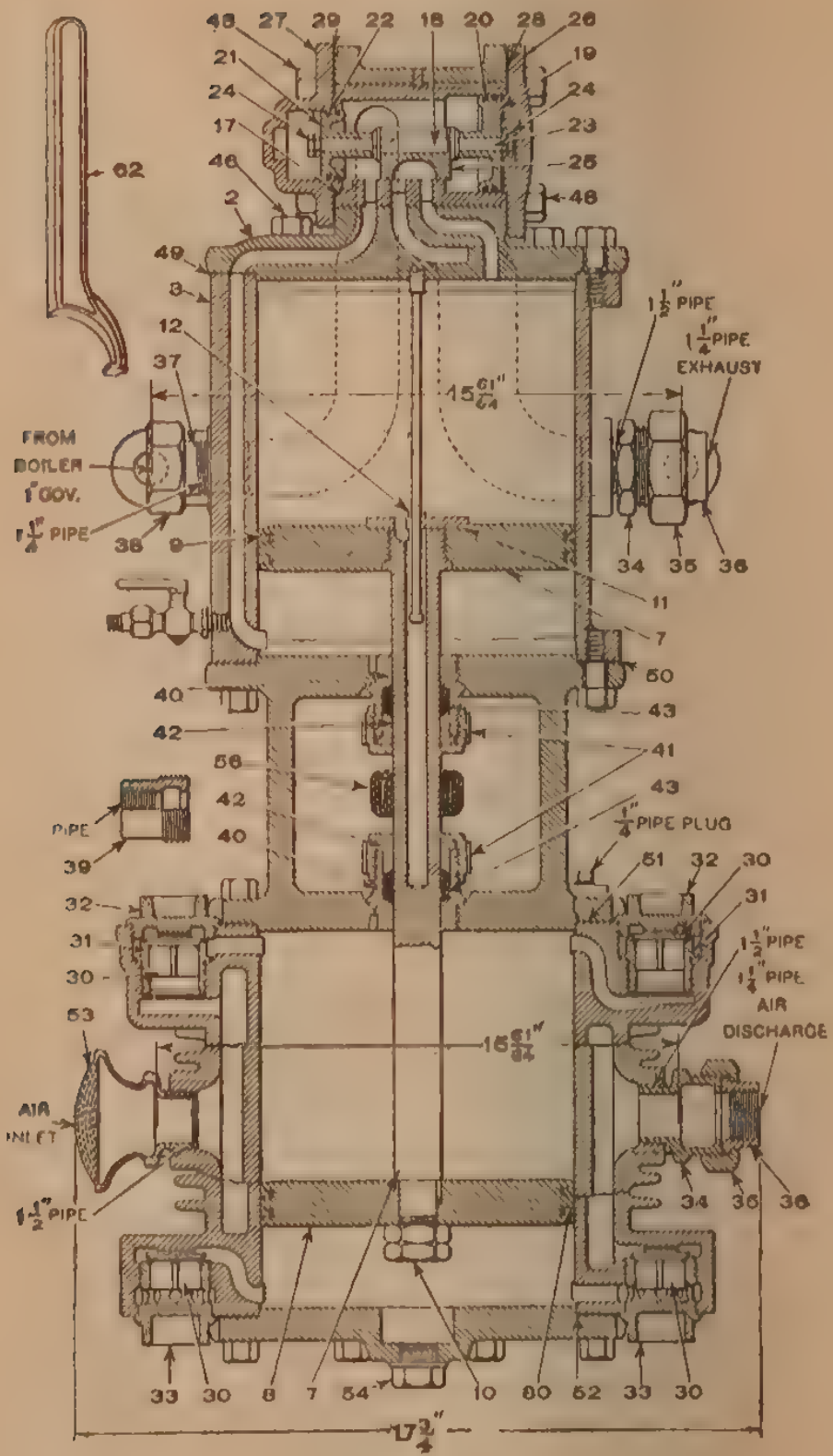
48 27 29 22 18 20 28 26
21
19
24
24
17
23
46
25
2
48
62
49
3
12
37
1½" PIPE
1¼" PIPE
EXHAUST
15 61/64"
FROM
BOILER
1" GOV.
1¼" PIPE
38
9
34 35 36
11
7
50
40
43
42
41
56
43
42
40
1/4" PIPE PLUG
PIPE
39
51 32 30
32
31
31
30
1½" PIPE
1¼" PIPE
AIR
DISCHARGE
53
15 61/64"
AIR
INLET
1½" PIPE
34 35 36
33 30 8 7 54 10 60 52 33 30
17¾"

FIG. 2 (*b*)

the air above is compressed. Air then flows in through the screened air inlet and passes downwards through the receiving valve into the lower end of the air cylinder, filling it with air at atmospheric pressure. The air that is compressed above the piston holds the receiving valve on its seat, and passes out through the discharge valve to the main reservoir. On the downward stroke of the air piston, a partial vacuum is formed above, and the air is compressed below it. Air then flows in through the air inlet, passes through the receiving valve, and fills the upper part of the cylinder with air at atmospheric pressure. As the air is compressed below the piston, it holds the receiving valve on its seat and passes out through the discharge valve to the main reservoir.

9½-IN. AIR COMPRESSOR

The 9½″×9½″×10″ compressor, Fig. 2, is made in two styles, *right-handed*, and *right-and-left-handed*. The latter is furnished only when specially ordered. The compressor weighs 550 lb., the lift of all air valves is $\frac{3}{32}$ in., and the capacity is 49 cu. ft. at 120 single strokes per minute. The operation is the same as the operation of the 8-in. compressor. Normal speed, 120 single strokes per minute. When ordering, the piece number, reference number, and name of the part wanted should always be given. The piece number of a right-hand 9½-in. air compressor complete is 51,477; of a right-and-left-hand 9½-in. air compressor complete, it is 51,496. The numbers of the various parts are given in the accompanying list.

Pc. No.	*Ref. No.*	*Name of Part*
1,853	2	Top head, complete, includes one each of 14, 15, 16, 17, 18, 25, 26, 27, 28, 29, 46, eight of 48.
* 1,880	3	Steam cylinder, complete, includes one each of 34, 35, 36, 37, 38, 58, 59, 104, three of 57, four of 61, ¼-in. pipe plug and ½-in. pipe plug.
†1,958	3	Steam cylinder, complete, includes one each of 34, 35, 36, 37, 38, 58, 59, 60, 104, two of 57, four of 61.
1,910	4	Center piece, complete, includes one of 55, two each of 40, 41, 42.

*For right-hand compressor.
†For right-and-left-hand compressor.

Pc. No.	Ref. No.	Name of Part
1,901	5	Air cylinder, complete, includes one each of 34, 35, 36, 53, two each of 31, 32, 33, four of 30.
5,165	6	Lower head, includes 54.
*51,480	7	Steam piston and rod, includes 11, and two each of 9, 10, and 12.
	8	Air piston, includes two of 80.
	9	or 80, Piston ring.
1,557	10	Piston-rod nut.
1,925	11	Reversing-valve plate.
12,068	12	Reversing-valve-plate bolt.
1,928	13	Reversing-valve rod.
1,868	14	Reversing valve.
31,253	15	Reversing-valve-chamber bush.
1,869	16	Reversing-valve-chamber cap.
31,251	17	Main-valve bush.
	18	Main-valve pistons and stem, complete, includes 19, 21, 23, and four of 24.
	19	Large main-valve piston, includes two of 20.
	20	Large main-valve-piston ring.
	21	Small main-valve piston, includes two of 22.
	22	Small main-valve piston ring
1,861	23	Main-valve stem.
1,864	24	Main-valve-stem nut.
1,867	25	Main slide valve
1,873	26	Right main-valve cylinder head.
5,166	27	Left main-valve cylinder head.
1,876	28	Right main-valve head gasket.
1,877	29	Left main-valve head gasket.
24,396	30	Air valve.
8,430	31	Air-valve seat.
1,906	32	Air-valve cap.
1,904	33	Air-valve cage.
1,882	34	1¼-in. union stud.
1,883	35	1¼-in. union nut.
1,884	36	1¼-in. union swivel.
1,885	37	1-in. steam-pipe stud.
1,886	38	Governor-union nut.
†1,950	39	1-in. steam-pipe sleeve
1,912	40	Stuffingbox.
51,344	41	Stuffingbox nut.
1,913	42	Stuffingbox gland.

*Piece No. 51,480 covers steam piston with standard steel rod. If steam piston with chrome vanadium steel rod is desired, orders should so specify and Piece No. 51,526, will be furnished for this item, but at an additional charge.

†Furnished only when specially ordered, when governor is not to be attached directly to compressor.

Pc. No.	Ref. No.	Name of Part
2,090	43	Piston-rod packing (Vulcabeston) set (sufficient for two stuffingboxes).
1,933	45	Capscrew, $\frac{5}{8}$ in. $\times 1\frac{5}{8}$ in.
1,879	46	Capscrew, $\frac{5}{8}$ in. $\times 2$ in.
1,934	47	Capscrew, $\frac{5}{8}$ in. $\times 6\frac{1}{4}$ in.
1,878	48	Main-valve head capscrew, $\frac{5}{8}$ in. $\times 1\frac{1}{4}$ in.
1,929	49	Upper steam-cylinder gasket.
1,930	50	Lower steam-cylinder gasket.
1,931	51	Upper air-cylinder gasket.
1,930	52	Lower air-cylinder gasket.
†12,659	53	Air strainer.
1,919	54	Cylinder-head plug.
1,916	55	Oil cock.
15,038	56	Piston-rod swab.
1,887	57	Drain cock.
†1,897	58	Steam-cylinder lagging set.
*1,962	58	Steam-cylinder lagging set.
1,894	59	Steam-cylinder jacket.
†1,895	60	Upper steam-cylinder-jacket band.
*1,961	60	Upper steam-cylinder-jacket band.
1,898	61	Jacket-band screws, $\frac{5}{16}$ in. $\times \frac{7}{16}$ in.
15,551	62	Packing-nut wrench.
†8,728		$1\frac{1}{4}$-in. pipe plug.
*8,727		$1\frac{1}{2}$-in. pipe plug.
1,933	66	Capscrew, $\frac{5}{8}$ in. $\times 1\frac{5}{8}$ in.
*1,896	104	Lower steam-cylinder jacket band.
†1,961	104	Lower steam-cylinder jacket band.

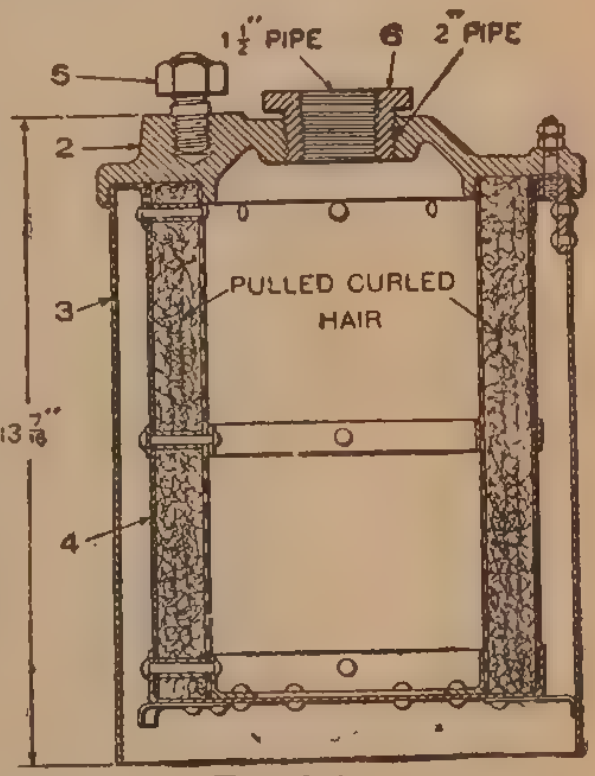

FIG. 2 (c)

Right-and-left-hand $9\frac{1}{2}$-in. compressor arranged with double steam and exhaust connections may be ordered.

When a suction strainer of greater capacity than that regularly included with the compressor is desired, order the strainer, Piece No. 54,780. Net weight of strainer, 23 lb.,

†For right-hand compressor.
*For right-and-left-hand compressor.

including 15 oz. pulled curled hair. Names of parts: 52,693-2, head complete, includes two of 53,694-3 shell, 56,603-4 strainer case, 27,906-5 $\frac{3}{4}'' \times 2\frac{1}{4}''$ stud and nut, 54,781-6 $2'' \times 1\frac{1}{2}''$ bushing.

This strainer, Fig. 2 (*c*), with No. 6 omitted may be used with the $8\frac{1}{2}$-in. cross-compound compressor.

11-IN. AIR COMPRESSOR

The pump shown in Fig. 3 is a $11'' \times 11'' \times 12''$ compressor. It is of the same construction as the 8-in. and $9\frac{1}{2}$-in. pumps and operates in the same manner. The compressor weighs 850 lb. All air valves have a lift of $\frac{3}{32}$ in.

When ordering this compressor or ordinary parts of one, the piece number, reference number, and name of the part wanted should always be given. The piece number of the 11-in. air compressor complete is 3,679; the numbers of the various parts are given in the accompanying list.

Pc. No.	*Ref. No.*	*Name of Part*
3,648	2	Top head, complete, includes one each of 14, 15, 16, 17, 18, 25, 26, 27, 28, 29, 82, ten of 48.
3,649	3	Steam cylinder, complete, includes one each of 101, 102, 57, 58, 59, 103, 37, 38, two of 60, four of 61, $1\frac{1}{4}$-in. pipe plug, and 2-in. pipe plug.
3,650	4	Center piece, complete, includes one of 55, two each of 40, 41, 42, and 57.
3,653	5	Air cylinder, complete, includes one each of 34, 35, 36, 53, two each of 31, 33, 32, four of 30.
5,170	6	Lower head, includes 112.
*51,473	7	Steam piston and rod, includes one each of 10, 11, 79, 81, two of 9, and three of 12.
	8	Air piston, includes two of 80.
	9	or 80, Piston ring.
1,590	10	Piston-rod nut.
1,688	11	Reversing-valve plate.
12,065	12	Reversing-valve-plate bolt.
1,709	13	Reversing-valve rod.
1,706	14	Reversing valve.
31,404	15	Reversing-valve-chamber bush.
1,710	16	Reversing-valve-chamber cap.
31,402	17	Main-valve bush.
	18	Main-valve pistons and stem, complete, includes one each of 19, 21, 23, and four of 24.

*Piece No. 51,473 covers steam piston with standard steel rod. If piston with chrome vanadium steel rod is desired, order Piece No. 24,585, but at additional price.

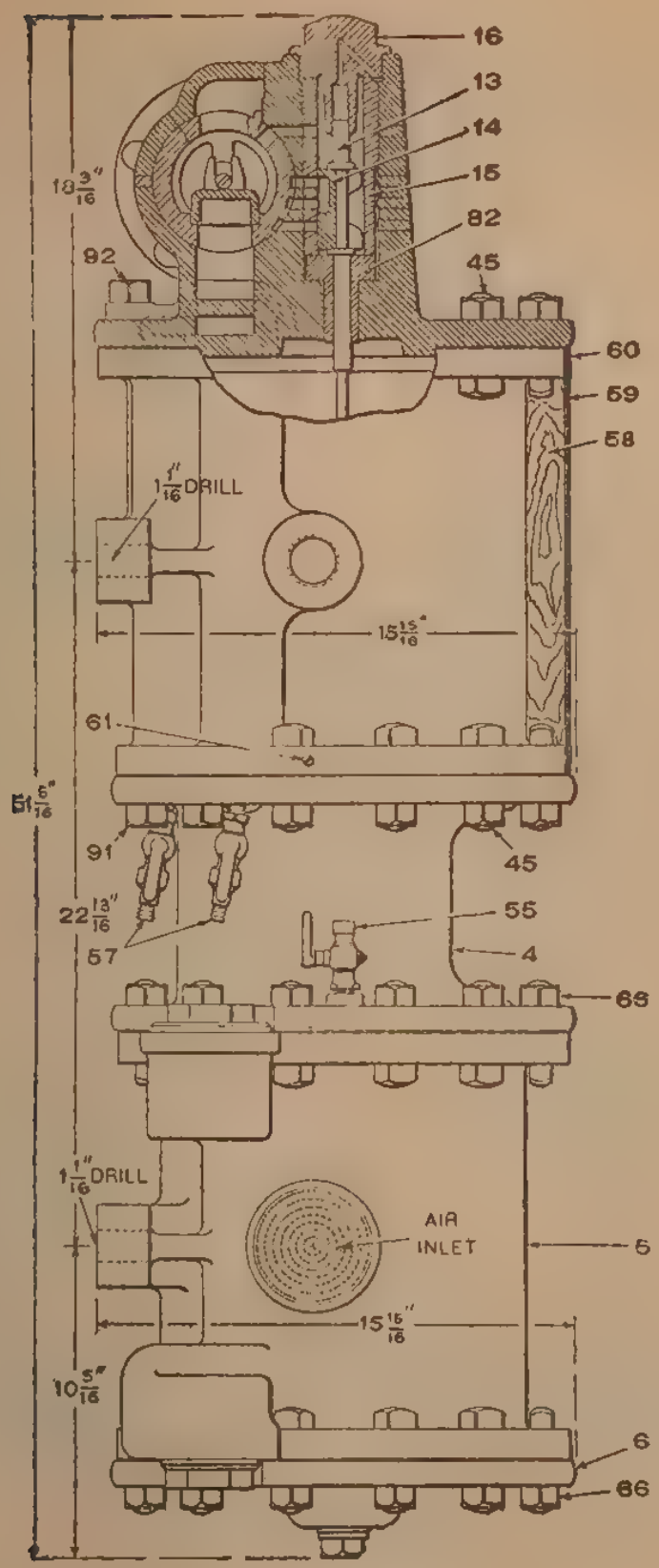
16
13
14
15
82
45
92
60
59
58
$18\frac{3}{16}''$
$1\frac{1}{16}''$ DRILL
$15\frac{15}{16}''$
61
$51\frac{5}{16}''$
91
45
$22\frac{13}{16}''$
55
57
4
63
$1\frac{1}{16}''$ DRILL
AIR INLET
5
$15\frac{15}{16}''$
$10\frac{5}{16}''$
6
66

FIG. 3 (*a*)

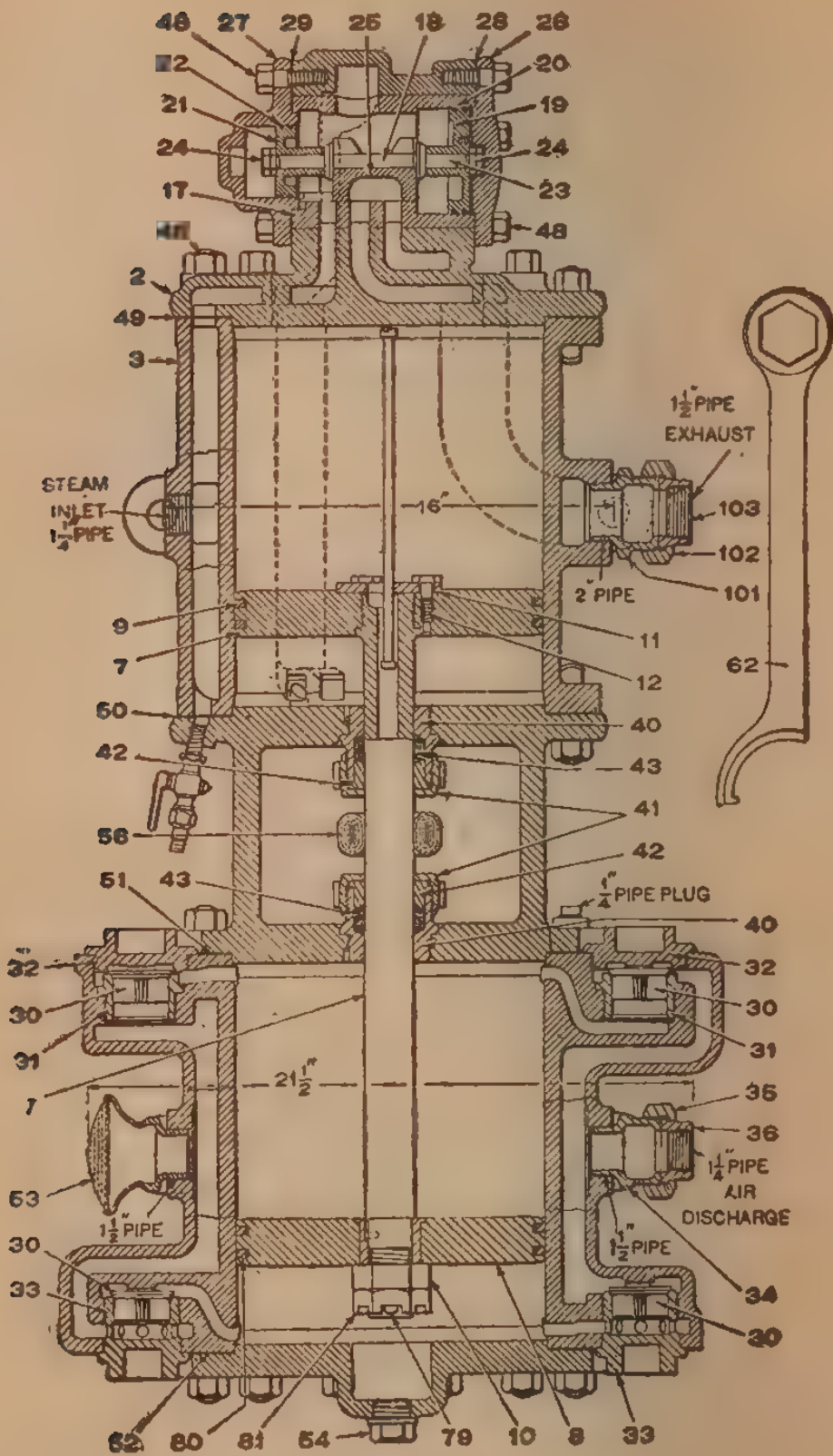
46
27
29
25
18
28
26
22
20
21
19
24
24
17
23
48
2
49
3
1½" PIPE
EXHAUST
STEAM
INLET
1¼" PIPE
16"
103
102
101
2" PIPE
9
11
7
12
62
50
40
42
43
41
56
42
51
43
¼" PIPE PLUG
40
32
32
30
30
31
31
7
21½"
35
36
1¼" PIPE
AIR
DISCHARGE
53
1½" PIPE
1½" PIPE
30
33
34
30
62
80
81
54
79
10
8
33

FIG. 3 (*b*)

Pc. No.	Ref. No.	Name of Part
	19	Large main-valve piston, includes two of 20.
	20	Large main-valve piston ring.
	21	Small main-valve piston, includes two of 22
	22	Small main-valve piston ring.
1,696	23	Main-valve stem.
2,052	24	Main-valve-stem nut.
1,707	25	Main slide valve.
1,599	26	Right main-valve cylinder head.
5,169	27	Left main-valve cylinder head.
1,716	28	Right main-valve head gasket.
1,715	29	Left main-valve head gasket.
29,177	30	Air valve.
8,269	31	Air-valve seat.
1,697	32	Air-valve cap.
1,708	33	Air-valve cage.
1,882	34	Air-discharge stud.
1,883	35	Air-discharge union nut.
1,884	36	Air-discharge union swivel.
1,885	37	1-in. steam-pipe stud.
1,886	38	Governor-union nut.
*1,950	39	1-in. steam-pipe sleeve.
1,702	40	Stuffingbox.
51,343	41	Stuffingbox nut.
1,703	42	Stuffingbox gland.
4,862	43	Piston-rod packing (Vulcabeston) set (sufficient for two stuffingboxes).
1,711	44	Upper steam-cylinder gasket.
3,661	45	Short T-head bolt, $\frac{3}{4}$ in.$\times 2\frac{5}{8}$ in., and hexagon nut.
3,662	46	Long T-head bolt, $\frac{3}{4}$ in.$\times 3\frac{1}{4}$ in., and hexagon nut.
1,759	48	Main-valve-head capscrew, $\frac{5}{8}$ in.$\times 1\frac{1}{2}$ in.
1,712	50	Lower steam-cylinder gasket.
1,713	51	Upper air-cylinder gasket.
1,714	52	Lower air-cylinder gasket.
12,659	53	Air strainer.
1,919	54	Cylinder-head plug.
1,916	55	Oil cock.
17,582	56	Piston-rod swab.
1,887	57	Drain cock.
9,584	58	Steam-cylinder lagging set.
9,582	59	Steam-cylinder jacket.
9,583	60	Steam-cylinder-jacket band.
1,898	61	Jacket-band screw, $\frac{5}{16}$ in.$\times \frac{7}{16}$ in.
15,496	62	Packing-nut wrench.
3,661	66	T-head bolt, and nut, $\frac{3}{4}$ in.$\times 2\frac{5}{8}$ in.
1,589	79	Piston-rod cotter.
1,591	81	Piston-rod jam nut.

*Furnished only when specially ordered, when governor is not to be attached directly to compressor.

Pc. No.	*Ref. No.*	*Name of Part*
31,405	82	Reversing-valve-rod bush.
3,269	91	Short capscrew, $\frac{3}{4}$ in.$\times$2 in.
3,270	92	Long capscrew, $\frac{3}{4}$ in.$\times 2\frac{5}{8}$ in.
2,682	101	Exhaust stud.
2,684	102	Exhaust-union nut.
2,683	103	Exhaust-union swivel.
8,728		$1\frac{1}{4}$-in. pipe plug.
8,726		2-in. pipe plug.

Standard 11-in. air compressor has steam- and exhaust-pipe connections similiar to those of the so-called right-and-left hand $9\frac{1}{2}$-in. compressor, and it can therefore be installed on either side of the locomotive with equal facility.

The list given applies only to standard 11-in. air compressor having air cylinder 11 in. in diameter. Orders for repair parts for special 11-in. compressors having air cylinders other than 11 in. in diameter, or with water-jacket, should omit piece number, but give reference number, name of piece, and either diameter of air cylinder or serial number on name plate.

When this compressor is ordered complete, for industrial, or other than railroad-brake, service order should so state, and specify Piece No. 19,394. When so ordered, packing and cap-nut wrench, Piece No. 2,482 (instead of Piece No. 15,496), air-valve-seat wrench, Piece No. 2,485, air-valve-cage wrench, Piece No. 2,483, and wrench for $\frac{5}{8}$-in. capscrews, Piece No. 1,938, are included with the compressor, without extra charge.

$8\frac{1}{2}$-IN. CROSS-COMPOUND AIR COMPRESSOR

Piston-Valve Type.—The $8\frac{1}{2}$-in. cross-compound air compressor, shown in Fig. 4, is of the Siamese type, having two steam and two air cylinders arranged side by side respectively. The steam cylinders are at the top. The high-pressure steam cylinder is $8\frac{1}{2}$ in. in diameter, the low-pressure $14\frac{1}{2}$ in. in diameter, and the stroke is 12 in. The low-pressure air cylinder is $14\frac{1}{2}$ in. in diameter and the high-pressure air cylinder, 9 in. in diameter. The valve gear is on the top head of the high-pressure steam cylinder and is of a design similar to that of the $9\frac{1}{2}$-in. and 11-in. pumps.

The high-pressure steam piston with its hollow rod contains the reversing-valve rod that operates the reversing valve and

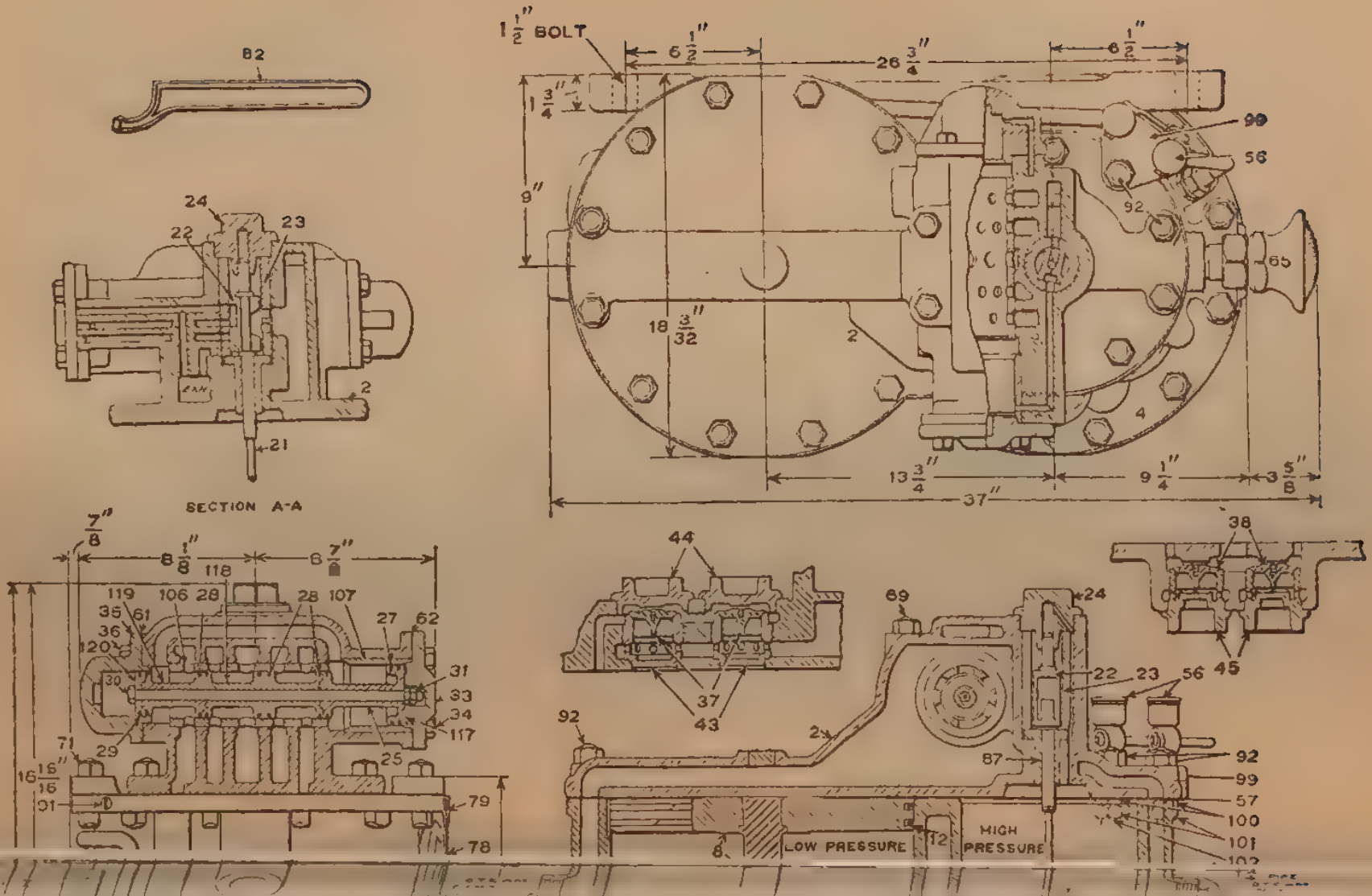
1 1/2" BOLT
6 1/2"
26 3/4"
6 1/2"
1 3/4"
9"
18 3/32"
13 3/4"
9 1/4"
3 5/8"
37"
99
56
92
65
2
4
82
24
22
23
2
21
SECTION A-A
7/8"
8 1/8"
8 7/8"
118
119
106
28
28
107
27
62
35
61
36
120
30
31
33
34
117
71
29
25
16 15/16"
79
78
44
37
43
38
45
69
24
22
23
56
92
2
87
92
99
57
100
101
102
8
12
LOW PRESSURE
HIGH PRESSURE

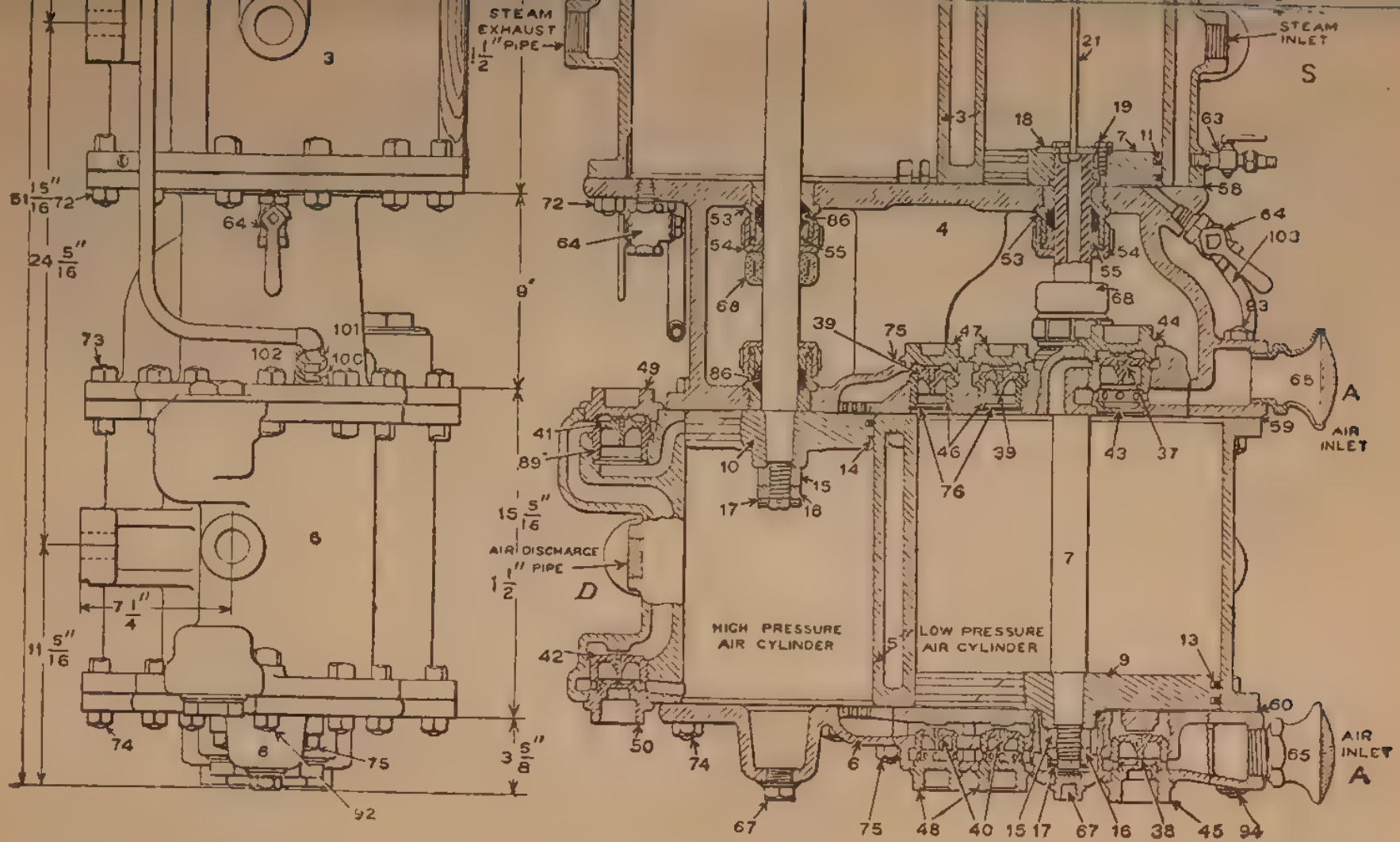
STEAM EXHAUST 1 1/2" PIPE
STEAM INLET
S
AIR DISCHARGE 1 1/2" PIPE
D
HIGH PRESSURE AIR CYLINDER
LOW PRESSURE AIR CYLINDER
AIR INLET
A
AIR INLET
A
51 15/16"
24 5/16"
11 5/16"
7 1/4"
15 5/16"
9"
3 5/8"

FIG. 4

89130

thus, the main valve and its slide valve, which controls steam admission to, and exhaust from, both the high- and low-pressure steam cylinders. The low-pressure steam and high-pressure air pistons are connected by a solid piston rod, having no mechanical connection with the valve gear, being simply floating pistons.

The valve gear and its operation are essentially the same as those of the 9½- and 11-in. pumps. The reversing valve performs the same duties and is operated by the reversing-valve rod in the same manner as that of the 9½- and 11-in. pumps.

The main slide valve is provided with the usual exhaust cavity and four elongated steam ports in its face. The two outer and one of the intermediate ports communicate with two cored passages extending longitudinally in the valve and serve to make the proper connection between the high- and low-pressure cylinders during the expansion of steam from one to the other. The remaining port controls the admission of steam to the high-pressure cylinder. The cavity governs the exhaust from the low-pressure cylinder to the atmosphere.

The valve seat has five ports. Of these the two back ones lead to the bottom and top ends, respectively, of the high-pressure cylinder; the first and third ports to top and bottom ends of the low-pressure cylinder, and the second port to the exhaust.

The steam cylinders are compounded. Steam from the boiler is admitted into the high-pressure cylinder. After doing its work, it is delivered to the low-pressure cylinder where it is expanded again and is then exhausted to the atmosphere. The air cylinders, also, are compounded. Free air is taken out the larger air cylinder and by compression is forced into the smaller cylinder where it is compressed to main-reservoir pressure and forced into the reservoir.

The compressor is designed for 200 lb. steam pressure, working against 140 lb. air pressure. Its normal speed under those conditions is 131 single strokes per min., and its displacement is 150 cu. ft. per min. The weight of the pump is 1,500 lb.; the lift of all air valves is $\frac{3}{32}$ in.

The piece number of the 8½-in. cross-compound air compressor is 39,668; the numbers of the various parts are given in the accompanying list.

Pc. No.	Ref. No.	Name of Part
40,332		Top head, complete, includes one each of 2, 22, 24, 25, 33, 35, 61, 62, four each of 34 and 36.
23,616	2	Top head, bushed, includes 23, 87, 106, 107.
11,312	3	Steam cylinders, complete, includes one each of 63, 77, 78, two of 79, six of 91.
20,503	4	Center piece, complete, includes one of 65, two each of 37, 39, 43, 44, 46, 47, 64, 76, four each of 53, 54, 55.
12,417	5	Air cylinders, complete, includes one each of 41, 42, 49, 50, 89.
20,632	6	Lower head, complete, includes one of 65, two each of 38, 40, 45, 48, 67.
39,664	7	High-pressure steam piston and rod, complete (vanadium steel), includes one each of 15, 16, 17, 18, two of 11, three of 19.
39,665	8	Low-pressure steam piston and rod, complete (vanadium steel), includes one each of 15, 16, 17, two of 12.
39,667	9	Low-pressure air piston, includes two of 13.
39,666	10	High-pressure air piston, includes two of 14.
11,276	11	High-pressure steam-piston ring.
11,278	12	Low-pressure steam-piston ring.
11,278	13	Low-pressure air-piston ring.
11,277	14	High-pressure air-piston ring.
12,136	15	Piston-rod nut.
12,137	16	Piston-rod jam nut.
1,018	17	Piston-rod cotter.
1,688	18	Reversing-valve plate.
12,065	19	Reversing-valve-plate bolt.
20,103	21	Reversing-valve rod.
1,706	22	Reversing valve.
31,328	23	Reversing-valve-chamber bush.
13,302	24	Reversing-valve-chamber cap.
45,583	25	Piston valve, complete, includes one each of 30, 117, 118, 119, 120, two each of 27, 29, six of 28.
34,762	27	Large piston-valve ring.
34,764	28	Exhaust-piston-valve ring.
34,763	29	Small piston-valve ring.
20,591	30	Piston-valve bolt, complete, includes two of 31.
1,625	31	Piston-valve-bolt nut.
20,565	33	Large piston-valve cylinder head.
1,759	34	Large piston-valve cylinder-head cap-screw, $\frac{5}{8}$ in. $\times 1\frac{1}{2}$ in.
39,669	35	Small piston-valve cylinder head, bushed.

Pc. No.	Ref. No.	Name of Part
1,759	36	Small piston-valve cylinder-head cap-screw, $\frac{5}{8}$ in.×$1\frac{1}{2}$ in.
29,177	37	Upper inlet valve.
29,177	38	Lower inlet valve.
24,396	39	Upper intermediate valve.
24,396	40	Lower intermediate valve.
29,177	41	Upper discharge valve.
29,177	42	Lower discharge valve.
20,623	43	Upper inlet-valve seat.
1,697	44	Upper inlet-valve-chamber cap.
1,708	45	Lower inlet-valve cage.
8,430	46	Upper intermediate-valve seat.
1,906	47	Upper intermediate-valve cap.
1,904	48	Lower intermediate-valve cage.
1,697	49	Upper discharge-valve cap.
1,708	50	Lower discharge-valve cage.
1,702	53	Stuffingbox.
51,343	54	Stuffingbox nut.
1,703	55	Stuffingbox gland.
21,414	56	Air-cylinder lubricator.
11,227	57	Upper steam-cylinder gasket.
11,227	58	Lower steam-cylinder gasket.
11,310	59	Upper air-cylinder gasket.
11,310	60	Lower air-cylinder gasket.
20,561	61	Small piston-valve cylinder-head gasket.
20,560	62	Large piston-valve cylinder-head gasket.
1,887	63	$\frac{1}{4}$-in. drain cock.
7,716	64	$\frac{1}{2}$-in. drain cock.
12,124	65	Air strainer.
1,919	67	Lower head plug.
17,582	68	Piston-rod swab.
32,608	69	Top head-bolt and nut, $\frac{3}{4}$ in.×$8\frac{3}{4}$ in.
12,146	71	T-head bolt and nut, $\frac{3}{4}$ in.×$2\frac{3}{8}$ in.
12,146	72	T-head bolt and nut, $\frac{3}{4}$ in.×$2\frac{3}{8}$ in.
12,146	73	T-head bolt and nut, $\frac{3}{4}$ in.×$2\frac{3}{8}$ in.
12,146	74	T-head bolt and nut, $\frac{3}{4}$ in.×$2\frac{3}{8}$ in.
12,150	75	T-head bolt and nut, $\frac{3}{4}$ in.×$3\frac{3}{8}$ in.
17,990	76	Guard plate for upper intermediate valves.
11,315	77	Lagging.
11,313	78	Jacket.
11,314	79	Jacket band.
15,496	82	Packing-nut wrench.
4,862	86	Piston-rod packing (Vulcabeston) set (sufficient for two stuffingboxes).
31,329	87	Reversing-valve-rod bush.
8,269	89	Upper discharge-valve seat.
1,898	91	Jacket-band screw.
12,148	92	T-head bolt and nut, $\frac{3}{4}$ in.×$3\frac{1}{8}$ in.
12,152	93	T-head bolt and nut, $\frac{3}{4}$ in.×5 in.
25,092	94	T-head bolt and nut, $\frac{3}{4}$ in.×$5\frac{1}{4}$ in.

Pc. No.	Ref. No.	Name of Part
*21,497		Lubricator, bracket, and pipe connections, complete, includes one each of 99, 103, 104, two of 56, four each of 100, 101, 102.
21,439	99	Lubricator bracket.
21,595		Oil-pipe union-connection, complete, includes 100, 101, and 102.
20,470	100	Union stud.
2,001	101	Union nut.
1,892	102	Union swivel.
21,597	103	Oil pipe to low-pressure air cylinder.
52,291	104	Oil pipe to high-pressure air cylinder.
25,848	106	Piston-valve bush.
25,847	107	Large piston bush.
36,239		Large piston portion with rings, includes one each of 28 and 117, and two of 27.
20,583	117	Large piston portion, less rings.
36,240		Exhaust-piston portion with rings, includes one of 118 and four of 28.
20,585	118	Exhaust-piston portion, less rings.
45,206		Small piston portion with rings, includes 28, 119, and two of 29.
45,201	119	Small piston portion, less rings.
54,693	120	Small piston valve cylinder cover bush.
20,556	123	$\frac{3}{16}'' \times \frac{7}{8}''$ cotter.

Operation of Compressor.—While steam is being admitted to the bottom end of the high-pressure cylinder, forcing the piston upwards, the piston valve opens the bottom end of the low-pressure cylinder to the exhaust; also the cored passages in the piston valve connect the top end of the high-pressure cylinder to the top end of the low-pressure cylinder, thus allowing the steam above the high-pressure piston to expand into the low-pressure cylinder and force the piston downwards. During this time, free air is taken into the bottom end of the low-pressure air cylinder, while that in the top end is compressed into the high-pressure cylinder to about 40 lb. A similar increase obviously takes place in the pressure above the high-pressure air piston, which exerts a downward force on that piston the same as does the steam above the low-pressure steam piston. On the lower side of the high-pressure air piston, the air under compression to the main reservoir exerts a resistance equal to the area of the piston times the

*When air-cylinder lubricator is to be mounted on the boiler head or inside of the locomotive cab, state so and specify Piece No. 21,984 instead of Piece No. 21,497.

main-reservoir pressure; this is considerably less than the combined pressures exerted by the steam and air pressures on top of their respective pistons. When the pump mechanism is reversed the action is simply a repetition of that just described. It is of little importance whether the high-pressure

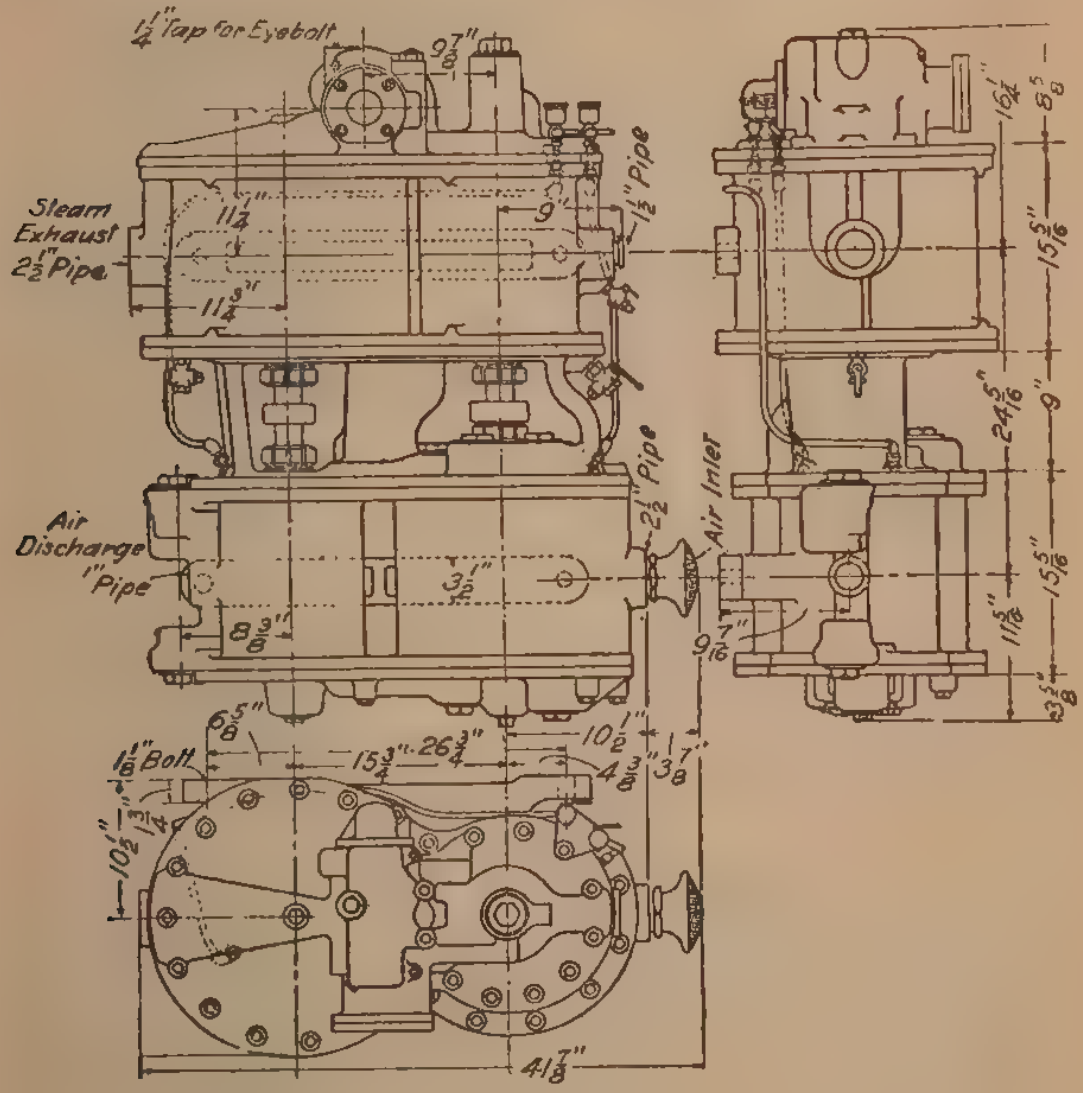

FIG. 5

air piston varies in its stroke or not, since it can neither interfere with the valve-gear travel nor govern the quantity of free air taken into the pump; therefore, its action is immaterial so long as it forces all the air received from the low-pressure cylinder into the main reservoir.

GENERAL DIMENSIONS, CAPACITY, AND WEIGHT OF WESTINGHOUSE STANDARD AIR COMPRESSORS

	Type of Compressor				
	8-In.	9½-In.	11-In.	8½-In. Cross-Compound	10½-In. Cross-Compound
Diameter of steam cylinder, in inches	8	9½	11	8½ and 14½	10½ and 16¾
Diameter of air cylinder, in inches	8	9½	11	9 and 14½	9½ and 14½
Stroke, in inches	10	10	12	12	12
Steam-admission pipe, in inches	1	1	1	1¼	1½
Steam-exhaust pipe, in inches	1¼	1¼	1½	1½	2½
Air-admission pipe, in inches	1½	1½	1½	2	2½
Air-delivery pipe, in inches	1¼	1¼	1¼	1½	1½
Normal speed, single strokes per minute	120	120	100	100	100
Capacity operating at normal speed against 90 lb. pressure, in cubic feet	20	28	45	98	100
Over-all dimensions, in inches	43 5/16 × 18⅜ × 13¾	43¼ × 18¼ × 14 17/32	51¼ × 21¾ × 15 29/32	52 × 37 × 18⅛	51⅞ × 41⅞ × 21
Net weight, in pounds	490	550	868	1,500	1,800
Weight boxed for shipment, in pounds	560	650	960	1,750	2,150
Piece number, complete	11,379	51,477	3 679	39,668	72,174

With 200 lb. steam pressure, full throttle, and working against a main-reservoir pressure of 130 lb., the piston cycles will be about 65 per min.; when working against 70 lb. main-reservoir pressure the piston cycles will be about 81 per min. With 200 lb. steam pressure and pumping main-reservoir pressure from 30 to 70 lb., the piston makes about 82½ cycles per min. Thus, the possibility of racing is eliminated.

10½-IN., CROSS-COMPOUND, AIR COMPRESSORS

The 10½-in., cross-compound, air compressor, shown in Fig. 5, was designed for industrial service and not for train air-brake service. It was designed for 100 lb. steam pressure working against 80 lb. air pressure. Under these conditions, its normal speed is 131 single strokes per min. and its displacement is 150 cu. ft. per min. It will operate satisfactorily on steam pressures ranging from 80 to 160 lb., the air pressures ranging from 40 to over 150 lb. depending on the steam pressure. The rated boiler power for operating the compressor is 25 H. P. The construction of the 10½-in. compressor is similar to that of the 8½-in., and the operation of the two is the same. The lift of the air valves is: Intermediate, ⅛-in.; suction, $\frac{5}{32}$-in.; discharge, $\frac{5}{32}$-in.

MAINTENANCE OF SIMPLE AIR COMPRESSORS

CAUSES OF PUMP FAILURES

Speed of Compressor.—The heating of the air cylinder is a feature of air compression that cannot be prevented. As an example of the normal heating resulting from extreme duty, a 9½-in. compressor in good order that for 1 hr. maintained an average speed of 174 single strokes or exhausts per min., working constantly against 100 lb. of air pressure, was discharging the air at a temperature of 408° F. Higher speed or greater air pressure would have increased the heating, while slower speed, shorter time of test, or lower air pressure would have decreased it.

Speaking generally, the speed should not exceed 140 exhausts per min. and such a speed should not be continuously

maintained for any considerable time, as even this speed will cause excessive heating. This is shown by another test where an average speed of about 60 exhausts per min., after the main-reservoir pressure was pumped up, and a maximum of 77 strokes per min. at the completion of 1 hr. and 50 min. of the test, gave a discharge temperature of 316°. The foregoing show plainly the great need of good maintenance, of not wasting air either by leakage or poor handling, and of giving the compressor as much time to do its work as is practicable.

With two compressors per engine, the separate throttles should be kept wide open and the speed regulated by the main compressor throttle, in order to divide the work equally between the two compressors.

Compressor Faults.—It is evident that a compressor cannot compress more air than it draws in and not that much if there is any leakage to the atmosphere about the air cylinder. Bearing this in mind, practice frequently listening at the air inlet when the compressor is working slowly while being controlled by the governor, and wherever a poor suction is noted on either or both strokes locate and report the fault. One of the most serious leaks is through the air-cylinder stuffingbox, as it not only greatly decreases the air delivered, and, by the faster speed required, increases the heating, but it also causes pounding through loss of cushion. When tightening the packing, do not bind the rod, as to do so will damage both the packing and the rod. Be careful not to cross the gland nut threads.

If necessary to replace a broken air valve on the road or elsewhere, not permitting of proper fitting, at the earliest opportunity have the repairman replace the temporary valve with another so as to insure the correct angle and width of valve and seat contact, the needed ground joint and the requisite lift for all valves.

Never remove or replace the upper steam-cylinder head with the reversing-valve rod in place as to do so will almost invariably result in bending the rod and causing a pump failure.

Any unusual click or pound should be reported as it may indicate either a loose piston or a reversing-valve plate capscrew or other serious fault.

Any steam leakage that can reach the air inlet of the compressor should be promptly repaired as such increases the danger of water entering the brake pipe.

Keeping the suction strainer clean is of the utmost importance as even a slightly clogged strainer will greatly reduce the capacity where the speed is at all fast. A seriously or completely obstructed strainer, as by accumulated frost, aggravated by rising steam, will increase the compressor speed and will also be indicated by inability to raise or maintain the desired pressure.

It is an aid to good operation to clean the air cylinder and its passages thoroughly at least three or four times a year, by circulating through them a hot solution of lye or potash. This should always be followed by sufficient clean, hot water to thoroughly rinse out the cylinder and passages, after which a liberal supply of valve oil should be given the cylinder. Suitable tanks and connections for performing this operation can easily be arranged in portable form. Never put kerosene oil in the air cylinder to clean it.

LUBRICATING SIMPLE COMPRESSORS

Steam Cylinder.—A sufficient quantity of good valve oil should be used in the steam cylinder to keep the parts well lubricated and prevent groaning. The quantity of oil necessary will depend on the kind of oil used, and also on the pump itself, as some pumps require more than others. If the pump groans constantly, and the pump exhaust or the drain cocks show that considerable water is being worked through the steam cylinder, its dry pipe should be examined for leaks that might allow water to reach the pump and wash out the oil.

Air Cylinder.—The quantity of oil to be used in the air cylinder depends to a great extent on the pump, but in any case it should be used very sparingly. The amount should only be sufficient to keep the packing rings free and prevent the cylinder walls from cutting. If too much is used, a gummy deposit is formed in the air cylinder and air passages, and on the air valves, which tends to cause heating; also, oil works back into the brake valve and triples and causes them to

work poorly. Good valve oil is considered best for use in the air cylinder. The oil may be fed to the cylinder by means of a swab on the piston rod, or through the air-cylinder oil cups, but it should never be fed through the air inlets, as it will close the air passages, gum up the valves, reduce their lift, and sooner or later result in overheating. Animal or vegetable oils should not be used in the air cylinder, as they gum very readily; also, mineral oils that have a low flashing point, as, for instance, kerosense, should not be used in a hot cylinder, as they generate an explosive gas that ignites at a comparatively low temperature, and may, therefore, cause trouble.

LUBRICATING CROSS-COMPOUND COMPRESSORS

Steam Cylinders.—The steam-cylinder lubricator should not be started until all condensation has escaped from the compressor and the drain cocks closed. After closing the drain cocks start the lubricator to feed in 10 or 15 drops of oil as rapidly as possible, then regulate the feed to about 1 or 2 drops per min. for each steam cylinder. No definite amount can be specified, as the amount of lubrication required depends on the work the compressor has to do, the quality of the steam, condition of compressor, and so on. Keep the lubricator feeding while the compressor is running.

Air Cylinders.—On account of the high temperatures developed by air compression, the variation between maximum and minimum delivered air pressures, and the necessity of preventing oil from passing into the system, one of the vital problems in efficient compressor operation is to provide a simple means for supplying lubrication to the air cylinders in proper quantity and at regular intervals.

To overcome the difficulties attending the lubrication of the air cylinders of the 8½-in. and 10½-in. cross-compound compressors, two non-automatic oil cups are mounted on a bracket, which, in turn, is connected to the air cylinders by the necessary piping, thereby establishing an independent passage from each cup to the high- and low-pressure air cylinders respectively. This cup, shown in the accompanying illustration, is threaded for a ⅜-in. tapped opening, while the upper end is

provided with a tight-fitting screw cap. A screen prevents any dirt in the oil being carried into the cylinder. When the handle is turned, a cavity in the key, which normally forms the bottom of the oil cup, deposits a definite amount of oil in the air cylinders, at the same time preventing back pressure from reaching the oil chamber. The bracket may be attached to the top head of the compressor, or placed in the locomotive cab, to suit the convenience or standard practice of any railroad.

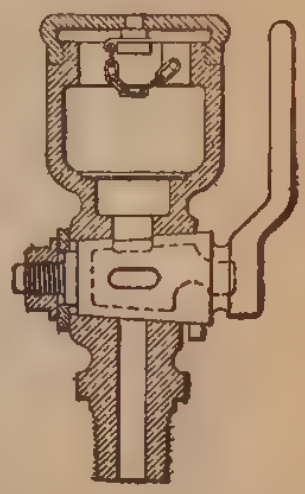

To oil the low-pressure air cylinder, open its oil cup and blow out all dirt, close and fill it with valve oil, and on the down stroke of the piston open the cup to allow the oil to be drawn into the cylinder, closing the cup before the beginning of the up stroke. This is most easily done when the speed is moderate and the air pressure low. To oil the high-pressure air cylinder, open its oil cup and blow out all dirt, then close and fill with valve oil and screw on the cover. Now open the cup and leave it open for a short time so as to permit the oil to find its way into the cylinder, after which it should be left closed. Valve oil only should be used in the air cylinder, a lighter oil will not last and is dangerous; a heavier oil soon slogs and restricts the air passages, causing the compressor to heat and compress air slowly. A swab, well oiled, is essential on each piston rod.

OUTPUT OF AIR COMPRESSORS

In the accompanying tables are given the cubic feet of free air compressed and delivered per minute for different diameters of air cylinders. These tables also give the delivery air pressures for different steam pressures when the 8-in. and 9½-in. compressors operate at the rate of 120 single strokes per min. and the 11-in. compressor at the rate of 100 single strokes per min.

OUTPUT OF 8-IN. AIR COMPRESSOR

(New Standard)

Diam. of Air Cyl. In.	Cu. Ft. of Free Air Compressed per Min. to Following Air Pressures			Steam Pressure, in Pounds																		
				200	190	180	170	160	150	140	130	120	110	100	90	80	70	60	55	50	45	40
	50 Lb.	100 Lb.	150 Lb.	Pressure of Compressed Air, in Pounds																		
8	22	20	17	180	170	160	150	140	130	120	110	100	90	80	70	60	50	40	35	30	25	20
7½	19	17½	15	205	195	185	175	160	150	140	130	115	105	95	80	70	60	50	40	35	30	25
7	16½	15	13½				200	190	175	160	150	135	125	110	100	85	70	60	50	45	40	30
6½	14	13	11						205	190	175	160	145	130	115	100	85	70	65	55	50	40
6	12	11	9½								210	195	175	155	140	120	105	85	80	70	60	50
5½	10½	9½	8										210	190	170	150	130	105	95	85	75	65
5	8¾	8	6¾												210	185	160	135	120	110	95	80
4½	7	6½	5¼														200	170	155	140	120	105

OUTPUT OF 9½-IN. AIR COMPRESSOR

Diam. of Air Cyl. In.	Cu. Ft. of Free Air Compressed per Min. to Following Air Pressures			Steam Pressure, in Pounds																			
				220	210	200	190	180	170	160	150	140	130	120	110	100	90	80	70	60	50	40
	50 Lb.	100 Lb.	150 Lb.	Pressure of Compressed Air, in Pounds																		
13	72	65	55	101	96	90	86	80	75	70	64	59	53	48	43	37	32	27	21	16	11	5
11	40	37	31	148	141	133	126	118	111	103	96	88	81	73	66	58	51	44	36	29	21	14
10	34	31	27	180	170	165	155	145	135	125	120	110	100	90	80	75	65	55	47	38	29	20
9½	31	28	24	205	195	185	175	165	150	145	135	125	115	105	95	85	75	65	55	45	35	25
9	27	25	21			205	195	185	170	160	150	140	130	115	105	95	85	70	60	50	40	30
8½	25	22½	19					210	195	185	170	160	145	135	120	110	95	85	70	60	45	35
8	22	20	17							210	195	180	165	150	140	125	110	95	80	70	55	40
7½	19	17½	15									210	190	175	160	145	125	110	95	80	65	45
7	16½	15	13½											205	185	170	150	130	110	95	75	55
6½	14	13	11													200	175	155	135	110	90	70
6	12	11	9½														210	185	160	135	110	85
5½	10½	9½	8																190	160	130	100
5	8¾	8	6¾																	200	165	125

OUTPUT OF 11-IN. AIR COMPRESSOR

Diam. of Air Cyl. In.	Cu. Ft. of Free Air Compressed per Min. to Following Air Pressures			Steam Pressure, in Pounds																		
				225	210	200	190	180	170	160	150	140	130	120	110	100	90	80	70	60	50	40
	50 Lb.	100 Lb.	150 Lb.	Pressure of Compressed Air, in Pounds																		
15	108	100	93	95	90	80	75	70	65	60	55	49	44	38	33	28	23	17	11	6		
13	71	65	60	135	125	115	110	100	95	90	80	75	65	60	50	45	38	31	24	17	10	4
12	59	55	51	163	150	142	134	125	117	108	100	92	83	75	66	58	49	41	33	24	16	7
11	48	45	42	200	185	175	165	155	145	135	125	115	105	95	85	75	65	55	45	35	25	15
10½	44	41	38		200	190	180	170	160	150	135	125	115	105	95	85	70	60	50	40	30	20
10	40	37	34				205	190	180	165	155	145	130	120	105	95	85	70	60	45	35	20
9½	36	33½	31						200	190	175	160	150	130	125	110	95	80	70	55	40	30
9	32	30	28							210	195	180	170	150	135	125	110	95	80	65	50	35
8½	29	27	25									210	190	175	160	140	125	110	90	75	60	40
8	26	24	22											200	180	165	145	125	105	85	70	50
7½	22½	21	19½												210	190	170	145	125	105	80	60
7	19½	18	16½														195	170	145	125	100	70
6½	17	16	15															205	175	145	115	90

The accompanying table shows that the capacity of the 8½-in., cross-compound compressor is over 3⅓ times that of the 9½-in. and 2¼ times that of the 11-in. compressor.

COMPARISON OF 9½-IN., 11-IN., AND 8½-IN., CROSS-COMPOUND, AIR COMPRESSORS

Type of Pump	Steam Pressure Pounds	Constant Main-Reservoir Pressure Pounds	Free Air per Minute Cubic Feet	Steam Consumption per 100 Cu. Ft. Free Air
9½-in.	200	130	39	60.00
11-in.	200	130	58	58.00
8½-in. cross-compound	200	130	131.04	19.65

COMPARATIVE TESTS OF 11-IN. AND 9½-IN. AIR COMPRESSORS

TEST NO. 1, TIME REQUIRED TO PUMP FROM 0 TO 90 LB. PRESSURE WITH 1-IN. STEAM AND 1¼-IN. EXHAUST PIPE

Name of Compressor	Boiler Pressure Pounds		Time Required to Compress Air From 0 to 90 Lb. per Square Inch		Number of Strokes of Pump	Piston Speed Feet		Capacity of Reservoirs and Pipes Cubic Inches
	Start	Finish	Min.	Sec.		Total	Per Min.	
11-in.	195	189	1	55	168	336.0	175.3	27,850
9½-in.	198	190	2	36	263	438.3	168.5	38,200
11-in.	199	197	1	55	171	342.0	178.2	38,130
9½-in.	195	190	2	36	244	406.6	156.4	38,200

TABLE—*(Continued)*

Amount of Compression	11-In. Compressor				9½-In. Compressor	
	Time Required				Time Required	
	Min.	Sec.	Min.	Sec.	Min.	Sec.
0 to 20 lb.		24		24.5		30
0 to 40 lb.		48		49.0	1	
0 to 45 lb.					1	10
0 to 50 lb.	1	2	1	2.0		
0 to 60 lb.	1	15	1	15.0		
0 to 70 lb.	1	28	1	27.0		
0 to 90 lb.	1	55	1	55.0	2	36

TEST NO. 2, TIME REQUIRED TO PUMP FROM 0 TO 90 LB. PRESSURE WITH 1-IN. STEAM AND 1¼-IN. EXHAUST PIPE

Name of Compressor	Boiler Pressure Pounds		Time Required to Compress Air From 0 to 90 Lb. per Square Inch		Number of Strokes of Pump	Piston Speed Feet		Capacity of Reservoirs and Pipes Cubic Inches
	Start	Finish	Min.	Sec.		Total	Per Min.	
11-in....	195	185	1	48.5	189	378	208.8	38,100
11-in....	195	180	1	48.5	190	380	210	38,100

Amount of Compression With an 11-In. Compressor From	Time Required			
	Min.	Sec.	Min.	Sec.
0 to 20 lb.....		23.0		23.0
0 to 40 lb.....		46.5		46.0
0 to 50 lb.....		58.5		59.0
0 to 60 lb.....	1	11.0	1	11.0
0 to 70 lb.....	1	23.0	1	23.0
0 to 90 lb.....	1	48.5	1	48.5

TEST NO. 3, COMPARISON OF STEAM CONSUMPTION

Name of Compressor	Size of Opening Inch	Main-Reservoir Pressure At Start Pounds per Square Inch	Main-Reservoir Pressure At Finish Pounds per Square Inch	Loss in Main-Reservoir Pressure	Boiler Pressure Pounds		Total Time of Test Minutes Min.	Total Time of Temperature and Condensation Test Sec.
					Start	Finish		
11-in.	$\frac{13}{64}$	90	90	None	194	195	1	30
9½-in.								
11-in, with 1¼-in. steam and 1½ in. exhaust pipe	$\frac{11}{64}$	90	90	None	195	180	1	30
9½-in.	$\frac{11}{64}$	90	90	None	195	190	1	30

Name of Compressor	Temperature of Water Degrees F.		Increase in Temperature of Water Degrees	Weight of Water Pounds		Increase in Weight of Water Pounds	Number of Strokes of Pump in 30 Sec.	Total Piston Speed Feet	Piston Speed per Minute Feet
	Start	Finish		Start	Finish				
11-in.	60	168	108	240	262.5	22.5	43	86.0	86.0
9½-in.									
11-in., with 1¼-in. steam and 1½ in. exhaust pipe	53	99	46	240	249.0	9.0	27	54.0	108.0
9½ in.	56	145	89	242	257.0	15.0	44	73.3	146.6

TEST NO. 4. RISE IN TEMP. OF DISCHARGE AGAINST 100 LB. PRES. DURING 1 HR. RUN AT MAX. CAP.

Name of Compressor	Size of Opening Inch	Total Time of Test Hour	Constant Main Reservoir Pressure per Square Inch	Loss in Main Reservoir Pressure	Boiler Pressure Pounds		Number of Strokes of Pump for 30 Sec. End of			Average Number of Strokes of Pump per Minute	Piston Speed Feet per Minute	Piston Speed Feet for 1 Hr.
					Start	Finish	15 Min.	30 Min.	55 Min.			
11 in.	12/64	1	100	None	195	195	41	40	40	80.6	161.2	9,672
11 in., with 1¼-in. steam and 1½-in. exhaust pipes	12/64	1	100	None	195	195	40	40	40	80.0	160.0	9,600

Name of Compressor	At 100 Lb. per Sq. In. Main Res.	Temperature of Air Delivered By Pump. Taken Every 5 Min. During Test, Degrees F.												Water in Main Res. at End of Test Oz.
		5	10	15	20	25	30	35	40	45	50	55	60	
11-in.	270	371.0	415.0	447.5	467.5	482.5	494.0	504	510	512.5	517.5	521	523.0	10.5
11-in. width 1¼-in. steam and 1½-in. exhaust pipes	285	382.5	427.5	458.0	479.0	494.0	507.5	515	522	529.0	532.5	539	542.5	3.5

TIME TO PUMP FROM 0 TO 90 LB. PRESSURE, AVERAGES AND PER CENT. OF DIFFERENCE TAKEN FROM TEST NO. 1

	11-In. Pump		9½-In. Pump		11-In. Pump	9½-In. Pump	Per Cent. in Favor of 11-In.
	Min.	Sec.	Min.	Sec.			
Average boiler pressure, in pounds					192	194	
Time required to pump air from 0 to 20 lb.		24		30			20.00
Time required to pump air from 0 to 40 lb.		48	1				20.00
Time required to pump air from 0 to 90 lb.	1	55	2	36			26.00
Capacity of main reservoir, in cubic inches					37,850.0000	38,200.0000	
Capacity of main reservoir, in cubic feet					21.9000	22.1000	
Time required to pump 1 cu. ft. of air from 0 to 90 lb., in seconds					5.2500	7.0600	25.60
Piston speed, in feet, for each 1 cu. ft. of air compressed					15.3400	19.8300	22.64
Cubic feet of air compressed for each 1 ft. of piston speed					.0651	.0504	29.17

TIME TO PUMP FROM 0 TO 90 LB. PRESSURE, AVERAGES AND PER CENT. OF DIFFERENCE, TAKEN FROM TEST NO. 2

	11½ In. Pump		9½-In. Pump		11-In. Pump	9½-In. Pump	Per Cent. in Favor of 11-In.
	Min.	Sec.	Min.	Sec.			
Average boiler pressure, in pounds					190	192.5000	
Time required to pump air from 0 to 20 lb.		23.0		30			23.30
Time required to pump air from 0 to 40 lb.		46.0	1	00			23.30
Time required to pump air from 0 to 90 lb.	1	48.5	2	36			30.38
Capacity of main reservoir, in cubic inches					38,100.0000	38,200.0000	
Capacity of main reservoir, in cubic feet					22.0400	22.1000	
Time required to pump 1 cu. ft. of air from 0 to 90 lb., in seconds					4.9200	7.0600	30.31
Piston speed, in feet, for each 1 cu. ft. of air compressed					17.1500	18.3900	6.74
Cubic feet of air compressed for each 1 ft. of piston speed					.0583	.0518	12.54

Approximate data on the 10½-in., cross-compound, air compressor showing capacity, steam consumption, volumetric efficiency, displacement, steam pressures for operating at constant speed with various air pressures, and steam pressures

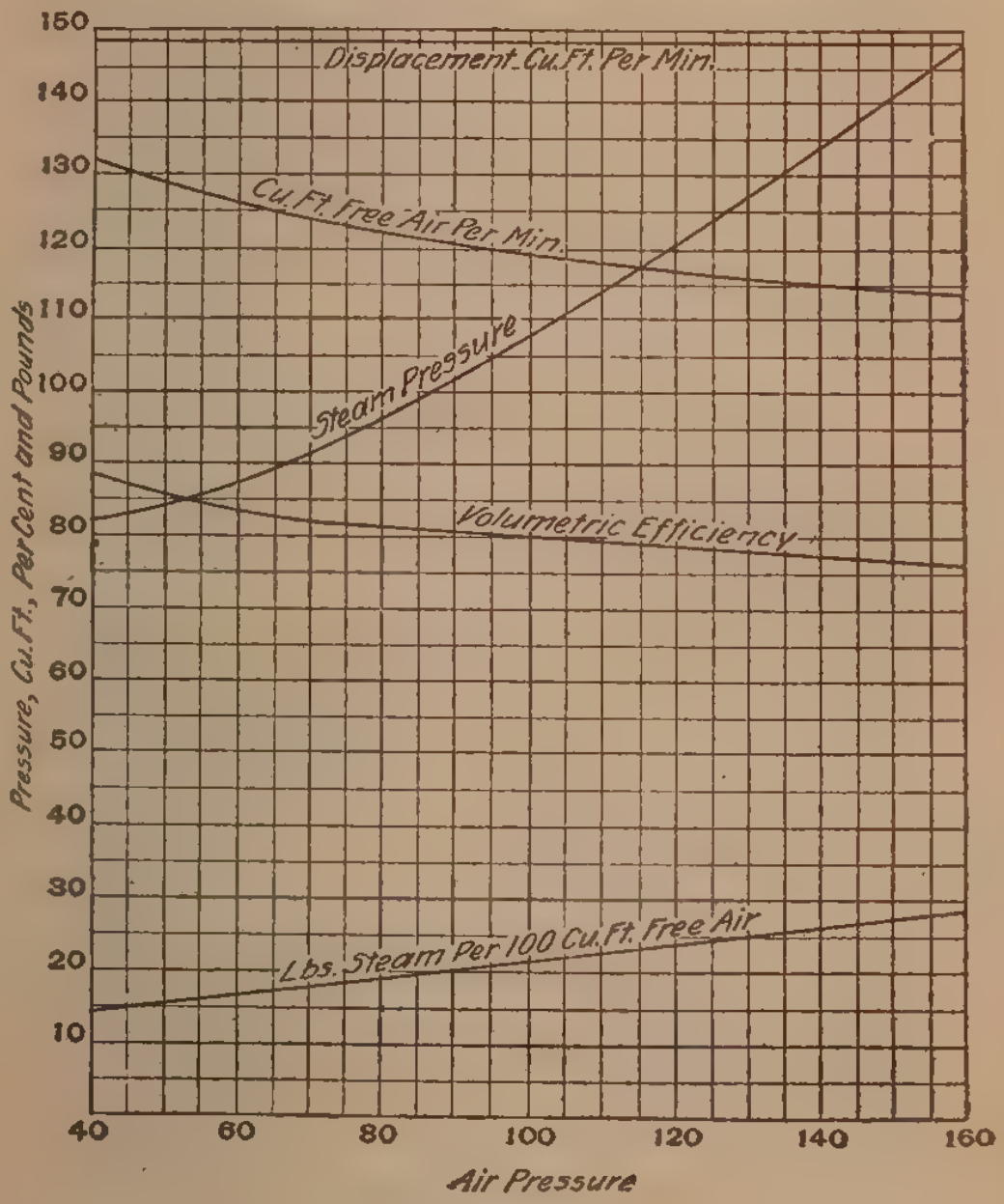

FIG. 1

for operating against constant air pressure at various speeds are shown in the charts given in Figs. 1 and 2. The first chart shows that at a constant speed of 130 single strokes per min. and 80 lb. air pressure, the steam pressure required

is 96 lb. The actual amount of free air delivered is 122 cu. ft. per min. The volumetric efficiency is 81½%. The steam

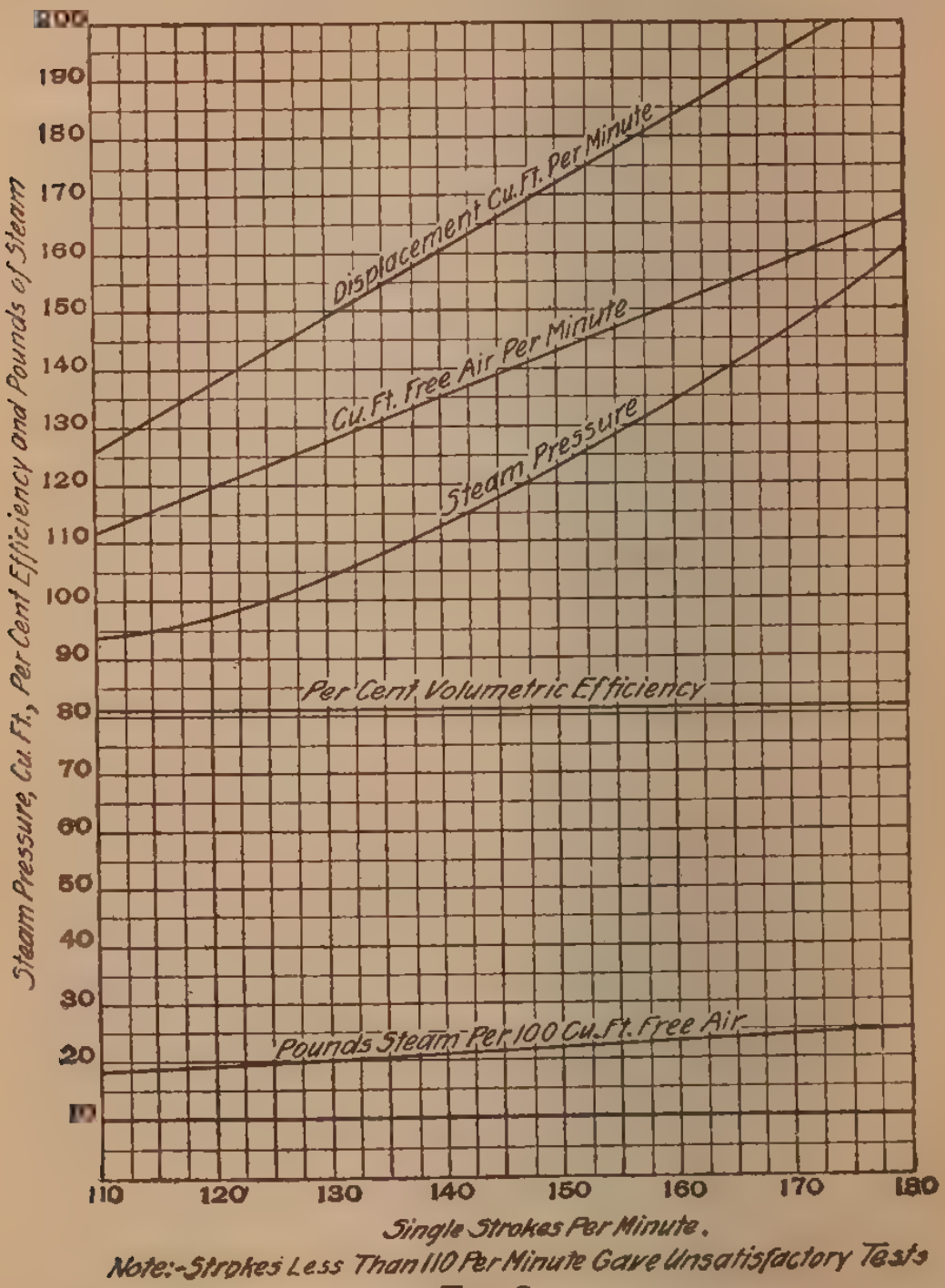

FIG. 2

consumption is 18½ lb. per 100 cu. ft. of free air and the displacement is approximately 149 cu. ft. per min.

The second chart shows that at 90 lb. constant air pressure and 120 single strokes per min. the steam pressure required is 98 lb. The actual amount of free air delivered is 108 cu. ft. per min. The efficiency is 80%. Steam consumption is 19 lb. per 100 cu. ft. of free air and the displacement is 138 cu. ft. per min.

COMPARATIVE STEAM AND COAL CURVES

Fig. 3 shows rates of air delivery of the 11 in.×11 in.×12 in. and the 8½-in. cross-compound compressors at 185 lb. steam pressure and 110 lb. air pressure; compressor speed controlled by 1¼-in. governor set at 110 lb.; coal required com-

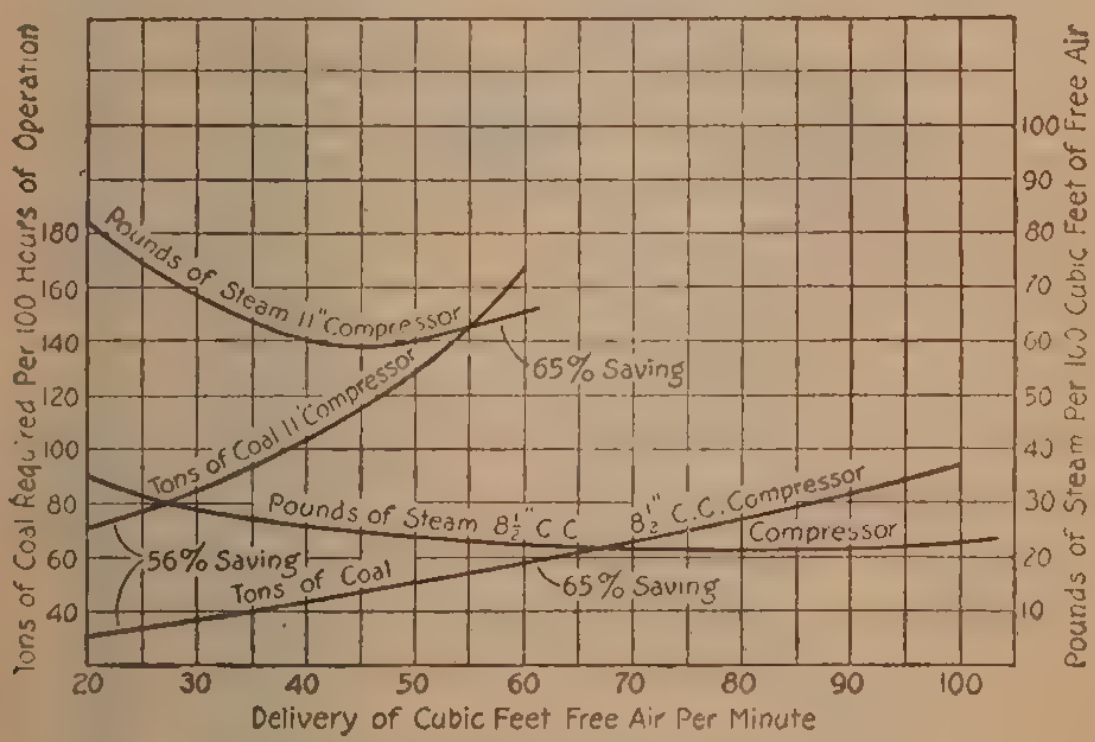

FIG. 3

puted on the basis of 7 pounds of water evaporated per pound of coal, and on 1,000 hours continuous service.

Example: At 50 cu. ft. free air per minute 11-in. compressor uses 129 tons of coal and 8½-in. cross-compound compressor uses 52 T. of coal. $129-52=77$ T. saving. $\frac{77}{129}$ $=.60$ or 60% savings.

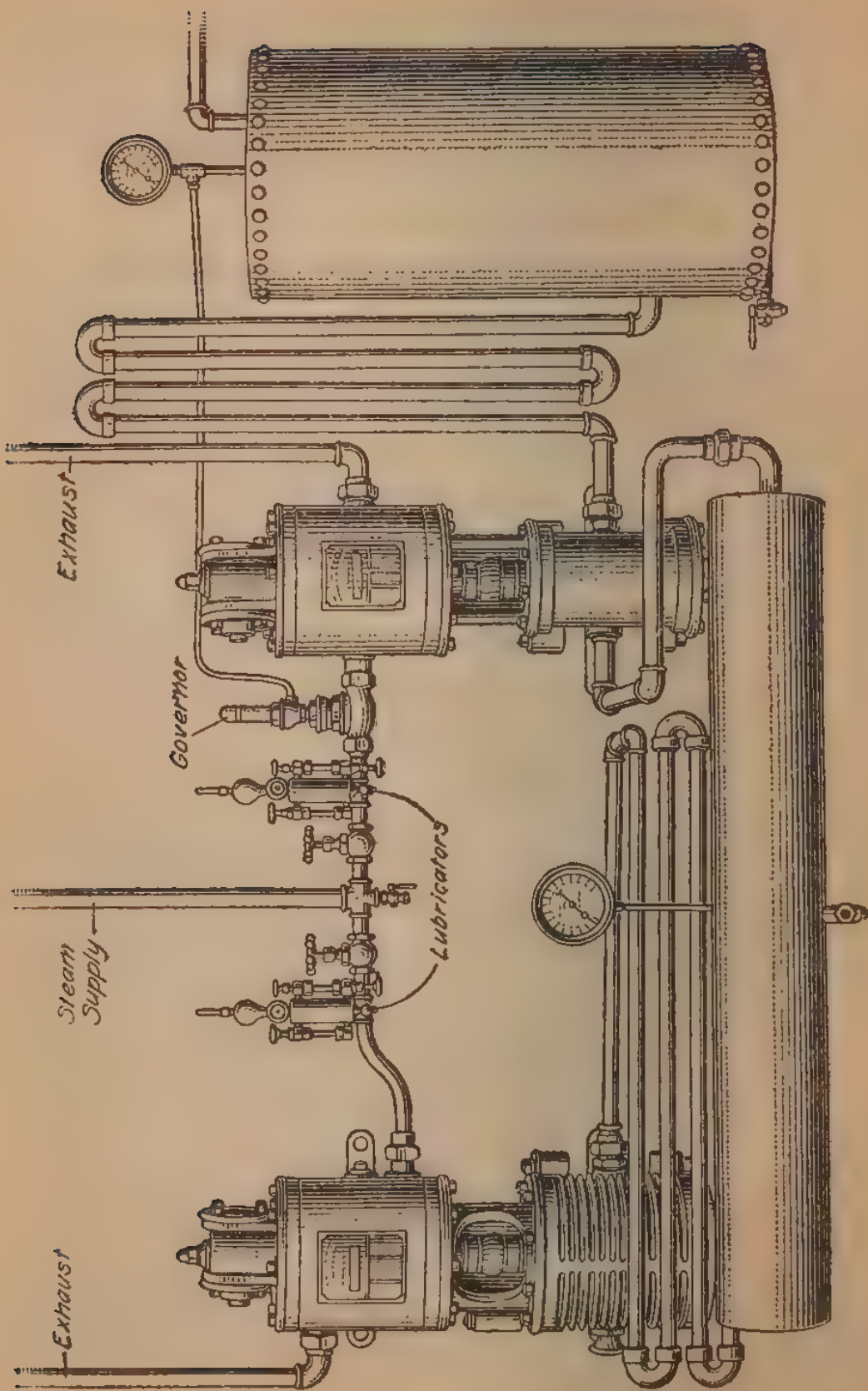
Exhaust
Governor
Lubricators
Steam Supply
Exhaust

OPERATING COMPRESSORS TOGETHER

COMPRESSORS IN SERIES

In industrial service, when it is desired to deliver air pressures between 150 and 300 lb., two compressors are often operated in series; that is, the air-delivery pipe from the first air compressor is connected indirectly to the air-intake connection of the second compressor, as shown in the illustration on page 68. The compressor on the left-hand, or the low-pressure compressor, discharges through a radiating coil into a long, narrow, intermediate reservoir, which has the greatest possible cooling surface. The right-hand, or high-pressure, compressor receives its air supply from this reservoir and discharges through a second radiating coil into the air-storage reservoir. The governor is connected to the steam-admission pipe to the high-pressure compressor and is actuated by the pressure in the air-storage reservoir. When the pressure in the reservoir reaches normal, the governor stops the high-pressure compressor, and the low-pressure compressor is in turn stopped by the intermediate-reservoir pressure when that pressure becomes high enough to stop the compressor. Each radiating coil should contain at least 25 ft. of cooling pipe. The steam throttle valves of each compressor should be regulated so as to cause the relative speeds to give the required intermediate-reservoir pressure; otherwise the final delivery pressure will not correspond to that in the accompanying table.

All sizes of 8-in. compressors given in the accompanying table refer to the new pattern compressor.

COMPRESSORS IN SERIES-COMPOUND

When the question of economy in steam consumption is important, two compressors of different sizes may be connected in series, not to obtain a high-delivery air pressure, but to increase the quantity of air compressed at the ordinary pressure per unit of steam used. The low-pressure pump has an air cylinder of large diameter and the pumps are connected as before. The size of the air cylinders, the speeds of both

AIR COMPRESSORS IN SERIES

Approximate Delivery Air Pressure Pounds	Steam Pressure Pounds	Low-Pressure Compressor		Approximate Speed of Low-Pressure Compressor Single Strokes	Approximate Intermediate-Reservoir Pressure Pounds	High-Pressure Compressor		Approximate Speed of High-Pressure Compressor Single Strokes	Approximate Free Air Delivered per Minute Cubic Feet
		Steam Cylinder Inches	Air Cylinder Inches			Steam Cylinder Inches	Air Cylinder Inches		
280	80	11	7½	100	146	8	6	18	19½
280	80	9½	7	120	131	11	8	6	14
280	80	8	5½	120	149	8	6	10	8
280	90	11	8	100	144	9½	7½	15	22
280	90	9½	7	120	150	8	6½	12	13½
280	90	8	6	120	140	9½	7½	7	9½
280	100	11	8½	100	141	9½	8	15	25
280	100	9½	7½	120	144	8	6½	15	15
280	100	8	6½	120	132	8	6½	12	11½
280	110	11	9	100	138	8	7	22	28½
280	110	9½	8	120	139	8	7	15	18
280	110	8	6½	120	147	9½	8½	7	11
280	120	11	9½	100	135	9½	8½	18	31½
280	120	9½	8½	120	134	9½	8½	12	20
280	120	8	7	120	137	8	7	12	14
280	130	11	10	100	131	11	10	14	35
280	130	9½	8½	120	147	8	7½	14	19
280	130	8	7	120	150	8	8	9	13½
280	140	11	10	100	144	8	8	21	34
280	140	9½	9	120	140	9½	9½	10	21½
280	140	8	7½	120	139	9½	9½	7	15½

280	150	11	10½	100	139	8	8	23	38½
280	150	9½	9½	120	134	8	8	17	25
280	150	8	8	120	130	9½	9½	9	18
280	160	11	11	100	134	11	11	12	42
280	160	9½	9½	120	144	9½	10	10	24
280	160	8	8	120	140	9½	10	8	17
280	170	11	11	100	144	11	12	8	42
280	170	9½	9½	120	154	9½	11	8	24
280	180	11	11	100	154	9½	11	13	42
280	190	11	12	100	134	11	12	10	52
280	200	11	12	100	142	11	13	9	51
290	60	11	6½	100	146	8	5	22	15
290	60	9½	6	120	134	8	5	17	10
290	70	11	7	100	147	8	5½	21	16½
290	70	9½	6½	120	133	9½	6½	12	11½
290	80	11	7½	100	146	9½	7	15	19½
290	80	9½	6½	120	154	9½	7	9	11
290	80	8	5½	120	149	9½	7	7	8
290	90	11	8	100	144	11	8½	8	22
290	90	9½	7	120	150	9½	7½	10	13½
290	90	8	6	120	140	8	6	11	9½
290	100	11	8½	100	141	8	6½	21	25
290	100	9½	7½	120	144	8	6½	15	15
290	100	8	6½	120	132	8	6	14	11½
290	110	11	9	100	138	8	6½	27	28½
290	110	9½	8	120	139	9½	8	12	17½
290	110	8	6½	120	147	8	7	8	11
290	120	11	9	100	153	11	10	7	28
290	120	9½	8	120	153	9½	8½	10	17
290	120	8	7	120	137	8	7	12	14
290	130	11	9½	100	148	8	7½	19	31

AIR COMPRESSORS IN SERIES—(*Continued*)

Approximate Delivery Air Pressure Pounds	Steam Pressure Pounds	Low-Pressure Compressor		Approximate Speed of Low-Pressure Compressor Single Strokes	Approximate Intermediate Reservoir Pressure Pounds	High-Pressure Compressor		Approximate Speed of High-Pressure Compressor Single Strokes	Approximate Free Air Delivered per Minute Cubic Feet
		Steam Cylinder Inches	Air Cylinder Inches			Steam Cylinder Inches	Air Cylinder Inches		
290	130	9½	8½	120	147	9½	9	10	19
290	130	8	7	120	150	8	7½	10	13½
290	140	11	10	100	144	11	10½	8	34
290	140	9½	9	120	140	9½	9	12	21
290	140	8	7½	120	139	8	7½	12	15½
290	150	11	10½	100	139	11	10½	10	38
290	150	9½	9	120	151	8	8	13	21
290	150	8	7½	120	151	8	8	10	15
290	160	11	10½	100	150	9½	10	14	38
290	160	9½	9½	120	144	8	8	16	24
290	160	8	8	120	140	8	8	12	17
290	170	11	11	100	144	9½	10	16	42
290	170	9½	9½	120	154	11	12	5	24
290	170	8	8	120	150	9½	10	7	17
290	180	11	11	100	154	9½	11	13	42
290	180	9½	10	120	137	9½	10	12	27
290	190	11	12	100	134	11	12	11	52
290	190	9½	10	120	147	9½	11	9	27
290	200	11	12	100	142	11	12	10	51
300	60	11	6½	100	146	8	5	22	15
300	70	11	7	100	147	9	6½	16	16½

300	80	11	7½	100	146	8	5½	24	19½
300	80	9½	6½	120	154	11	8	5	11
300	90	11	8	100	144	8	6	24	22
300	90	9½	7	120	150	8	6	14	13½
300	100	11	8½	100	141	9½	7½	17	25
300	100	9½	7½	120	144	9½	7½	11	15
300	100	8	6	120	158	8	6½	9	9½
300	110	11	9	100	138	8	6½	27	28½
300	110	9½	8	120	139	8	6½	18	17½
300	110	8	6½	120	147	8	6½	11	11
300	120	11	9	100	153	8	7	20	28
300	120	9½	8	120	153	8	7	11	17
300	130	11	9½	100	148	9½	8½	16	31
300	130	9½	8½	120	146	9½	8½	11	19
300	130	8	7	120	150	8	7½	10	13½
300	140	11	10	100	143	8	7½	24	34
300	140	9½	9	120	140	8	7½	17	21
300	140	8	7½	120	139	8	7½	12	15½
300	150	11	10	100	155	9½	9½	14	34
300	150	9½	9	120	151	8	8	13	21
300	150	8	7½	120	151	8	8	10	15
300	160	11	10½	100	150	8	8	22	38
300	160	9½	9½	120	144	8	8	16	24
300	160	8	8	120	140	8	8	11	17
300	170	11	11	100	144	9½	9½	18	42
300	170	9½	9½	120	154	9½	10	10	24
300	170	8	8	120	150	9½	10	7	17
300	180	11	11	100	154	11	12	9	42
300	180	9½	10	120	146	9½	10	11	27
300	190	9½	10	120	147	11	12	6	27
300	200	11	12	100	142	11	12	10	51

AIR COMPRESSORS IN SERIES-COMPOUND

Approximate Delivery Air Pressure Pounds	Steam Pressure Pounds	Low-Pressure Compressor		Approximate Speed of Low-Pressure Compressor Single Strokes	Approximate Intermediate-Reservoir Pressure Pounds	High-Pressure Compressor		Approximate Speed of High-Pressure Compressor Single Strokes	Free Air Delivered per Minute Cubic Feet	Approximate Steam Used Compared With Single-Stage Compressors Per Cent.
		Steam Cyl. Inches	Air Cyl. Inches			Steam Cyl. Inches	Air Cyl. Inches			
50	50	11	12	100	16	9½	9½	120	60	87½
50	60	9½	13	120	17	9½	10	120	70	66⅔
50	70	9½	13	120	24	9½	13	44	70	46
50	80	11	15	100	17	9½	13	84	105	58
60	50	11	12	100	16	11	9	100	60	90
60	60	9½	13	120	16	9½	9½	120	70	50
60	70	9½	13	120	21	9½	11	87	70	57
60	80	11	15	100	17	11	12	100	105	66⅔
60	90	11	15	100	23	9½	13	70	105	48
70	50	11	12	100	16	11	9	100	60	80
70	60	11	12	100	24	9½	9½	120	60	78
70	70	9½	13	120	21	9½	10	112	70	62½
70	80	11	15	100	17	11	*11	110	105	74
70	90	11	15	100	23	9½	*11	125	105	69½
70	100	11	15	100	27	9½	13	68	105	61

80	50	11	12
80	60	11	12
80	70	9½	13
80	80	9½	13
80	90	11	15
80	100	11	15
80	110	11	15
90	50	11	11
90	60	11	12
90	70	9½	13
90	80	9½	13
90	90	11	15
90	100	11	15
90	110	11	15
90	120	11	15
100	50	11	11
100	60	11	12
100	70	9½	13
100	80	9½	13
100	90	11	15
100	100	11	15
100	110	11	15
100	120	11	15
100	130	11	15
110	50	11	11
110	60	11	12
110	70	9½	13
110	80	9½	13

100	16	11	*8½	105	60	92
100	24	9½	8½	120	60	70
120	21	9½	9	120	70	64½
120	27	9½	10	100	70	66
100	23	11	12	76	105	62
100	27	9½	11	120	105	68½
100	33	9½	13	60	105	59
100	24	9½	7½	120	45	70
100	24	9½	8	120	60	61
120	21	11	9½	95	70	52
120	27	9½	9	120	70	64
100	23	11	11	95	105	62
100	27	9½	10	110	105	59½
100	33	9½	13	61	105	54
100	38	11	15	30	105	56
100	24	11	8	65	45	66
100	24	11	8½	85	60	65
120	21	11	9	100	70	60
120	27	9½	9	115	70	57
100	23	11	*10	110	105	70
100	27	11	12	69	105	54
100	33	9½	*11	120	105	61½
100	38	9½	13	55	105	52½
100	44	11	15	27	105	54½
100	24	11	7½	81	45	64½
100	24	11	8	100	60	66
120	21	11	8½	100	70	57½
120	27	9½	8½	120	70	58

*Water-jacketed cylinder.

AIR COMPRESSORS IN SERIES-COMPOUND —(*Continued*)

Approximate Delivery Air Pressure Pounds	Steam Pressure Pounds	Low-Pressure Compressor		Approximate Speed of Low-Pressure Compressor Single Strokes	Approximate Intermediate-Reservoir Pressure Pounds	High-Pressure Compressor		Approximate Speed of High-Pressure Compressor Single Strokes	Free Air Delivered per Minute Cubic Feet	Approximate Steam Used Compared With Single-Stage Compressors Per Cent.
		Steam Cyl. Inches	Air Cyl. Inches			Steam Cyl. Inches	Air Cyl. Inches			
110	90	9½	13	120	32	9½	9½	94	70	57½
110	100	11	15	100	27	11	10½	100	105	64
110	110	11	15	100	33	9½	10	120	105	60
110	120	11	15	100	38	9½	11	90	105	59½
110	130	11	15	100	44	11	15	27	105	51
120	50	11	11	100	24	11	7	100	45	71
120	60	11	12	100	24	11	*7½	130	60	69
120	70	9½	13	120	21	11	*8	110	70	55½
120	80	9½	13	120	27	11	9	84	70	54½
120	90	9½	13	120	32	9½	9	105	70	54½
120	100	11	15	100	27	11	10	100	105	57
120	110	11	15	100	33	9½	*9½	130	105	58
120	120	11	15	100	38	9½	11	80	105	58½
120	130	11	15	100	44	11	13	42	105	54
120	140	11	15	100	49	9½	13	46	105	52½

130	50	11	11	100	24	11	7	100	45	42
130	60	11	12	100	24	11	*7	125	60	55
130	70	11	12	100	33	9½	7	110	60	56
130	80	9½	13	120	27	11	8	100	70	57½
130	90	9½	13	120	32	9½	8½	120	70	56
130	100	11	15	100	27	11	*9½	113	105	60½
130	110	11	15	100	33	11	11	73	105	53
130	120	11	15	100	38	9½	10	120	105	56
130	130	11	15	100	44	9½	11	88	105	54½
140	50	11	11	100	24	11	6½	100	45	53½
140	60	11	11	100	34	9½	6½	120	45	66
140	70	11	11	100	45	8	6	140	45	65
140	80	9½	13	120	27	11	8½	93	70	53
140	90	9½	13	120	32	9½	8	130	70	55
140	100	9½	13	120	37	9½	9	96	70	52
140	110	11	15	100	33	11	10½	80	105	50
140	120	11	15	100	38	9½	9½	120	105	53
140	130	11	15	100	44	11	12	50	105	50
140	140	11	15	100	49	11	13	38	105	50
150	50	11	10	100	35	9½	6	120	37	40
150	60	11	11	100	34	9½	6½	120	45	58
150	70	11	12	100	33	11	8	66	60	49
150	80	11	12	100	41	9½	7½	120	60	59
150	90	11	12	100	49	8	7	140	60	60
150	100	9½	13	120	37	9½	8½	107	70	53
150	110	9½	13	120	43	8	7½	140	70	53
150	120	11	15	100	38	9½	9	120	105	50
150	130	11	15	100	44	9½	9½	110	105	54
150	140	11	15	100	49	9½	11	81	105	51½

* Water-jacketed cylinder.

compressors, and the intermediate-reservoir capacity are so proportioned as to divide the work of compression about equally between the two compressors, thus obtaining the most economical condition. To obtain the final pressure and free-air capacity desired, it is important that the steam pressures and approximate speeds be maintained as nearly as possible to the values given in the accompanying table. This method of compression is called the *series-compound method.* In this method, the steam throttle of each compressor should be regulated so as to cause the relative speeds to give the required intermediate-reservoir pressure; otherwise the final delivery pressure will not correspond to that given in the table.

PISTONS AND RINGS FOR REBORED AIR-COMPRESSOR CYLINDERS

To facilitate repair work in railroad shops, reduce to a minimum the number of pieces necessary to carry in stock, and greatly simplify the ordering of repair parts, the Westinghouse Air-Brake Company has adopted standard repair pistons and rings for both air and steam cylinders as well as main-valve bushings worn in service, when rebored to certain dimensions. It recommends reboring steam and air cylinders in steps of $\frac{1}{16}$-in. and main-valve bushings in steps of $\frac{1}{32}$-in. In no case, however, should the maximum cylinder diameters specified in the accompanying tables be exceeded. Also, for both new and worn pistons the company advises that packing rings of the standard thickness, viz, the dimension of a ring fitting between the sides of a new piston groove, be employed. The adoption of packing rings of standard thickness is a decision that has been brought about by extended experience and experiments, which demonstrated that the wear of the piston groove is practically negligible except in case of defective material or lack of maintenance. A true bearing is an indispensable condition for satisfactory and efficient air-compressor operation, hence, since a true bearing is rarely if ever obtained by filing a piston ring to fit a groove, the practice is not recommended.

In order to meet all possible conditions and methods of fitting rings both to standard and to recut grooves, the

Westinghouse Air-Brake Company furnishes in addition to rings of standard thickness, cut rings for air and steam pistons .006 in. thicker than standard, uncut rings for air and steam pistons .012 in. thicker than standard, and uncut main-valve

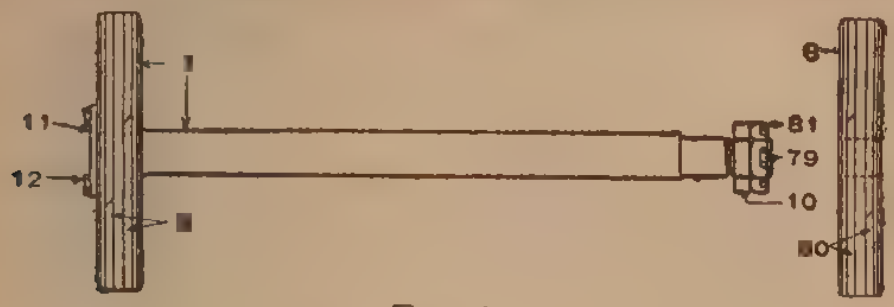

FIG. 1

piston rings .006 in. thicker than standard. No extra charge is made for repair pistons and rings of the standard stock sizes listed.

The reference numbers for the parts of the steam and air pistons for 8-in., 9½-in., and 11-in. pumps are given in Fig. 1, while the reference numbers for the parts of the main-valve pistons are given in Fig. 2. Only the sizes of pistons and rings given in the accompanying tables are made and carried in stock. The pistons and rings are designated by the diameter of the cylinder for which they are suitable, proper allowance for clearance and fitting being provided for.

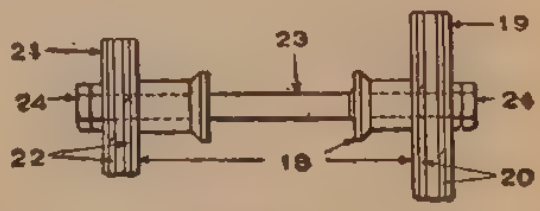

FIG. 2

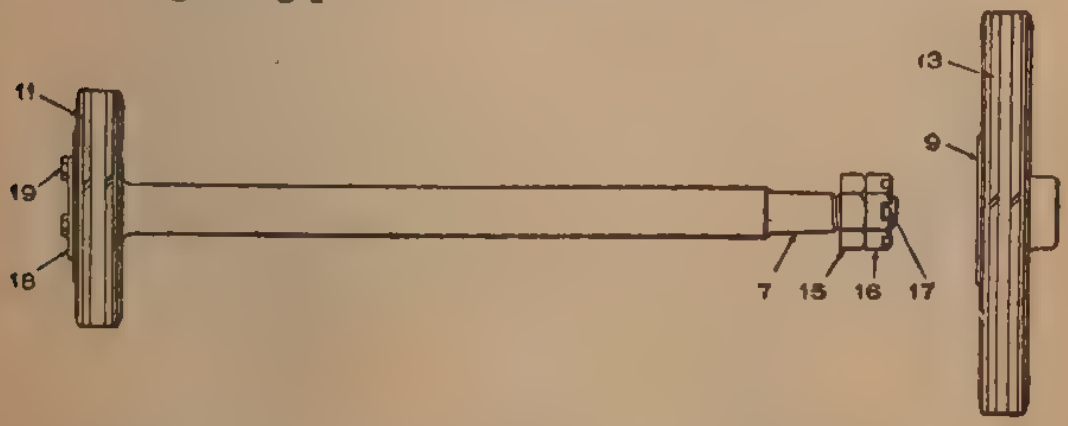

FIG. 3

The reference numbers for the parts of the high-pressure steam piston and low-pressure air piston are given in Fig. 3.

PISTONS AND RINGS FOR 8-IN., REBORED, AIR-COMPRESSOR CYLINDERS

	Ref. No.	Name of Part	Cylinder Diameters						
			8 In.	$8\frac{1}{16}$ In.	$8\frac{1}{8}$ In.	$8\frac{3}{16}$ In.	$8\frac{1}{4}$ In.	$8\frac{5}{16}$ In.	$8\frac{3}{8}$ In.
			Piece Numbers						
Steam and air pistons	7	Steam piston and rod, includes one of 11 and two of 9, 10, and 12	11,387	34,707	34,708	34,709	34,710	34,711	34,712
	8	Air piston, includes two of 80	7,255	34,683	34,685	34,687	34,689	34,691	34,693
	9 or 80	Piston ring, standard thickness, cut	4,629	13,971	13,975	13,979	13,983	13,987	13,991
	9 or 80	Piston ring, .006 in. thicker than standard, cut	13,970	13,972	13,976	13,980	13,984	13,988	13,992
	9 or 80	Piston ring, .012 in. thicker than standard, uncut	34,490	34,491	34,492	34,493	34,494	34,495	34,496

	Ref. No.	Name of Part	Cylinder Diameters				
			$2\frac{1}{8}$ In. and 3 In.	$2\frac{5}{32}$ In. and $3\frac{1}{32}$ In.	$2\frac{3}{16}$ In. and $3\frac{1}{16}$ In.	$2\frac{7}{32}$ In. and $3\frac{3}{32}$ In.	$2\frac{1}{4}$ In. and $3\frac{1}{8}$ In.
			Piece Numbers				
Main-valve pistons	18	Main-valve piston, complete, includes 19, 21, and 23, and four of 24	2,194	20,045	20,046	22,625	22,629
	19	Large main-valve piston, includes two of 20	5,167	20,050	20,051	22,623	2,768
	20	Large main-valve piston ring, standard thickness, cut	1,865	20,039	20,040	22,621	20,766
	20	Large main-valve piston ring, .006 in. thicker than standard, uncut	22,613	22,614	22,615	22,630	22,631
	21	Small main-valve piston, includes two of 22	5,168	20,048	20,049	22,624	22,628
	22	Small main-valve piston ring, standard thickness, cut	1,866	20,037	20,038	22,622	22,627
	22	Small main-valve piston ring, .006 in. thicker than standard, uncut	22,616	22,617	22,618	22,632	22,633

PISTONS AND RINGS FOR 9½-IN., REBORED, AIR-COMPRESSOR CYLINDERS

	Ref. No.	Name of Part	Cylinder Diameters						
			9½ In.	9 9/16 In.	9⅝ In.	9 11/16 In.	9¾ In.	9 13/16 In.	9⅞ In.
			Piece Numbers						
Steam and air pistons	7	Steam piston and rod, includes one of 11 and two of 9, 10, and 12	51,480	51,738	51,739	51,740	51,741	51,742	51,743
	8	Air piston, includes two of 80	51,482	51,666	51,667	51,668	51,669	51,670	51,671
	9 or 80	Piston ring, standard thickness, cut	1,924	13,700	7,631	13,924	7,632	13,931	7,633
	9 or 80	Piston ring, .006 in. thicker than standard, cut	13,917	13,918	13,921	13,925	13,928	13,932	13,935
	9 or 80	Piston ring, .012 in. thicker than standard, uncut	22,606	22,607	22,608	22,609	22,610	22,611	22,612

	Ref. No.	Name of Part	Cylinder Diameters				
			$2\frac{1}{8}$ In. and 3 In.	$2\frac{5}{32}$ In. and $3\frac{1}{32}$ In.	$2\frac{3}{16}$ In. and $3\frac{1}{16}$ In.	$2\frac{7}{32}$ In. and $3\frac{3}{32}$ In.	$2\frac{1}{4}$ In. and $3\frac{1}{8}$ In.
			Piece Numbers				
Main-valve pistons	18	Main-valve piston, complete, includes 19, 21, and 23, and four of 24	2,194	20,045	20,046	22,625	22,629
	19	Large main-valve piston, includes two of 20	5,167	20,050	20,051	22,623	2,768
	20	Large main-valve piston ring, standard thickness, cut	1,865	20,039	20,040	22,621	20,766
	20	Large main-valve piston ring, .006 in. thicker than standard, uncut	22,613	22,614	22,615	22,630	22,631
	21	Small main-valve piston, includes two of 22	5,168	20,048	20,049	22,624	22,628
	22	Small main-valve piston ring, standard thickness, cut	1,866	20,037	20,038	22,622	22,627
	22	Small main-valve piston ring, .006 in. thicker than standard, uncut	22,616	22,617	22,618	22,632	22,633

PISTONS AND RINGS FOR 11-IN., REBORED, AIR-COMPRESSOR CYLINDERS

	Ref. No.	Name of Part	Cylinder Diameters						
			11 In.	$11\frac{1}{16}$ In.	$11\frac{1}{8}$ In.	$11\frac{3}{16}$ In.	$11\frac{1}{4}$ In.	$11\frac{5}{16}$ In.	$11\frac{3}{8}$ In.
			Piece Numbers						
Steam and air pistons	7	Steam piston and rod, includes one of 11 and two of 9, 10, and 12	51,473	51,737	51,795	51,796	51,797	51,798	51,799
	8	Air piston, includes two of 80	51,475	51,698	51,699	51,700	51,701	51,702	51,703
	9 or 80	Piston ring, standard thickness, cut	1,687	13,950	11,119	13,957	12,930	13,964	13,968
	9 or 80	Piston ring, .006 in. thicker than standard, cut	13,949	13,951	13,954	13,958	13,961	13,965	13,969
	9 or 80	Piston ring, .012 in. thicker than standard, uncut	22,680	22,681	22,682	22,683	22,684	22.685	22,686

	Ref. No.	Name of Part	Cylinder Diameters				
			$2\frac{11}{16}$ In. and $3\frac{13}{16}$ In.	$2\frac{23}{32}$ In. and $3\frac{27}{32}$ In.	$2\frac{3}{4}$ In. and $3\frac{7}{8}$ In.	$2\frac{25}{32}$ In. and $3\frac{29}{32}$ In.	$2\frac{13}{16}$ In. and $3\frac{15}{16}$ In.
			Piece Numbers				
Main-valve piston	18	Main-valve piston, complete, includes 19, 21, and 23, and four 24	3,647	20,141	20,142	22,703	22,710
	19	Large main-valve piston, includes two of 20	3,645	20,139	20,140	22,704	22,711
	20	Large main-valve piston ring, standard thickness, cut	1,695	20,131	20,132	22,699	22,708
	20	Large main-valve piston ring, .006 in. thicker than standard, uncut	22,691	22,692	22,693	22,701	22,713
	21	Small main-valve piston, includes two of 22	3,646	20,137	20,138	22,705	22,712
	22	Small main-valve piston ring, standard thickness, cut	1,694	20,129	20,130	22,700	22,709
	22	Small main-valve piston ring, .006 in. thicker than standard, uncut	22,694	22,695	22,696	22,702	22,714

HIGH-PRESSURE STEAM PISTON AND RINGS FOR $8\frac{1}{2}$-IN., CROSS-COMPOUND, REBORED, AIR-COMPRESSOR CYLINDERS

Ref. No.	Name of Part	Cylinder Diameters				
		$8\frac{1}{2}$ In.	$8\frac{9}{16}$ In.	$8\frac{5}{8}$ In.	$8\frac{11}{16}$ In.	$8\frac{3}{4}$ In.
		Piece Numbers				
7	High-pressure steam piston and rod, complete, includes 15, 16, 17, 18, two of 11, and three of 19	39,664	42,144	42,145	42,146	42,147
11	High-pressure steam-piston ring, standard thickness, cut $\frac{5}{16}$ in.	11,276	37,994	35,296	37,982	38,005
11	High-pressure steam-piston ring, .006 in. thicker than standard, cut	37,991	37,995	37,998	38,000	38,006
11	High-pressure steam-piston ring, .012 in. thicker than standard, uncut	37,993	37,996	37,999	38,001	38,007

LOW-PRESSURE AIR PISTON AND RING FOR $8\frac{1}{2}$-IN., CROSS-COMPOUND, REBORED, AIR-COMPRESSOR CYLINDERS

Ref. No.	Name of Part	Cylinder Diameters					
		$14\frac{1}{2}$ In.	$14\frac{9}{16}$ In.	$14\frac{5}{8}$ In.	$14\frac{11}{16}$ In.	$14\frac{3}{4}$ In.	$14\frac{13}{16}$ In.
		Piece Numbers					
9	Low-pressure air piston, complete, includes two of 13	39,667	41,866	41,868	41,870	41,872	41,874
13	Low-pressure air-piston ring, standard thickness, cut $\frac{5}{16}$ in.	11,278	37,979	35,294	37,985	37,988	38,092
13	Low-pressure air-piston ring, .006 in. thicker than standard, cut	37,977	37,980	37,983	37,986	37,989	38,093
13	Low-pressure air-piston ring, .012 in. thicker than standard, uncut	37,978	37,981	37,984	37,987	37,990	38,094

LOW-PRESSURE STEAM PISTON AND RING FOR $8\frac{1}{2}$-IN., CROSS-COMPOUND, REBORED AIR-COMPRESSOR CYLINDER

Ref. No.	Name of Part	Cylinder Diameters					
		$14\frac{1}{2}$ In.	$14\frac{9}{16}$ In.	$14\frac{5}{8}$ In.	$14\frac{11}{16}$ In.	$14\frac{3}{4}$ In.	$14\frac{13}{16}$ In.
		Piece Numbers					
8	Low-pressure steam piston and rod, complete, includes 15, 16, 17, and two of 12...	39,665	42,158	42,159	42,160	42,161	42,162
12	Low-pressure steam-piston ring, standard thickness, cut $\frac{5}{16}$ in.....	11,278	37,979	35,294	37,985	37,988	38,092
12	Low-pressure steam-piston ring, .006 thicker than standard, cut.....	37,977	37,980	37,983	37,986	37,989	38,093
12	Low-pressure steam-piston ring, .012 in. thicker than standard, uncut.....	37,978	37,981	37,984	37,987	37,990	38,094

HIGH-PRESSURE AIR PISTON AND RING FOR $8\frac{1}{2}$-IN., CROSS-COMPOUND, REBORED, AIR-COMPRESSOR CYLINDER

Ref. No.	Name of Part	Cylinder Diameters				
		9 In.	$9\frac{1}{16}$ In.	$9\frac{1}{8}$ In.	$9\frac{3}{16}$ In.	$9\frac{1}{4}$ In.
		Piece Numbers				
10	High-pressure air piston, complete, includes two of 14.....	39,666	41,858	41,860	41,862	41,864
14	High-pressure air-piston ring, standard thickness, cut $\frac{5}{16}$ in.....	11,277	37,962	35,295	37,969	37,974
14	High-pressure air-piston ring, .006 in. thicker than standard, cut.....	37,960	37,963	37,967	37,970	37,975
14	High-pressure air-piston ring, .012 in. thicker than standard, uncut.....	37,961	37,964	37,968	37,973	37,976

The reference numbers for the low-pressure steam piston and high-pressure air piston are given in Fig. 4. The pistons and

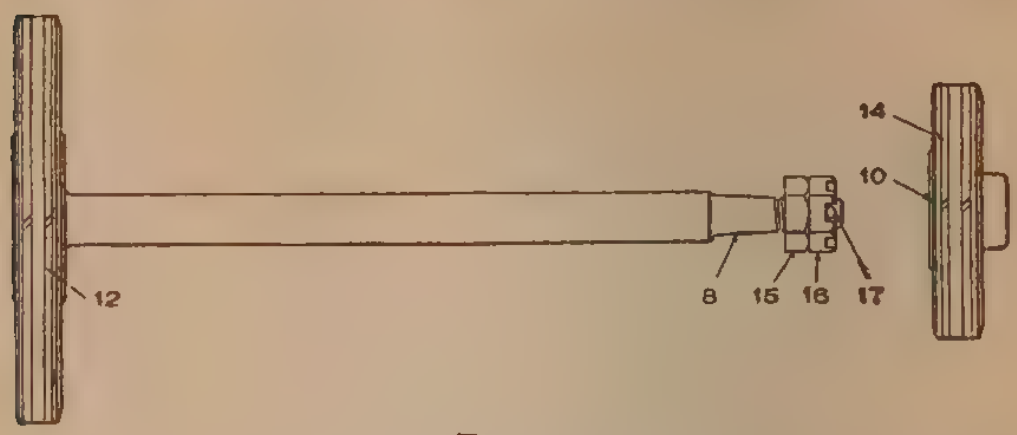

FIG. 4

rings are designated by the diameter of the cylinder for which they are suitable, proper allowance for clearance and fitting being provided for.

AIR-COMPRESSOR OIL CUPS

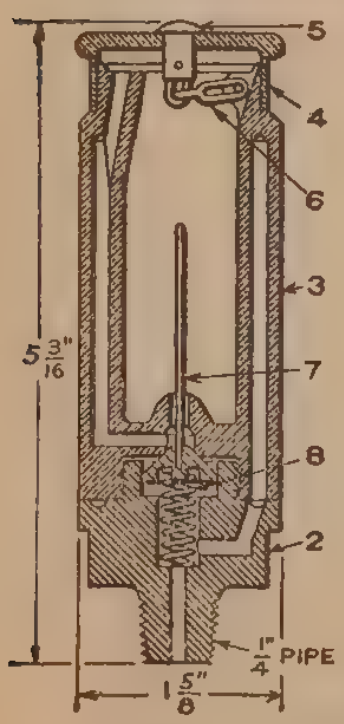

FIG. 1

Automatic, Air-Cylinder Oil Cup. The automatic, air-cylinder oil cup, shown in Fig. 1, is furnished only on special order. It is suitable for use only on the 8-in. new-style, the 9½-in., and the 11-in. compressors. Its weight is 1¾ lb. Each down stroke of the air piston produces a vacuum that draws a piston *7* down against the action of the spring *8*, this allowing a small amount of oil to feed regularly into the cylinder. The spring reseats the piston *7* as soon as the vacuum is sufficiently reduced. The piece number of the oil cup complete is 9,769; the numbers of the various parts are as follows:

Pc. No.	Ref. No.	Name of Part
9,822	2	Base.
9,767	3	Body.
9,045	4	Cap.
10,194	5	Pin in cap for chain.
9,823	6	Chain.
9,770	7	Piston.
9,772	8	Piston spring.

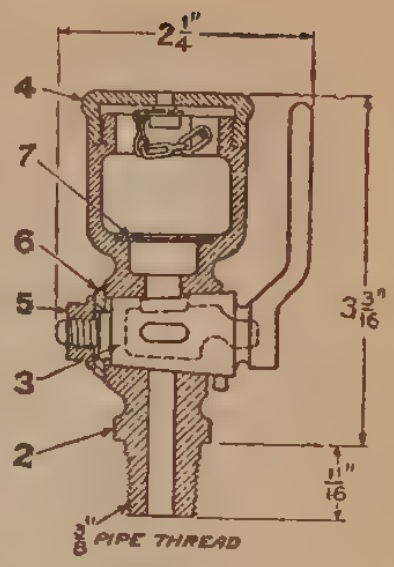

FIG. 2

Oil Cup for 8½-In., Cross-Compound Compressor.—The oil cup shown in Fig. 2, must be operated by hand. It is furnished regularly with the 8½-in., cross-compound, air compressor and weighs 1⅛ lb. The piece number of the cup complete is 21,414; the numbers of the various parts are as follows:

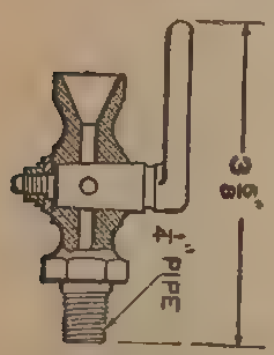

FIG. 3

Pc. No.	Ref. No.	Name of Part
21,406	2	Oil-cup body.
21,408	3	Key.
21,592	4	Cover, complete with chain.
21,410	5	Key nut.
4,750	6	Key washer.
2,046	7	Strainer.

Oil Cock.—The oil cock shown in Fig. 3 is the one that is regularly furnished, unless otherwise specified, with all steam-driven air compressors except the 8½-in. cross-compound compressor. It is operated by hand and weighs ½ lb. The piece number of the oil cock complete is 1,916.

COMPRESSION GOVERNORS

TYPES OF GOVERNORS

There are three types of compressor governors now manufactured: Type S single governor, and type SD and type SF duplex governors. The single governor is made in four sizes: the type S-3 having ¾-in. steam connection, type S-4, with 1-in. steam connection, type S-5, with 1¼-in. steam connection, and type S-6, with 1½-in. connection. The type S-3 governor

is now obsolete and is not furnished with full sets of brake equipment; repair parts, however, may be obtained. Type S-4 is considered standard size for single governors, as with the high steam pressures carried on modern locomotives, the 1-in. steam pipe and governor is believed to meet all present requirements. This governor, however, has been replaced by the type SF-4 duplex governor for standard locomotive brake schedules. The type S-5 governor is no longer recommended for use in connection with standard locomotive brake schedules, having been replaced by the SF-5 duplex governor. The type S-6 governor is furnished for any service for which it is suitable. It is recommended for all equipments that include two 11-in. or two 8½-in. simple, cross-compound air compressors.

The SD duplex governor is made in two sizes: the SD-4 (1-in.) governor and the SD-5 (1¼-in.) governor. The SD-4 type replaced the S-4 governor as standard for one 9½-in. compressor; and this, in turn, has been replaced by the SF-4 governor. The SD-4 governor is still furnished when specified. The SD-5 governor has been superseded by the SF-5 governor for locomotive equipments specifying two compressors; it can be obtained, however, when specified. The SF duplex governor is made in two sizes: the SF-4 (1-in.) governor supplied with all locomotive brake equipments requiring one 9½-in. air compressor and the SF-5 (1¼-in.) governor supplied with all locomotive brake equipments requiring two 9½-in., one 11-in., or one 8½-in. cross-compound pump.

The substitution of the duplex for the single governor was to facilitate the subsequent application of the high-speed brake in passenger service and the high-pressure control apparatus in freight service. Also, it made possible the duplex-main-reservoir regulation system when connected up as illustrated in Figs. 3 and 5.

WEIGHTS OF COMPRESSOR GOVERNORS

Type	*Weight Pounds*	*Type*	*Weight Pounds*
S-3	11	SD-4	19½
S-4	13	SD-5	25
S-5	19½	SF-4	19
S-6	23	SF-5	25

STANDARD GOVERNORS AND STEAM VALVES FOR STEAM-DRIVEN AIR COMPRESSORS

The Westinghouse Air-Brake Company made an extended series of tests to determine the conditions under which their several types and combinations of one or more compressors will operate to the best advantage. They recommend the following combinations:

No. of Compressors	*Size of Compressor*	*Size of Steam Valve*	*Size of Governor*	*Size of Main Steam Supply Pipe*	*Size of Branch to Each Compressor*
	Inches	*Inches*	*Inches*	*Inches*	*Inches*
1	9½	1	1	1	
2	9½	1¼	1¼	1¼	1
1	11	1¼	1¼	1¼	
2	11	1½	1½	1½	1¼
1	*8½	1¼	1¼	1¼	
2	*8½	1½	1½	1½	1¼

TYPE S-4 (1-IN.), COMPRESSOR GOVERNOR

The piece number for the type S-4 compressor governor, complete, shown in Fig. 1, is 24,974; for the steam portion, complete, it is 2,048; and for the diaphragm portion, complete, 20,782. The piece and reference numbers of the various parts are given in the accompanying list. The 1-in. union swivel,

Pc.No.	*Ref. No.*	*Name of Part*
2,018	2	Steam-valve body.
2,028	3	Cylinder body.
2,024	4	Cylinder cap.
2,023	5	Steam valve, complete.
2,173	6	Piston, includes 7, for standard cylinder, 2¼ in. diameter.
17,282	6	Piston, includes 7, for rebored cylinder, 2 9/32 in. diameter.
17,283	6	Piston, includes 7, for rebored cylinder, 2 5/16 in. diameter.
17,284	6	Piston, includes 7, for rebored cylinder, 2 11/32 in. diameter.
17,285	6	Piston, includes 7, for rebored cylinder, 2⅜ in. diameter.
15,013	7	Piston ring, for standard cylinder, 2¼ in. diameter.
15,583	7	Piston ring for rebored cylinder, 2 9/32 in. diameter.

*These are the 8½-in., cross-compound, air compressors.

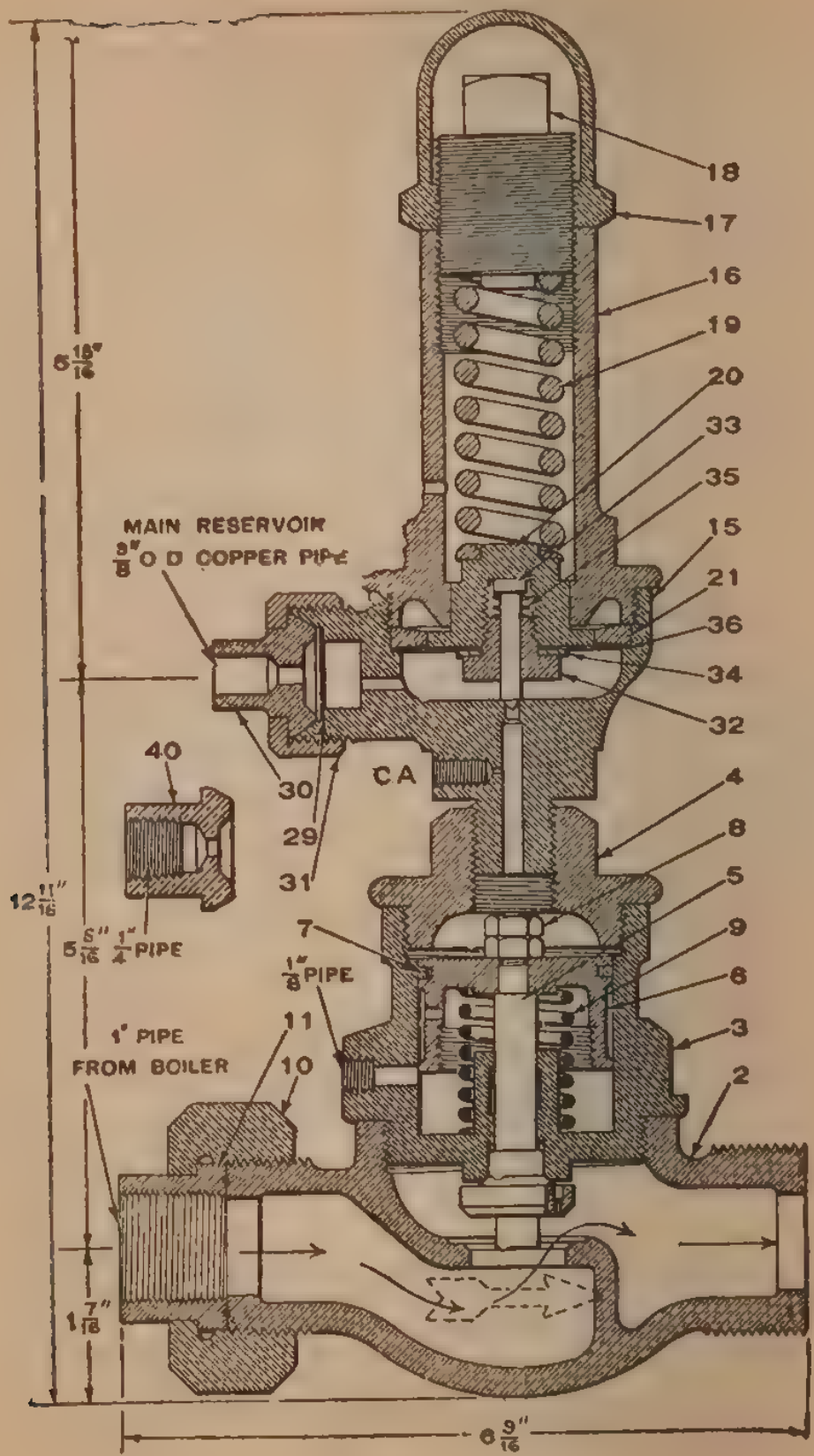
18
17
16
19
20
33
35
15
21
36
34
32
MAIN RESERVOIR
3/8" O D COPPER PIPE
40
30
29
31
CA
4
8
5
9
6
3
2
7
1/8" PIPE
11
10
1" PIPE
FROM BOILER
5 5/16" 1/4" PIPE
12 11/16"
6 15/16"
1 7/16"
6 9/16"

FIG. 1

Pc No.	Ref. No.	Name of Part
15,584	7	Piston ring for rebored cylinder, $2\frac{5}{16}$ in. diameter.
17,214	7	Piston ring, for rebored cylinder, $2\frac{11}{32}$ in. diameter.
17,215	7	Piston ring, for rebored cylinder, $2\frac{3}{8}$ in. diameter.
2,022	8	Piston nut.
2,027	9	Piston spring.
1,948	10	1-in. union nut.
1,949	11	1-in. union swivel.
2,051	11	$\frac{3}{4}$-in. union swivel.
9,033	15	Diaphragm body, includes 29.
2,033	16	Spring box.
2,034	17	Check-nut.
2,035	18	Regulating nut.
2,036	19	Regulating spring.
2,043	20	Diaphragm, complete, 32 to 36, inclusive.
1,064	21	Diaphragm ring.
2,046	29	Strainer.
5,384	30	Union swivel, $\frac{3}{8}$-in. O. D. copper pipe.
15,291	31	Union nut.
2,041	32	Diaphragm nut.
2,039	33	Diaphragm valve.
2,040	34	Diaphragm washer.
2,042	35	Diaphragm-valve spring.
2,038	36	Diaphragm, 2 pieces, each.
2,045	40	Union swivel, $\frac{1}{4}$-in. iron pipe.

Piece No. 1,949, is used with the new-style 8-in. (8″×8″×10″), the $9\frac{1}{2}$-in., and the 11-in. pumps. The $\frac{3}{4}$-in. union swivel, Piece No. 2,051, is used with the old-style 8-in. pump (8″×$7\frac{1}{2}$″×9″). Where $\frac{1}{4}$-in. iron pipe is to be used for air connection, specify Piece No. 2,049, for the S-4 steam compressor governor, complete, and Piece No. 2,047, for diaphragm portion complete; then union swivel, Ref. No. 40, will be substituted for union swivel, Ref. No. 30. If governor is to be used with old-style 8-in. (8″×$7\frac{1}{2}$″×9″) air compressor, specify Piece No. 24,975, for S-4 steam compressor governor, complete, with air connection for copper pipe, or Piece No. 10,700, for S-4 steam compressor governor, complete, with air connection for $\frac{1}{4}$-in. iron pipe; and Piece No. 10,701, for steam portion only; $\frac{3}{4}$-in. union swivel, Piece No. 2,051 will then be supplied.

Operation of Governor.—The regulating spring is, generally, adjusted to just withstand a main-reservoir pressure of 90 lb. pushing upwards on the diaphragm. When the pump is in

operation the pressure in the main reservoir increases until it reaches 90 lb. When the pressure below the diaphragm slightly exceeds the force exerted by the regulating spring, the diaphragm is raised, carrying the diaphragm valve with it. The air below the diaphragm passes by the unseated diaphragm valve into the chamber on top of the piston, forcing it down, thus seating the steam valve. As long as main-reservoir pressure remains at 90 lb., the diaphragm valve will be held from its seat and the pressure in the chamber above the piston will hold the steam valve to its seat. If the main-reservoir pressure falls below 90 lb., the thrust of the spring tending to force down the diaphragm will overcome that of the air pressure tending to force it up; consequently, the diaphragm will move downwards and seat the diaphragm valve. This shuts off the air supply from the chamber above the piston, and the air confined therein by the diaphragm valve closing will escape to the atmosphere through the vent port *c*. The pressure now being removed from above the piston, the piston spring, aided by the steam under the steam valve, forces the piston upwards, unseating steam valve, and allowing steam to pass through the governor to the pump. The piston is made enough larger than the steam valve to enable a moderate air pressure to hold the steam valve to its seat against the combined upward force of the steam pressure under the valve and the push of the piston spring.

Regulating the Governor.—To increase main-reservoir pressure, remove check-nut *17* and turn regulating nut *18* to the right, increasing the tension of the regulating spring *19* until the desired pressure is obtained; then replace check-nut *17*. To decrease main-reservoir pressure, turn the regulating nut *18* to the left, decreasing the tension on the regulating spring *19* until the pressure is decreased to the desired amount.

Testing the Governor.—The pump governor should be tested to see whether standard pressure is obtained when it stops the pump, also to see whether it will start the pump promptly when a light reduction of not more than 2 lb. is made in the pressure that operates the governor. If the pump stops either before or after standard pressure is obtained, adjust the governor by means of the adjusting screw, until it

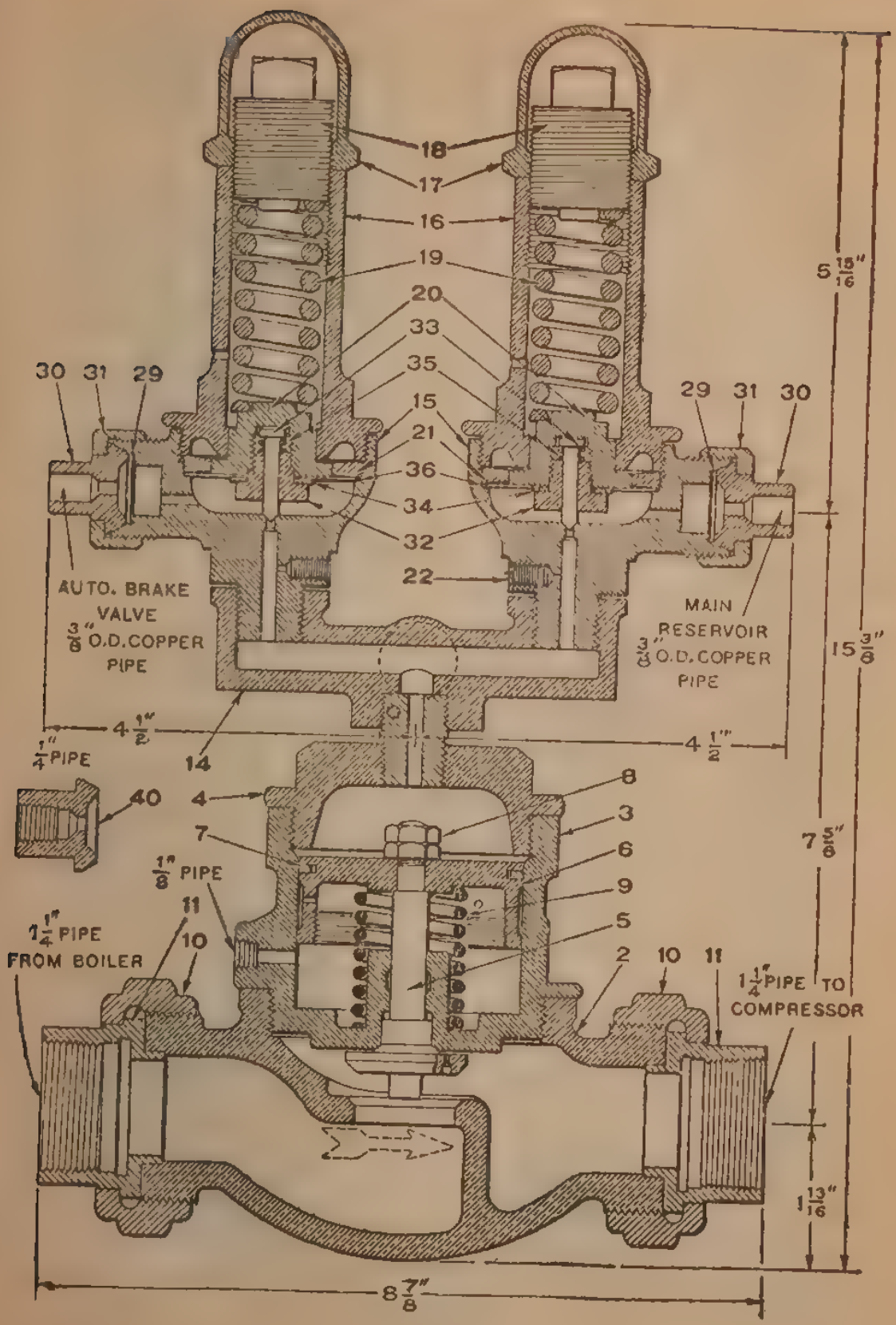
18
17
16
19
20
33
35
15
21
36
34
32
22
30 31 29
29 31 30
AUTO. BRAKE VALVE
3/8" O.D. COPPER PIPE
MAIN RESERVOIR
3/8" O.D. COPPER PIPE
5 15/16"
15 3/8"
4 1/2"
4 1/2"
1/4" PIPE
14
40
4
8
3
7
6
9
5
2
10 11
1/8" PIPE
11
10
1 1/4" PIPE FROM BOILER
1 1/4" PIPE TO COMPRESSOR
7 5/8"
1 13/16"
8 7/8"

FIG. 2

regulates the pump properly. If the governor does not start the pump promptly on a slight reduction, it may be due to leaky diaphragm valve, or to the vent port being stopped up.

TYPE SD-5 COMPRESSOR GOVERNOR

The piece number of the SD-5, compressor governor, complete, shown in Fig. 2, is 22,067; for the steam portion, complete, 17,879; and for the diaphragm portion, complete, 20,782. The piece and reference numbers of the various parts are given in the accompanying list. If $\frac{1}{4}$-in. iron pipe is to be used for air connections, specify Piece No. 18,019, for SD-5 compressor governor, complete, and Piece No. 2,047, for diaphragm portion, complete; then union swivel, Ref. No. 40 will be substituted for union swivel, Ref. No. 30.

Pc. No.	*Ref. No.*	*Name of Part*
17,668	2	Steam-valve body.
17,672	3	Cylinder body.
17,671	4	Cylinder cap.
17,670	5	Steam valve, complete.
17,916	6	Piston, includes 7, for standard cylinder, $2\frac{3}{4}$ in. diameter.
21,606	6	Piston, includes 7, for rebored cylinder, $2\frac{25}{32}$ in. diameter.
21,607	6	Piston, includes 7, for rebored cylinder, $2\frac{13}{16}$ in. diameter.
21,608	6	Piston, includes 7, for rebored cylinder, $2\frac{27}{32}$ in. diameter.
21,609	6	Piston, includes 7, for rebored cylinder, $2\frac{7}{8}$ in. diameter.
18,033	7	Piston ring, for standard cylinder, $2\frac{3}{4}$ in. diameter.
21,598	7	Piston ring for rebored cylinder, $2\frac{25}{32}$ in. diameter.
21,599	7	Piston ring for rebored cylinder, $2\frac{13}{16}$ in. diameter.
21,600	7	Piston ring for rebored cylinder, $2\frac{27}{32}$ in. diameter.
21,601	7	Piston ring, for rebored cylinder, $2\frac{7}{8}$ in. diameter.
17,674	8	Piston nut.
17,673	9	Piston spring.
2,154	10	$1\frac{1}{4}$-in. union nut.
2,155	11	$1\frac{1}{4}$-in. union swivel.
6,558	14	Siamese fitting.
9,033	15	Diaphragm body, includes 29.
2,033	16	Spring box.

Pc. No.	Ref. No.	Name of Part
2,034	17	Check-nut.
2,035	18	Regulating nut.
2,036	19	Regulating spring.
2,043	20	Diaphragm, complete, includes 32 to 36, inclusive.
1,064	21	Diaphragm ring.
6,868	22	Vent-port screw.
2,046	29	Strainer.
5,384	30	Union swivel, $\frac{3}{8}$-in. O. D. copper pipe.
15,291	31	Union nut.
2,041	32	Diaphragm nut.
2,039	33	Diaphragm valve.
2,040	34	Diaphragm washer
2,042	35	Diaphragm-valve spring.
2,038	36	Diaphragm, 2 pieces, each.
2,045	40	Union swivel, $\frac{1}{4}$-in. iron pipe.

Operation of Governor.—The operation of the duplex governor is exactly the same as that of the S-4 governor, since only one diaphragm portion operates at a time. Both the diaphragm portion and the steam portion of the duplex governor are exactly the same as the corresponding parts of the improved single governor. The only difference is that the duplex governor is provided with the Siamese fitting and an extra diaphragm portion. This valve is merely a combination of two ordinary governors, and it operates in exactly the same way as the ordinary governor, since one or the other of the diaphragm bodies is always cut out. The description of the improved single governor applies to this governor also. The pipe connections between the duplex governor and the engineer's brake valve are shown in Fig. 3.

The duplex pump governor is necessary on engines equipped with the high-speed brake and the high-pressure control or special apparatus, for loaded freight trains, and it is also necessary on many engines not used in this special service. It provides a means for carrying two pressures in the main reservoir; a moderate one while running with brake released and a much higher one while the brake is applied, so as to provide a high excess pressure for the prompt release of the brake. This is done by piping the low-pressure side of the governor to the feed-valve port *f* in the F-6 brake valve shown, a hole being drilled through the bottom case of the valve through the lower

gasket into the port. When the brake valve is in running position, the air in port *f* is at main-reservoir pressure; when this pressure reaches 90 lb. it operates the governor, which shuts off steam from the pump. During an application of the brake or while the brake valve is on lap, the pressure in port *f* is shut off from the main reservoir and is much lower than 90 lb. Usually it is the same as that in the brake pipe, and cannot be raised to 90 lb.; consequently, the low-pressure side of the governor being cut out by the brake valve, does not operate, and the

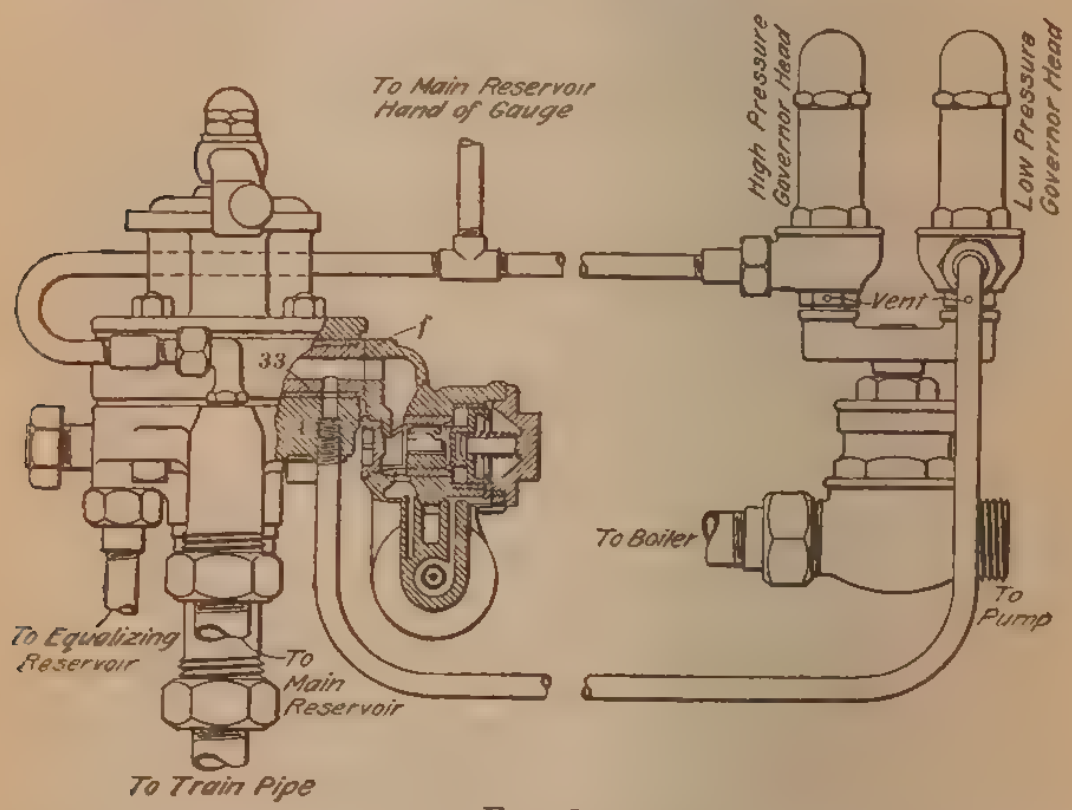

FIG. 3

pump continues to work and raises main-reservoir pressure until the high-pressure side of the governor (usually set at 110 lb. and operated by main-reservoir air) stops it.

TYPE SF-5 COMPRESSOR GOVERNOR

The piece number of the SF-5, compressor governor, complete, shown in Fig. 4, is 21,799; for the steam portion, complete, which includes No. 2 to No. 11, inclusive, it is 17,879; for the excess-pressure head, complete, 20,783; for the

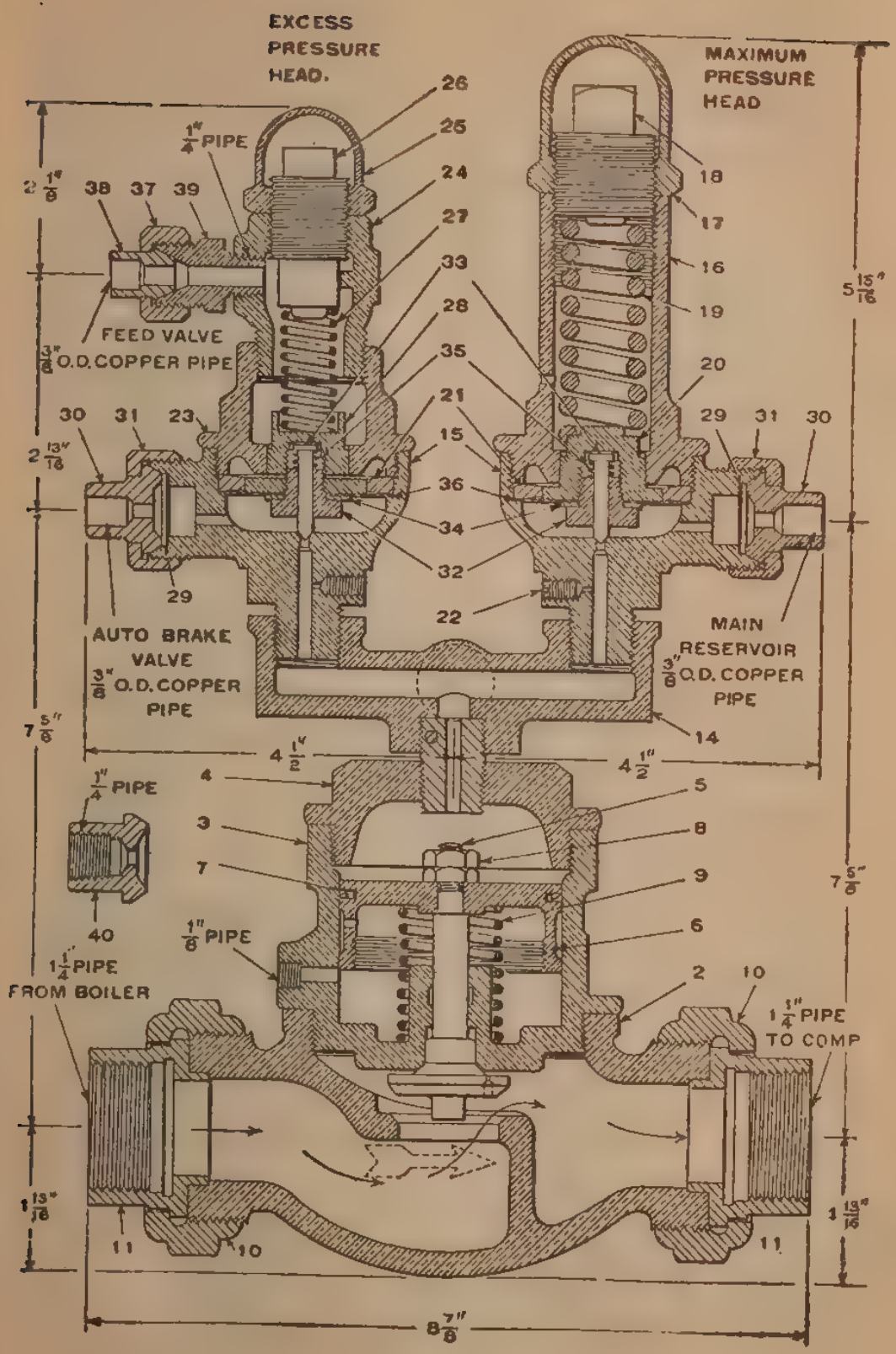
EXCESS PRESSURE HEAD.
MAXIMUM PRESSURE HEAD
1/4" PIPE
FEED VALVE
3/8" O.D. COPPER PIPE
AUTO BRAKE VALVE
3/8" O.D. COPPER PIPE
MAIN RESERVOIR
3/8" O.D. COPPER PIPE
1/4" PIPE
1/8" PIPE
1 1/4" PIPE FROM BOILER
1 1/4" PIPE TO COMP
2 1/8"
2 13/16"
7 5/8"
5 15/16"
4 1/2"
1 13/16"
8 7/8"

FIG. 4

maximum-pressure head, complete, 20,782. The SF-5 ($1\frac{1}{4}$-in.) governor is recommended with all locomotive brake equipments that include two $9\frac{1}{2}$-in., one 11-in., or one $8\frac{1}{2}$-in. cross-compound air compressor. If $\frac{1}{4}$-in. iron pipe is to be used for the air connections, specify Piece No. 18,672, for SF-5 governor, complete; Piece No. 13,552, for excess-pressure head, complete; and Piece No. 2,047, for maximum-pressure head, complete; union swivel, Ref. No. 40, will then be substituted for union swivel, Ref. No. 30, and union connection, Piece No. 20,485, which includes Ref. Nos. 37, 38, 39, will be omitted. The SF-6 duplex governor is recommended with all locomotive brake equipments which include two 11-in. or two $8\frac{1}{2}$-in. cross-compound air compressors. It weighs 40 lbs.

Pc. No.	*Ref. No.*	*Name of Part*
17,668	2	Steam-valve body.
17,672	3	Cylinder body.
17,671	4	Cylinder cap.
17,670	5	Steam valve, complete.
17,916	6	Piston, includes 7, for standard cylinder, $2\frac{3}{4}$ in. diameter.
21,606	6	Piston, includes 7, for rebored cylinder, $2\frac{25}{32}$ in. diameter.
21,607	6	Piston, includes 7, for rebored cylinder, $2\frac{13}{16}$ in. diameter.
21,608	6	Piston, includes 7, for rebored cylinder, $2\frac{27}{32}$ in. diameter.
21,609	6	Piston, includes 7, for rebored cylinder, $2\frac{7}{8}$ in. diameter.
18,033	7	Piston ring, for standard cylinder, $2\frac{3}{4}$ in. diameter.
21,598	7	Piston ring for rebored cylinder, $2\frac{25}{32}$ in. diameter.
21,599	7	Piston ring for rebored cylinder, $2\frac{13}{16}$ in. diameter.
21,600	7	Piston ring for rebored cylinder, $2\frac{27}{32}$ in. diameter.
21,601	7	Piston ring for rebored cylinder, $2\frac{7}{8}$ in. diameter.
17,674	8	Piston nut.
17,673	9	Piston ring.
2,154	10	$1\frac{1}{4}$-in. union nut.
2,155	11	$1\frac{1}{4}$-in. union swivel.
6,558	14	Siamese fitting.
9,033	15	Diaphragm body, includes 29.
2,033	16	Spring box for maximum-pressure head.
2,034	17	Check-nut for maximum-pressure head.

Pc. No.	Ref. No.	Name of Part
2,035	18	Regulating nut for maximum-pressure head.
2,036	19	Regulating spring for maximum-pressure head.
2,043	20	Diaphragm, complete, for maximum-pressure head, includes 32, 33, 34, 35, and 36.
1,064	21	Diaphragm ring.
6,868	22	Vent-port screw.
13,457	23	Spring box, for excess-pressure head.
13,456	24	Spring-box extension for excess-pressure head.
13,459	25	Check-nut for excess-pressure head.
13,458	26	Regulating nut for excess-pressure head.
2,676	27	Regulating spring for excess-pressure head.
10,734	28	Diaphragm, complete, for excess-pressure head, includes 32. 33, 34, 35, and 36.
2,046	29	Strainer.
5,384	30	Union swivel, $\frac{3}{8}$ in. O. D. copper pipe.
15,291	31	Union nut.
2,041	32	Diaphragm nut.
2,039	33	Diaphragm valve.
2,040	34	Diaphragm washer.
2,042	35	Diaphragm-valve spring.
2,038	36	Diaphragm, 2 pieces, each.
20,485		Union connection, complete, includes 37, 38, and 39.
2,001	37	Union nut.
16,286	38	Union swivel.
20,470	39	Union stud.
2,045	40	Union swivel, $\frac{1}{4}$-in. iron pipe.

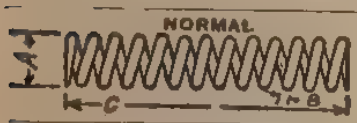

Spring Identification

Pc. No.	Out. Dia. A, In.	Dia. Wire B, In.	Free Hgt. C, In.	No. Coils	Name of Spring	Triple, Used in
*17,673	$1\frac{5}{16}$	$\frac{1}{8}$	$2\frac{1}{2}$	8	Piston	SF-5, SF-6
†2,036	1	.22	$2\frac{3}{4}$	$9\frac{1}{2}$	Regulating	SF-4, SF-5, SF-6
*2,676	$\frac{23}{32}$	.109	2	11	Regulating	SF-4, SF-5, SF-6
‡2,042	$\frac{5}{16}$	.049	$\frac{5}{16}$	$3\frac{1}{2}$	Diaphragm valve	SF-4, SF-5, SF-6
*2,027	1	.109	2	8	Piston	SF-4

*Nickeled steel. †Steel. ‡Brass.

Operation of Governor.—The duty of the SF pump governor is to so restrict the speed of the pump, when the desired main-reservoir pressure is obtained, as to prevent this pressure from rising any higher. During most of the trip, the brake valve is carried in running position to keep the brakes charged. But little excess pressure is then needed, and the governor regulates the main-reservoir pressure to about 20 lb. above the brake-pipe pressure, thus making the work of the pump easier.

Air from the main reservoir flows through the automatic brake valve (when the latter is in release, running, or holding position) to the automatic brake-valve connection *30* into the chamber below diaphragm *36*. Air from the feed-valve pipe enters at the feed-valve connection *39* to the chamber above the diaphragm *36*, thus aiding the pressure of the regulating spring *27* in holding the diaphragm down. As this spring is adjusted to about 20 lb., this diaphragm will be held down until the main-reservoir pressure in the chamber below the diaphragm slightly exceeds the combined air and spring pressure in the chamber above the diaphragm. At such time, the diaphragm will be raised, unseat its pin valve, and allow air to flow to the chamber above the governor piston, forcing the latter downwards, compressing its spring and restricting the flow of steam past steam valve *5* to the point where the pump will just supply the leakage in the brake system. When the main-reservoir pressure in chamber *36* becomes reduced, the combined spring and air pressures above the diaphragm force the diaphragm down, seating its diaphragm valve. As the chamber above the governor piston is always open to the atmosphere through the small vent port, the pressure in that chamber will then escape to the atmosphere and allow the piston spring, and steam pressure below the steam valve *5*, to raise the valve and the governor piston. Since the connection from the main reservoir to the chamber below the diaphragm *36* is open only when the handle of the automatic brake valve is in release, running, or holding positions, in the other positions this governor head is cut out. The main-reservoir connection in the maximum-pressure head should be connected to the main-reservoir cut-out cock, or to the pipe connecting the two main reservoirs, so

as to be always in communication with the main reservoir, so that when the excess-pressure head is cut out by the brake valve, or by the main-reservoir cut-out cock, this head will control the pump. When main-reservoir pressure in the cham-

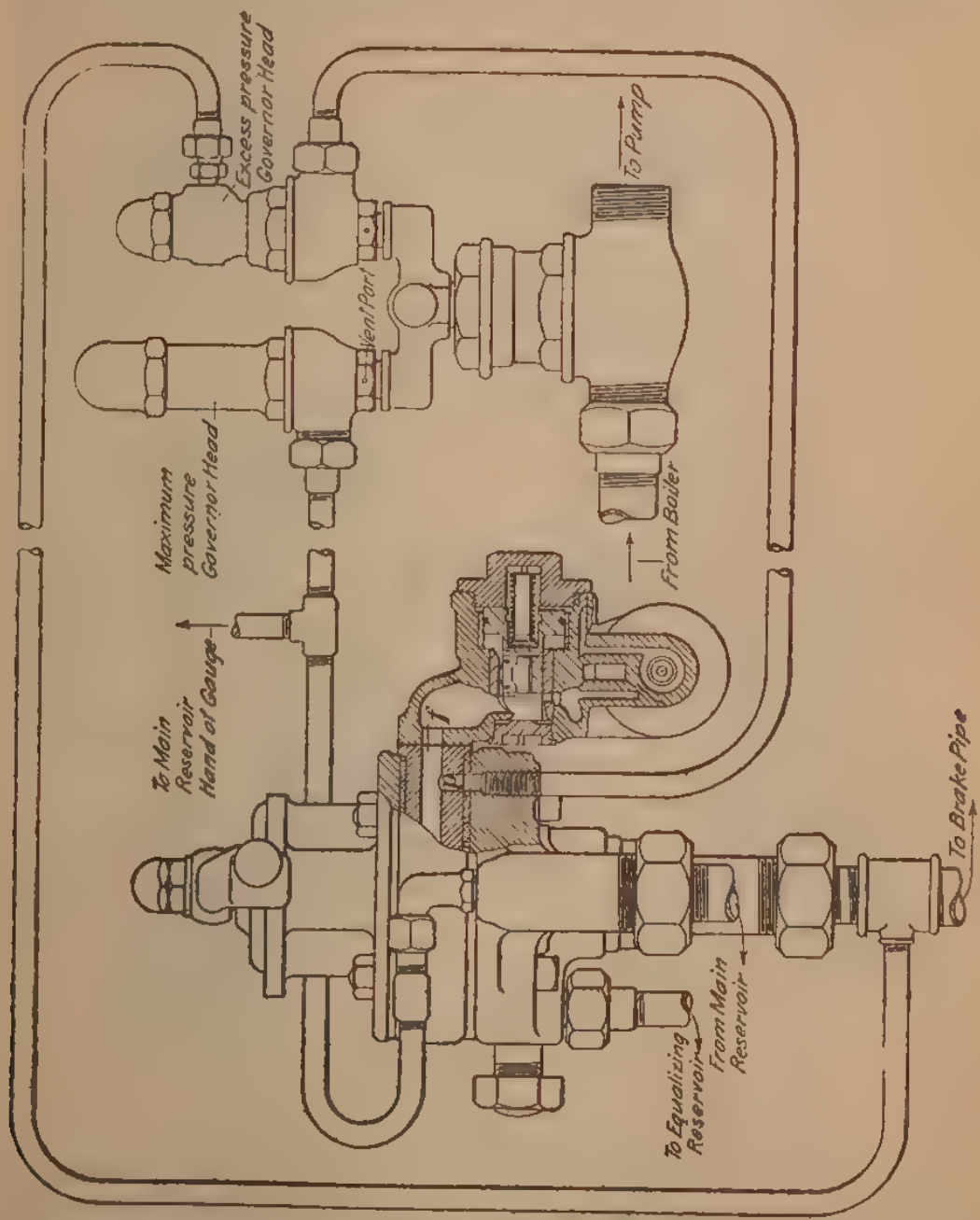

FIG. 5

ber below the diaphragm *36* exceeds the adjustment of spring *19*, the diaphragm will raise the diaphragm valve and allow air to flow into the chamber above the governor piston, controlling the pump as just described. The adjustment of spring *19* thus

forms the maximum limit of main-reservoir pressure. Thus, when the brake-valve handle is in running position, the excess-pressure side of the governor limits the main-reservoir pressure to 20 lb. above the feed-valve pressure, no matter what feed-valve pressure is being carried. The maximum-pressure side forms a limit beyond which the main-reservoir pressure can-

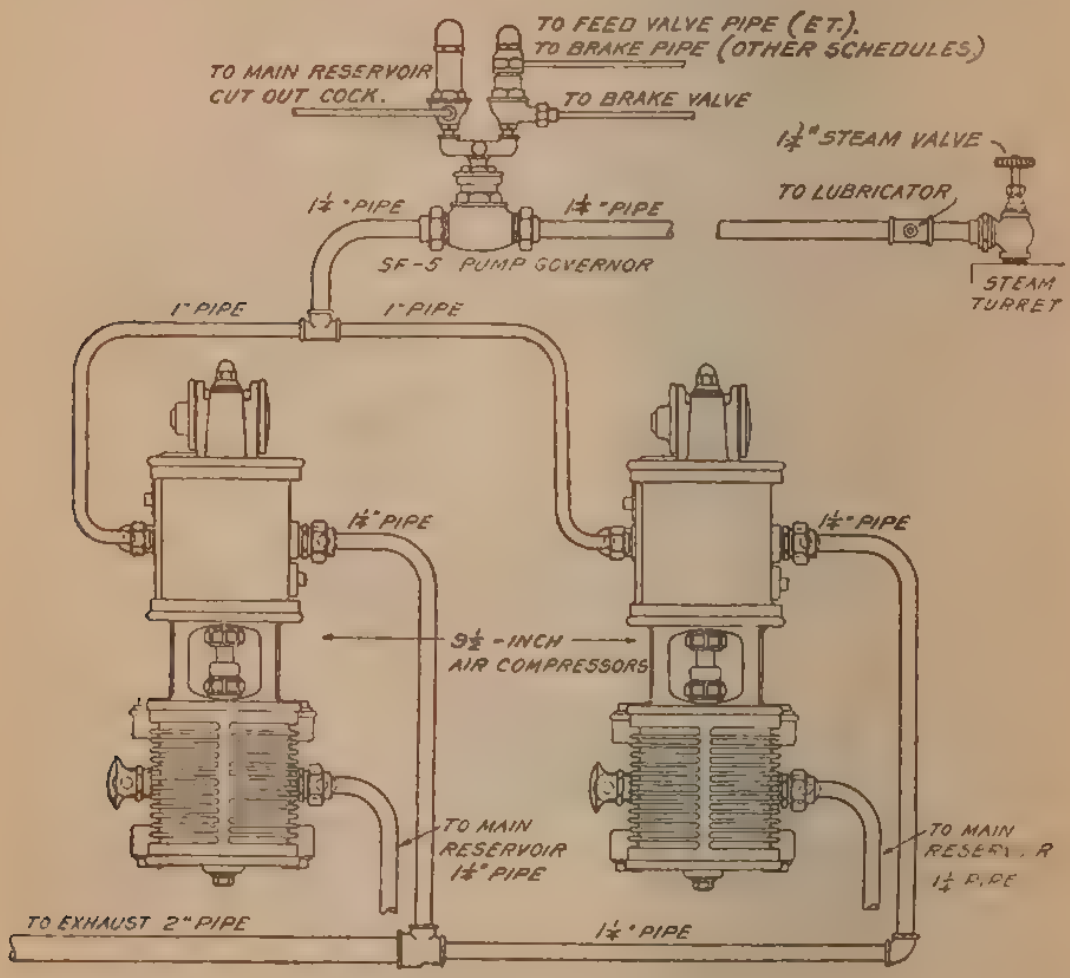

(*a*)

FIG. 6

not rise. Therefore, a change in feed-valve regulation automatically produces a corresponding change in the governing pressures. As each governor head has a vent port *22*, from which a small amount of air escapes whenever pressure is present in the chamber above the governor piston, to avoid an unnecessary waste of air, one of these should be plugged with a vent-port screw *22*.

Adjusting the Governor.—To adjust the excess-pressure head of the SF-5 governor place the handle of the automatic brake valve in running position, remove the cap nut *25* and turn the adjusting nut *26* until the compression of spring *27* gives the desired difference between main-reservoir and brake-pipe pressures.

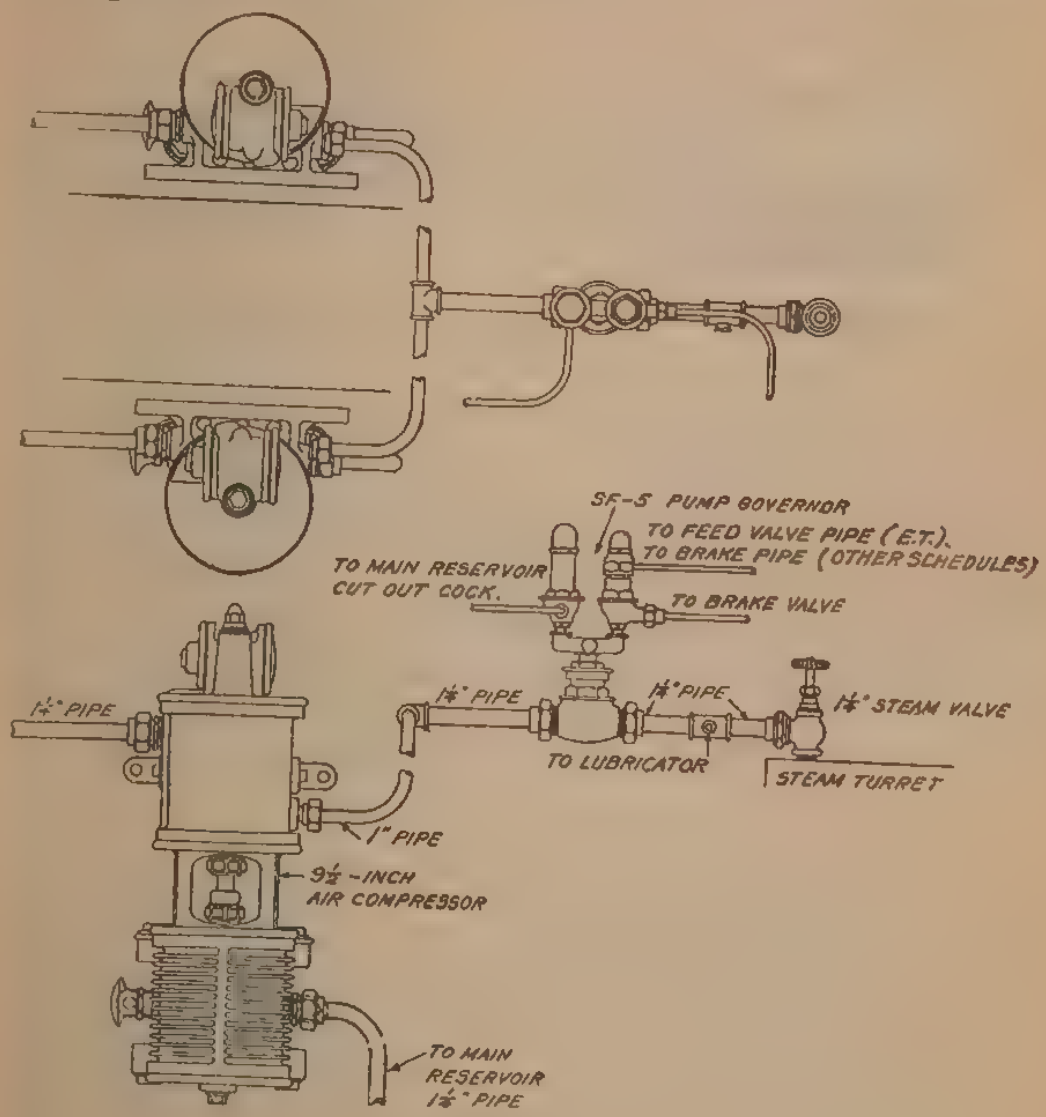

(*b*)

FIG. 6

To adjust the maximum-pressure head, place the handle of the automatic brake valve on lap, remove the cap nut *17*, and turn adjusting nut *18* until the compression of the spring *19* causes the pump to stop at the maximum main-reservoir pressure required. It is recommended that spring *27* be

adjusted for 20 lb. excess pressure, and spring *19* for a pressure ranging from 120 to 140 lb., depending on the service.

Pipe Connections to Old-Standard Equipment.—The method of connecting an SF governor with the old standard equipment is shown in Fig. 5. When so connected it is applicable to the high-speed brake or the double-pressure control equipments without changing or moving any of the governor-pipe connections. By regulating the maximum-pressure side to, say, 140 lb., duplex main-reservoir regulation may be obtained, for feed-valve pressures up to 110 lb, since the excess-pressure head will stop the pump at 130 lb. thereby giving an excess pressure of 10 lb.

PIPING DIAGRAMS FOR TWO AIR COMPRESSORS

For two 9½-in. compressor installations, a 1¼-in. steam supply pipe should be used together with an SF-5 (1¼-in.) governor and a 1¼-in. steam valve. A 1-in. supply pipe, governor, and steam valve are too small and throttle the supply of steam, reducing the speed of the compressors too much. Where both pumps are on one side of the locomotive, they should be connected up as in Fig. 6 (*a*); where they are on opposite sides of the locomotive, connected up as in (*b*). For two 11-in. pumps, a 1½-in. supply pipe, governor, and steam valve should be used, the pumps being connected up as shown.

AIR-STORAGE RESERVOIRS

The necessity for an air reservoir in connection with nearly all air compressor plants is well understood. It receives the air in pulsations from the compressor and delivers it at uniform pressure. The reservoir also acts as a depository for such moisture, oil, and other foreign matter as passes through the compressor. The condensation of water resulting from the compression of air can never be entirely prevented, but the amount may be lessened by obtaining the coolest and driest air possible for the air intake to the compressor, and by locating the reservoir and radiating pipe in the coolest possible place. These conditions are requisite for the most satisfactory service. Each reservoir should have a drain

cock or small pipe connection at its lowest point by means of which all residue may be drawn off at frequent intervals, as water or oil collecting will soon materially decrease the air-storage capacity of the reservoirs.

Fig. 1 shows the welded pipe, that is, steel tubing with heads welded in, furnished in diameters of 16 in. and under, and

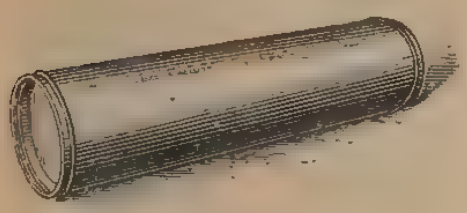

FIG. 1

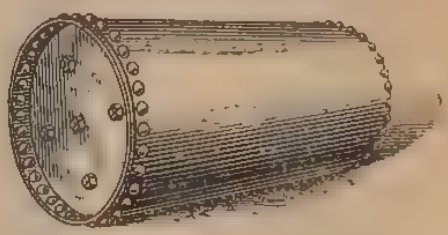

FIG. 2

Fig. 2 the riveted type, made of steel sheets with longitudinal seam and heads riveted, furnished in diameters of 18½ in. and over. The reservoirs are tested to a pressure of 140 lb. They are built to the W. A. B. standard specifications for railroad service and designed for pressures up to 125 lb. per sq. in. The accompanying table gives the standard sizes of these reservoirs; they may be placed either vertically or horizontally, as preferred. In either case, however, it is advisable to have the air inlet and outlet near the top and on opposite sides of the reservoir, but not directly opposite each other, and the drain cock should be located at the lowest point.

Main Reservoir.—The standard main reservoir is a store chamber in which a large supply of compressed air is maintained to charge the brake pipe and auxiliaries; to release brakes, if set, by charging the brake pipe to a higher pressure than that in the auxiliaries; and to feed any brake-pipe leaks while the brakes are released. Also, it often provides air for operating sand blowers, bell ringers, blow-off cocks, water scoop, and other devices with which the engine is equipped. The usual main-reservoir pressure is 90 lb., but this is exceeded in mountainous districts when handling very long trains, when the train is equipped with the high-speed brake, or when the Westinghouse special attachment for controlling heavy trains on long down grades is used.

AIR-STORAGE RESERVOIRS

Size Inches	Approximate Capacity Cubic Inches	Size Inches	Approximate Capacity Cubic Inches
12 × 60	6,000	20½ × 72*	21,700
12 × 66	6,600	20½ × 78	23,600
12 × 72	7,200	20½ × 84*	25,500
12 × 78	7,800	20½ × 90	27,400
12 × 84	8,500	20½ × 96*	29,200
14 × 54	7,300	20½ × 102	31,000
14 × 60	8,200	20½ × 108	33,000
14 × 66	9,000	20½ × 114	35 000
14 × 72	9,900	20½ × 120	37,000
14 × 78	10,800	22½ × 36	12,600
14 × 84	11,600	22½ × 42	14,900
16 × 48	8,500	22½ × 48*	17,100
16 × 54	9,600	22½ × 54	19,400
16 × 60	10,800	22½ × 60*	21,700
16 × 66	11,900	22½ × 66	24,000
16 × 72	13,000	22½ × 72*	26,300
16 × 78	14,200	22½ × 78	28,500
16 × 84	15,300	22½ × 84*	30,800
16 × 90	16,400	22½ × 90	33,100
16 × 96	17,600	22½ × 96*	35,400
16 × 102	18,700	22½ × 102	37,700
16 × 108	19,800	22½ × 108	39,900
16 × 114	21,000	22½ × 114	42,200
16 × 120	22,000	22½ × 120	44,500
18½ × 42	10,000	24½ × 36	15,000
18½ × 48*	11,500	24½ × 42	17,700
18½ × 54	13,000	24½ × 48*	20,400
18½ × 60*	14,500	24½ × 54	23,100
18½ × 66	16,100	24½ × 60*	25,800
18½ × 72*	17,600	24½ × 66	28,500
18½ × 78	19,100	24½ × 72*	31,200
18½ × 84*	20,600	24½ × 78	34,000
18½ × 90	22,200	24½ × 84*	36,700
18½ × 96*	23,700	24½ × 90	39,400
18½ × 102	25,200	24½ × 96*	42.100
18½ × 108	26,700	24½ × 102	44,800
18½ × 114	28,300	24½ × 108	47,500
18½ × 120	29,800	26½ × 36	17,500
20½ × 36	10,400	26½ × 42	20,700
20½ × 42	12,300	26½ × 48*	23,900
20½ × 48*	14,200	26½ × 54	27,100
20½ × 54	16,000	26½ × 60*	30,300
20½ × 60*	18,000	26½ × 66	33,500
20½ × 66	19,800	26½ × 72*	36,700

* These sizes are always in stock.

TABLE—*(Continued)*

Size Inches	Approximate Capacity Cubic Inches	Size Inches	Approximate Capacity Cubic Inches
26½ × 78	39,800	28½ × 90	53,600
26½ × 84*	43,000	28½ × 96*	57,300
26½ × 90	46,200	30½ × 36	23,400
26½ × 96*	49,400	30½ × 42	27,600
28½ × 36	20,300	30½ × 48*	31,800
28½ × 42	24,000	30½ × 54	36,100
28½ × 48*	27,700	30½ × 60*	40,300
28½ × 54	31,400	30½ × 66	44,600
28½ × 60*	35,100	30½ × 72*	48,800
28½ × 66	38,800	30½ × 78	53,000
28½ × 72*	42,500	30½ × 84*	57,300
28½ × 78	46,200	30½ × 90	60,500
28½ × 84*	49,900	30½ × 96*	64,800

The main reservoir varies in size according to the kind of service—freight or passenger—in which the engine is employed. In the best practice, a main reservoir of not less than 40,000 cu. in. capacity for passenger, and from 50,000 to 70,000 cu. in. for freight, service is used. For freight service the following schedule is recommended.

Pump Capacity	*Main-Reservoir Capacity Cubic Inches*
One 9½-in.	50,000
Two 9½-in.	65,000
One 11-in.	60,000
Two 11-in.	70,000
One 8½-in. cross-compound	70,000

If the train is long and the main reservoir small, a high pressure must be carried in the latter in order that it may equalize with the brake pipe at a sufficiently high pressure to promptly release the brakes and recharge the auxiliaries. When the main reservoir is large, a much lower reservoir pressure can be carried, and the pump can also store a greater quantity of air while the brakes are applied. When, therefore, the main reservoir is small, the pump must work both

*These sizes are always in stock.

STYLE OF CONSTRUCTION OF MAIN RESERVOIRS

Type of Construction	Shell, O. D. Pipe; Convex Heads Welded in		Shell, O. D. Pipe; Semiconvex Heads Welded in				Shell, Riveted Joint; Semiconvex Heads Welded in			Shell, Riveted Joint; Semiconvex Heads Riveted in			
Outside diameter in inches	10	12	14	16	14	16	18½	20½	22½	24½	26½	28½	30½
Length over all	Any	Any	72 in. and less		Over 72 in.		Any	Any	Any	Any	Any	Any	Any
Pipe tap A, in inches	¼	¼	¼	½	½		½	½	½	½	½	½	½
Pipe tap B, in inches	1	1	1	1	1¼		1¼	1¼	1¼	1¼	1¼	1¼	1¼

faster (or longer) and against a higher pressure, either of which tends to cause overheating. A much higher pressure is required in the main reservoir than in the brake pipe, not only to release brakes, but also to force the air through the brake pipe in the shortest time possible and thus release all brakes on a long train promptly and as nearly simultaneous as possible. About 20 lb. more pressure in the reservoir than in the brake pipe is usually needed with a large reservoir; with a small reservoir, more than 20 lb. is necessary. In ordering main reservoirs, the pressure, outside diameter, and length over all, in inches, and any special features, such as special pipe tapping, handholes, etc., must always be given.

Styles of Reservoirs.—Main reservoirs are made in three styles: The shell of drawn tubing with convex heads welded

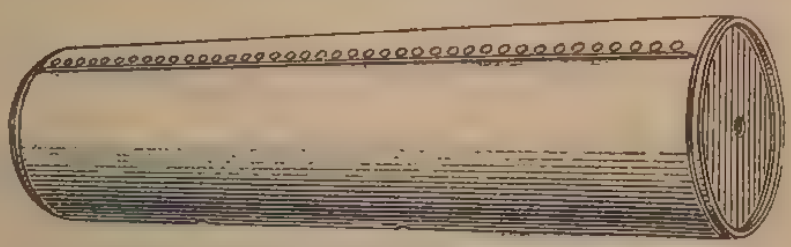

in; the shell of drawn tubing with semiconvex heads welded in; the shell riveted with semiconvex heads welded in. Also, reservoirs are made with brazed seams for shell and heads.

Standard Tapping.—The standard method of tapping main reservoirs is shown in the accompanying figure. Pipe tap B is central, and there is one tap in each head. If there are two tap holes in the same reservoir head, they must not be closer than 4 in. between centers. Also, no hole should be placed closer to the shell than 5 in. from the center of the hole to the shell of the reservoir. The proper size of pipe taps for the different size reservoirs is given in the table showing the style of construction.

Enameled Reservoirs.—Reservoirs enameled by special process are recommended on account of their durability and because both inside and outside surfaces are protected against corrosion, oxidation, etc., thereby preserving the initial factor of safety. The reservoir is thoroughly cleaned in an acid bath, neutralized by an alkali, and carefully washed

STANDARD STOCK SIZES OF MAIN RESERVOIRS

Size Over All Inches	Capacity Cubic Inches	Weight Pounds	Size Over All Inches	Capacity Cubic Inches	Weight Pounds	Size Over All Inches	Capacity Cubic Inches	Weight Pounds	Size Over All Inches	Capacity Cubic Inches	Weight Pounds
10× 36	2,368	71	14 × 72	10,164	199	18½×102*	25,368	368	22½×138	50,898	766
10× 42	2,813	80	14 × 78	11,011	212	18½×108	26,916	386	22½×144	53,179	796
10× 48	3,258	88	14 × 84	11,917	225	18½×114*	28,464	404	22½×150	55,460	825
10× 54	3,703	96	14 × 90	12,794	238	18½×120*	30,052	422	22½×156	57,740	854
10× 60	4,149	105	14 × 96	13,671	252	18½×126	31,600	440	22½×162	60,021	883
10× 66	4,594	113	14 ×102	14,548	265	18½×132	33,148	458	22½×168	62,302	912
10× 72	5,040	121	14 ×108	15,424	278	18½×138	34,696	476	24½× 36	14,484	339
10× 78	5,485	129	14 ×114	16,301	291	18½×144*	36,244	494	24½× 42	17,198	371
10× 84	5,930	138	14 ×120	17,178	304	18½×150	37,792	512	24½× 48	19,912	403
10× 90	6,375	146	14 ×126	18,054	317	18½×156	39,341	530	24½× 54	22,627	435
10× 96	6,821	154	14 ×132	18,931	330	18½×162	40,889	548	24½× 60	25,341	467
10×102	7,266	163	14 ×138	19,808	343	18½×168	42,437	566	24½× 66	28,055	499
10×108	7,711	171	14 ×144	20,684	356	20½× 36*	10,158	199	24½× 72	30,770	531
10×114	8.156	179	14 ×150	21,561	370	20½× 42	12,149	220	24½× 78	33,484	563
10×120	8,602	188	14 ×156	22,438	383	20½× 48*	14,003	239	24½× 84	36,198	595
10×126	9,047	195	14 ×162	23,315	396	20½× 54*	16,013	259	24½× 90	38,913	627
10×132	9,493	204	14 ×168	24,192	409	20½× 60*	17,946	279	24½× 96	41,627	658
10×138	9,938	212	16 × 36	6,815	162	20½× 66*	19,878	299	24½×102	44,341	690
10×144	10,383	221	16 × 42	7,436	181	20½× 72*	21,811	319	24½×108	47,056	722
10×150	10,828	229	16 × 48	8,577	199	20½× 78	23,743	339	24½×114	49,770	754
10×156	11,273	237	16 × 54	9,718	217	20½× 84*	25,675	359	24½×120	52,484	786
10×162	11,719	246	16 × 60*	10,859	235	20½× 90	27,608	379	24½×126	55,199	818

10×168	12,164	254	16 × 66	13,140	254	20½× 96*	29,540	399	24½×132	57,913	850
12× 36	3,415	100	16 × 72*	14,281	272	20½×102*	31,472	419	24½×138	60,628	882
12× 42	4,053	111	16 × 78	15,422	290	20½×108	33,405	439	24½×144	63,342	914
12× 48	4,692	122	16 × 84*	16,563	309	20½×114*	35,337	459	24½×150	66,056	946
12× 54	5,330	134	16 × 90	17,704	327	20½×120	37,269	479	24½×156	68,771	978
12× 60	5,969	145	16 × 96*	18,845	345	20½×126	39,202	499	24½×162	71,485	1,010
12× 66	6,607	156	16 ×102	19,986	364	20½×132*	41,134	519	24½×168	74,199	1,042
12× 72	7,246	167	16 ×108*	21,127	382	20½×138	43,067	539	26½× 36	16,428	331
12× 78	7,884	179	16 ×114	22,268	400	20½×144	44,999	559	26½× 42*	19,536	366
12× 84	8,523	190	16 ×120*	23,408	419	20½×150	46,931	579	26½× 48	22,644	400
12× 90	9,161	201	16 ×126*	24,549	437	20½×156	48,864	599	26½× 54	25,722	434
12× 96	9,800	212	16 ×132	25,690	455	20½×162	50,796	619	26½× 60*	28,860	469
12×102	10,438	223	16 ×138*	26,831	473	20½×168	52,728	639	26½× 66	31,968	504
12×108	11,077	235	16 ×144	27,972	492	22½× 36	12,125	269	26½× 72	35,076	538
12×114	11,715	246	16 ×150	29,113	510	22½× 42*	14,406	298	26½× 78	38,184	573
12×120	12,354	257	16 ×156	30,254	528	22½× 48	16,686	327	26½× 84	41,292	607
12×126	12,992	268	16 ×160*	30,615	540	22½× 54	18,967	356	26½× 90	44,400	642
12×132	13,631	279	16 ×162	31,395	551	22½× 60*	21,248	386	26½× 96	47,508	677
12×138	14,269	291	16 ×168	32,536	567	22½× 66	23,529	415	26½×102	50,616	711
12×144	14,908	302	18½× 36	8,339	170	22½× 72*	25,810	442	26½×108	53,724	746
12×150	15,546	313	18½× 42*	9,887	188	22½× 78	28,090	437	26½×114	56,832	780
12×156	16,185	324	18½× 48	11,435	206	22½× 84*	30,371	503	26½×120	59,940	815
12×162	16,823	335	18½× 54	12,983	224	22½× 90	32,652	532	26½×126	63,048	849
12×168	17,462	347	18½× 60*	14,531	242	22½× 96*	34,933	561	26½×132	66,156	884
14× 36	4,914	121	18½× 66*	16,079	260	22½×102	37,214	590	26½×138	69,264	918
14× 42	5,791	134	18½× 72*	17,627	278	22½×108*	39,494	620	26½×144	72,372	953
14× 48	6,667	147	18½× 78	19,175	296	22½×114	41,775	649	26½×150	75,480	987
14× 54	7,544	160	18½× 84*	20,723	314	22½×120*	44,056	679	26½×156	78,588	1,022
14× 60	8,421	173	18½× 90	22,271	332	22½×126	46,336	707	26½×162	81,696	1,057
14× 66	9,297	186	18½× 96*	23,820	350	22½×132	48,618	737	26½×168	84,804	1,097

*Indicates enameled reservoirs carried in stock.

STANDARD STOCK SIZES OF MAIN RESERVOIRS—(*Continued*).

Size Over All Inches	Capacity Cubic Inches	Weight Pounds	Size Over All Inches	Capacity Cubic Inches	Weight Pounds	Size Over All Inches	Capacity Cubic Inches	Weight Pounds	Size Over All Inches	Capacity Cubic Inches	Weight Pounds
28½ × 36	20,324	428	28½ × 108	64,856	875	30½ × 42	28,350	497	30½ × 108	76,571	920
28½ × 42	24,035	465	28½ × 114	68,567	912	30½ × 48*	32,734	536	30½ × 114	80,954	958
28½ × 48	27,746	503	28½ × 120	72,278	949	30½ × 54	37,117	574	30½ × 120	85,338	996
28½ × 54	31,457	540	28½ × 126	75,989	986	30½ × 60*	41,501	613	30½ × 126	89,722	1,035
28½ × 60	35,168	577	28½ × 132	79,700	1,023	30½ × 66	45,885	651	30½ × 132	94,105	1,073
28½ × 66	38,879	614	18½ × 138	83,411	1,061	30½ × 72*	50,268	689	30½ × 138	98,489	1,111
28½ × 72	42,590	651	28½ × 144	87,122	1,098	30½ × 78	54,652	728	30½ × 144	102,873	1,149
28½ × 78	46,301	687	28½ × 150	90,833	1,135	30½ × 84	59,036	766	30½ × 150	107,257	1,188
28½ × 84	50,012	726	28½ × 156	94,544	1,172	30½ × 90	63,420	804	30½ × 156	111,640	1,126
28½ × 90	53,723	763	28½ × 162	98,255	1,209	30½ × 96	67,803	842	30½ × 162	116,024	1,264
28½ × 96	57,434	800	28½ × 168	101,966	1,247	30½ × 102	72,187	881	30½ × 168	120,408	1,303
28½ × 102	61,145	837	30½ × 36	23,966	459						

*Indicates enameled reservoirs carried in stock.

and dried. It is then dipped in warm enamel to coat both inside and outside surfaces, and baked at a high temperature, the dipping and baking operations being repeated to give a second coat. The mark XXE just above the pipe tap in the head of a reservoir indicates enamel reservoir. The mark XX indicates plain reservoir.

Location of Reservoirs.—It is strongly recommended that the main-reservoir capacity be divided into two reservoirs of suitable dimensions, so located and so connected by piping, as to give the greatest possible radiating surface to cool the air to atmospheric temperature, and cause the precipitation of as much moisture as possible before the air is drawn out of the reservoir. Main reservoirs should be located in as cool a position as possible and never at the side of the firebox.

The standard sizes of main reservoirs are designed for a maximum pressure of 140 lb.; special reservoirs built to carry more than 140 lb. can be obtained on special specifications.

Calculating Main-Reservoir Capacity.—To find the capacity of a main reservoir, apply the following rule:

Rule.—*To calculate the approximate capacity of a reservoir, in cubic inches, multiply its cross-sectional area, in square inches, by the inside length, in inches.*

EXAMPLE 1.—What is the capacity of a reservoir 20 in. in diameter and 100 in. in length (inside measurements)?

SOLUTION.—The cross-sectional area of the reservoir is $20 \times 20 \times .7854 = 314.16$ sq. in. The length is 100 in. Therefore, the capacity is $314.16 \times 100 = 31{,}416$ cu. in.

To calculate approximately the capacity of a main reservoir from its outside dimensions, subtract $\frac{1}{2}$ in. from its diameter and 3 in. from its length, so as to reduce the outside measurements to inside measurements; then proceed as before. The $\frac{1}{2}$ in. from the diameter allows for the thicknesses of metal in the walls, while the 3 in. from the length allows for the thickness of metal of the ends and for the way the ends are secured in place.

EXAMPLE 2.—What is the capacity of a main reservoir $26\frac{1}{2}$ in. in diameter by 96 in. long?

SOLUTION.—The internal dimensions of the reservoir (found by subtracting ½ in. from diameter and 3 in. from the length) are 26 in. in diameter by 93 in. long. The area of a 26-in. reservoir is 530.93 sq. in.; therefore, its capacity is 530.93 ×93=49,377 cu. in., say 49,400.

The accompanying table gives the cross-sectional areas of the standard sizes of main reservoirs as well as the special sizes, 33½, 34½, and 36½ in. The areas were calculated after subtracting ½ in. from the diameters, so that multiplying them by the length of a reservoir, after subtracting 3 in. from its length, will give the approximate capacity of the reservoir, in cubic inches.

CROSS-SECTIONAL AREAS OF AIR-BRAKE MAIN RESERVOIRS

Diameter Inches	Cross Sectional Area Square Inches	Diameter Inches	Cross-Sectional Area Square Inches
10	70.88	24½	452.39
12	103.87	26½	530.93
14	143.14	28½	615.75
16	188.69	30½	706.86
18½	254.47	32½	804.20
20½	314.16	34½	907.90
22½	380.13	36½	1,017.90

ENGINEER'S BRAKE VALVES

HISTORY OF VALVE

The engineer's brake valve is that part of the air-brake equipment by means of which the engineer can control the action of the brakes. It is located in the cab of the engine in a position convenient to the engineer. Its function is to regulate the flow of air from the main reservoir to the brake pipe, and through the chamber in the brake valve to the small equalizing reservoir under the right running board; from the brake pipe through the engineer's valve to the atmosphere; and from the chamber, the equalizing reservoir, and brake pipe to the atmosphere; also, if desired, it prevents any flow, of air whatsoever. The equalizing reservoir is connected to the chamber of the brake valve, with the object of increasing the volume of that chamber. Air passes through the chamber when going either into or out of the brake-valve reservoir.

Three-Way Cock.—The first style of valve (used with the non-automatic or straight-air brake as early as 1868) controlled the passage of the air from the main reservoir to the train pipe and brake cylinders to apply the brake, and held the air in the brake cylinders and train pipe to keep the brake applied; also, it allowed the air to pass out to the atmosphere to release the brake. It was a three-way cock, as shown in Fig. 1, having three ports in the plug that could connect with the passages in the body of the cock and control the passage of the air. The pipe on the right was connected to the main reservoir, that on the left to the train pipe, while the middle one was the exhaust, leading to the atmosphere. Some three-way cocks are still in service, but

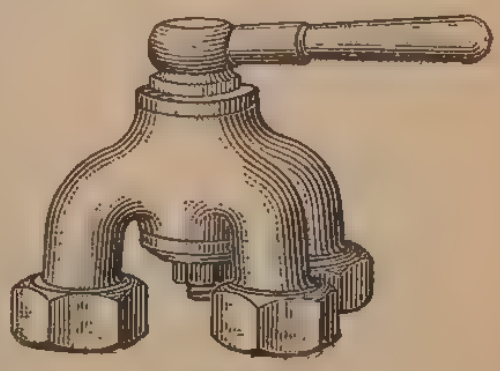

FIG. 1

their use is not considered a sign of progress in the air-brake field.

B-11 Brake Valve.—Next in order of invention was the B-11 engineer's brake valve in 1876, shown in Fig. 2; it was the first to have a rotary valve. In this an attempt was made to have the valve automatic in closing the discharge of air from the brake pipe. The handle was connected to a quick-thread screw in the top, which, when turned to the right, would

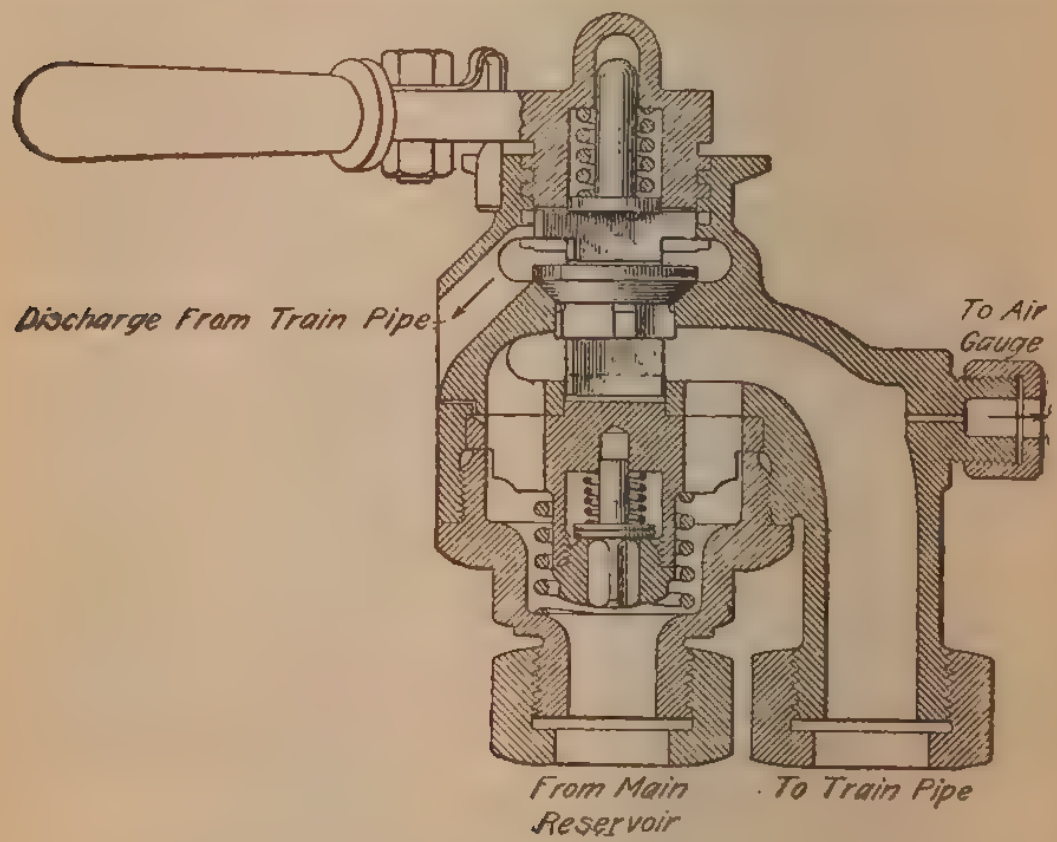

FIG. 2

reduce the tension of the spring shown in the handle and allow the brake-pipe discharge valve to be raised off its seat by brake-pipe pressure; then brake-pipe air would flow out to the atmosphere until it was reduced so that the spring could close the discharge valve and stop the flow of air. The rotary valve had ports straight through it to feed air direct from the main reservoir to the brake pipe with rotary valve in full-release position. Cavities in the face of the rotary valve connected the brake pipe direct to the atmosphere in

emergency position. There was an excess-pressure valve in the rotary valve which, in running position, would retain an excess of pressure in the main reservoir over that in the brake pipe. The higher main-reservoir pressure was found necessary to release promptly all triple valves in a train equipped with the automatic brake.

B-12 Brake Valve.—The spring equalization against air pressure was not found satisfactory, so the next valve, known as the B-12 valve, had an equalizing piston with air pressure on both sides of it; this valve is shown in Fig. 3. The B-12 brake valve was invented in 1886. With this valve the first attempt was made to overcome the evil effects resulting from the engineer closing the exhaust port too suddenly, which on a long train generally caused several of the head brakes to release. This releasing of the brakes was due to the air (rushing through the brake pipe) not stopping as soon as the exhaust port was closed; consequently, the air banked up in the front end of the brake pipe and raised the pressure above that in the auxiliary reservoir, thus causing the brakes to release. The equalizing feature provides for a constant flow of air from the brake pipe until the pressure is uniform throughout the train. The valve is also provided with a direct-application port, which is used in cases of emergency only. The chamber above the equalizing piston has a small reservoir attached

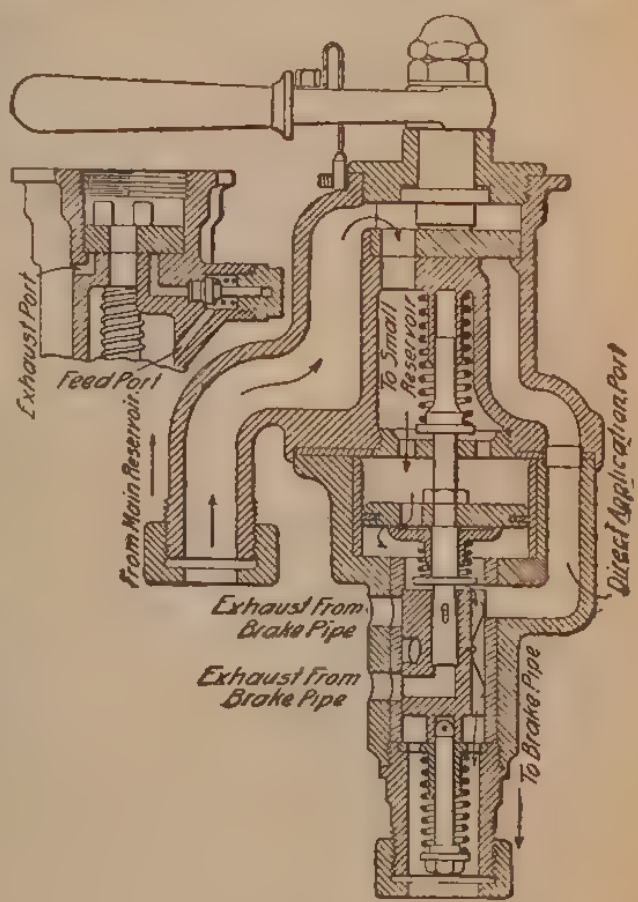

FIG. 3

to it to increase its volume; in full-release and running positions, main-reservoir air passes through this chamber and through the small holes in the equalizing piston on its way to the brake

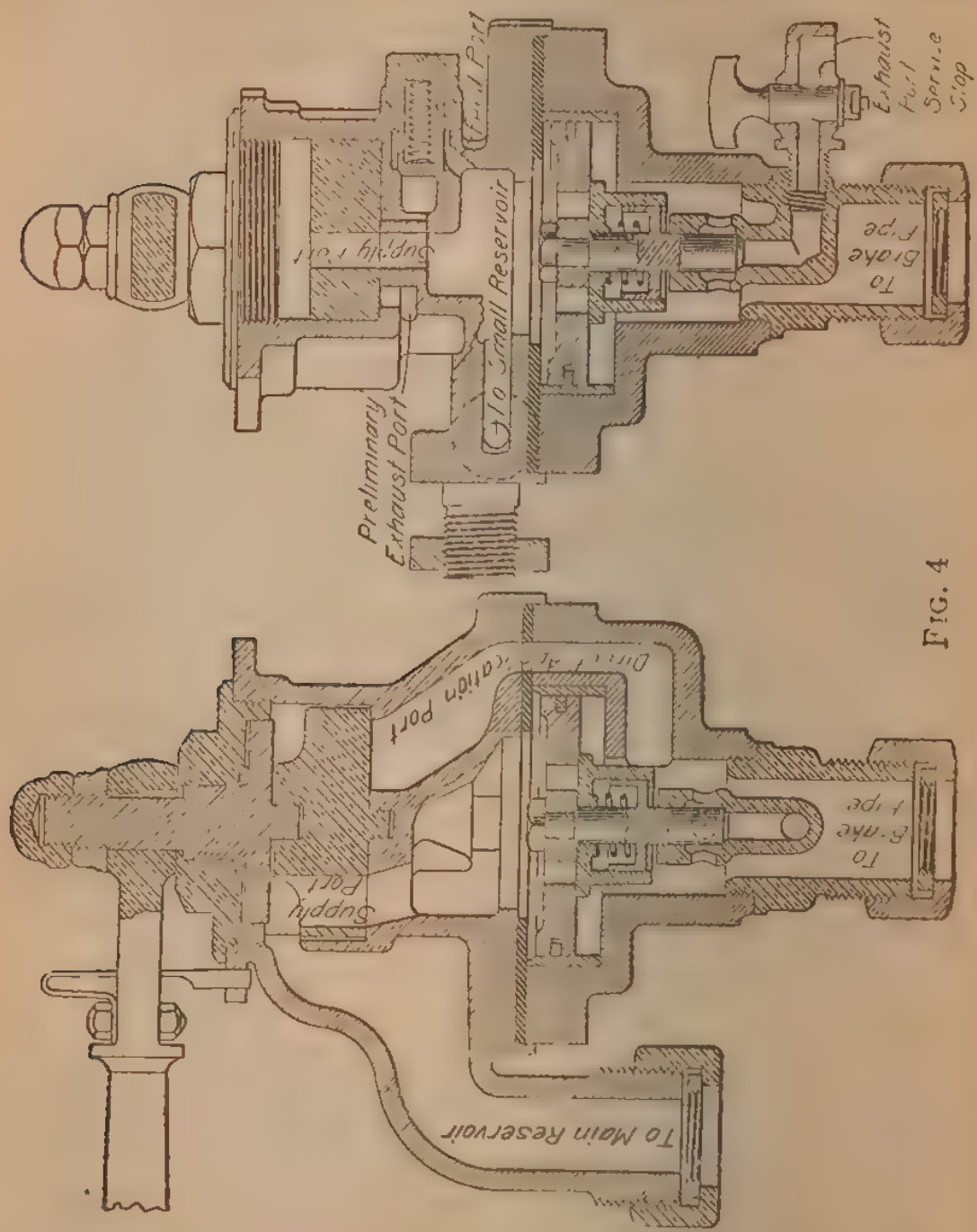

FIG. 4

pipe, as can be seen by the line of arrows. This valve has an excess-pressure valve in one side through which the air from the main reservoir has to pass when the rotary valve is in running position.

C-7 Brake Valve. The B-12 brake valve was not satisfactory in its operation, so another form, called C-7, was put in service in 1887, in which the main-reservoir air passed through the rotary valve and its seat into the chamber connected to the brake-valve reservoir, and thence through openings in the equalizing piston, as in the B-12. The slide valve and springs of the B-12 were not used in this one, which made it much less complicated and more certain in its action. The perforated equalizing piston gave trouble, as any dirt or foreign substance between the lower side of this piston and the spring washer would allow the air to pass either way through the piston, and the piston would not respond to moderate variations of pressure. To avoid the leakage from the brake-pipe exhaust elbow, it was provided with a stop-cock. This could be closed if the piston failed to seat the discharge valve; the cock was usually found closed, and the brake valve used in the emergency position to discharge air from the brake pipe. Cross-sectional views of this valve are shown in Fig. 4.

D-8 Brake Valve.—The D-8 brake valve, shown in Fig. 5 (*a*) and (*b*), was invented in 1889, and was intended to overcome the objectionable features in the valve preceding it. In this valve the main-reservoir air does not pass through the chamber above the equalizing piston on its way to the brake pipe, but has a direct connection with the brake pipe in full-release position through a port and cavities in the rotary valve and seat, and the direct-application-and-supply port that leads to the brake pipe. It will be noted that the direct-application-and-supply port in this valve is not a supply port in the valve preceding it, that port being used only in applying the brakes. The bottom of the equalizing-piston stem forms a seat over the brake-pipe exhaust port and has a small projection continuing on below the seat to regulate the rate of the brake-pipe discharge.

The top and bottom faces of the equalizing piston are directly connected in full-release and running positions by a small port known as the equalizing port. The valve also has an excess-pressure valve similar to the one in the C-7 valve. In running position, the air from the main reservoir passes this valve on its way to the brake pipe.

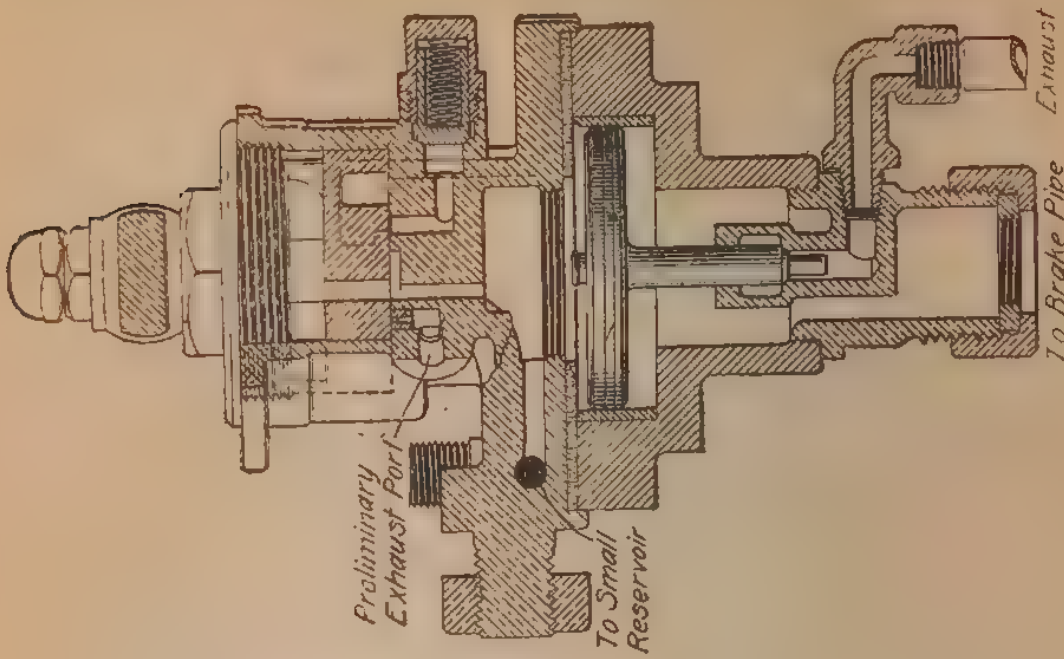
Preliminary Exhaust Port
To Small Reservoir
To Brake Pipe
Exhaust
(b)

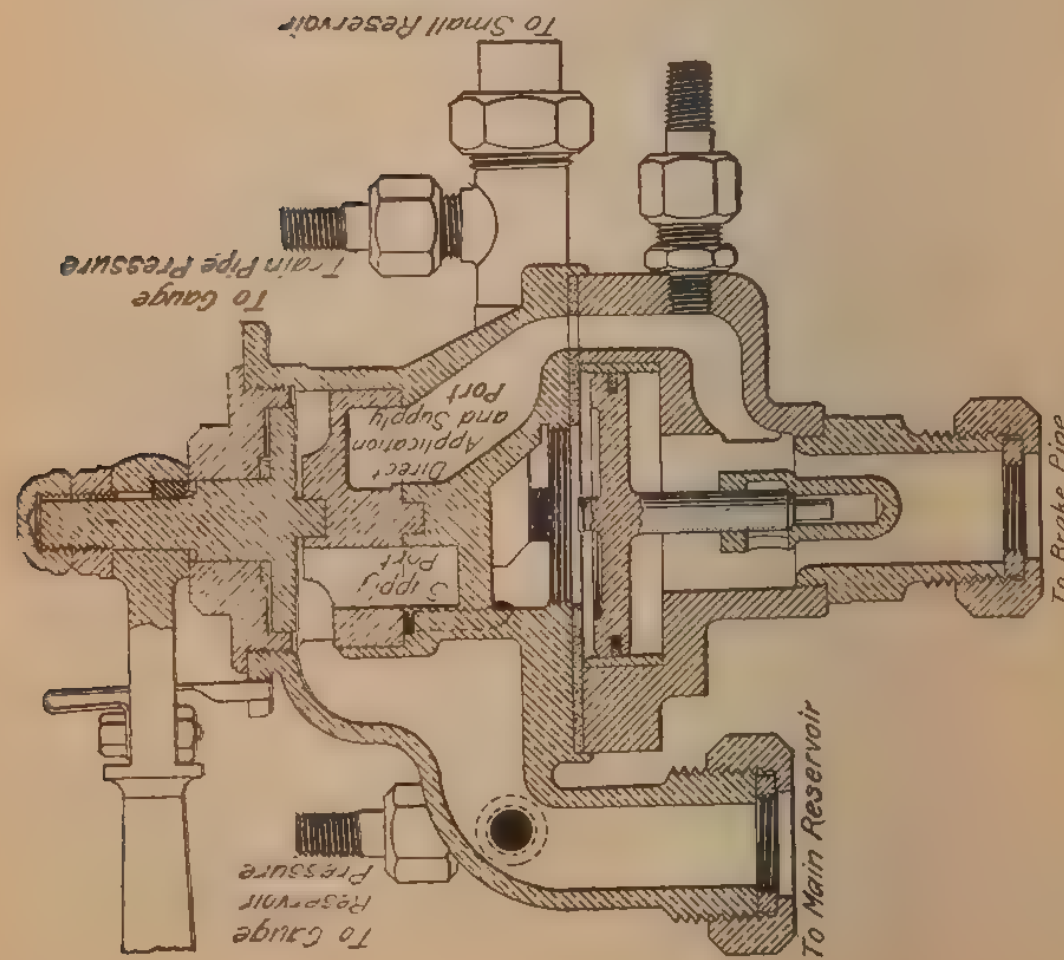
To Small Reservoir
To Gauge Train Pipe Pressure
Direct Application and Supply Port
Supply Port
To Brake Pipe
(a)
To Main Reservoir
To Gauge Reservoir Pressure

FIG. 5

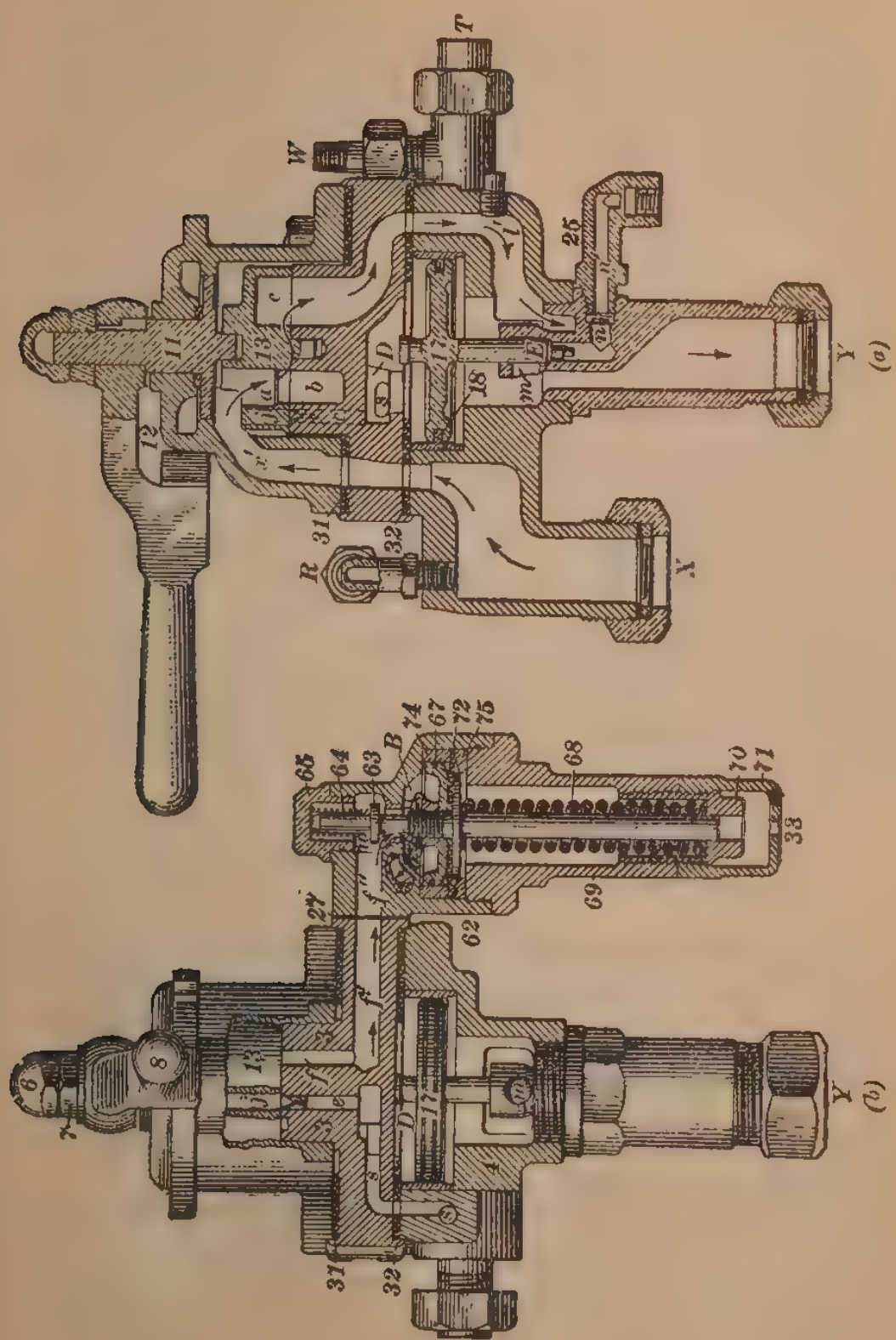

FIG. 6

There are certain objectionable features about this valve that were brought out in the process of evolution that the air brake underwent as the length of trains increased, and these have been changed in the later type of brake valve. The excess-pressure valve has given way to the feed-valve or brake-pipe governor. The feed-ports are increased in size. The arrangements of the ports in the valve and seat are slightly altered. The projection of the equalizing discharge-valve stem below the brake-pipe exhaust-valve seat is made tapering instead of straight, as shown.

D-5, E-6, F-6 Brake Valve.—The D-8 brake valve was superseded by D-5, E-6, or F-6 brake valve (the 1892 model) the latter three terms denoting one and the same valve, the letter and number being changed as each new catalog was issued by the Westinghouse Air-Brake Company. It is shown in Fig. 6. In this brake valve the excess-pressure valve of the D-8 valve was replaced by the feed-valve attachment.

G-6 Brake Valve.—The F-6 brake valve was in turn superseded by the G-6 brake valve, which differs from it only in the type of feed-valve used, the G-6 brake valve being furnished with the slide-valve feed-valve.

G-6 ENGINEER'S BRAKE VALVE

PIECE AND REFERENCE NUMBERS

The G-6 brake valve, shown in Figs. 1 and 2, is regularly furnished with old standard A-1, AD, and AG engine brake equipments. Its weight, including the feed-valve, is 50 lb. Its piece number with brass handle and C-6 feed-valve, complete, is 19,427; with brass handle, complete, less feed-valve and feed-valve case gasket, is 2,169; with malleable-iron handle and C-6 feed-valve, complete, is 20,231; with malleable-iron handle, complete, less feed-valve, 22,093; with brass handle and B-3 feed-valve, complete, 2,168; with malleable-iron handle and B-3 feed-valve complete, 22,094; with brass handle and feed-valve pipe connection, complete, 2,585; with malleable-iron handle and feed-valve pipe connection, complete, 22,096. The piece

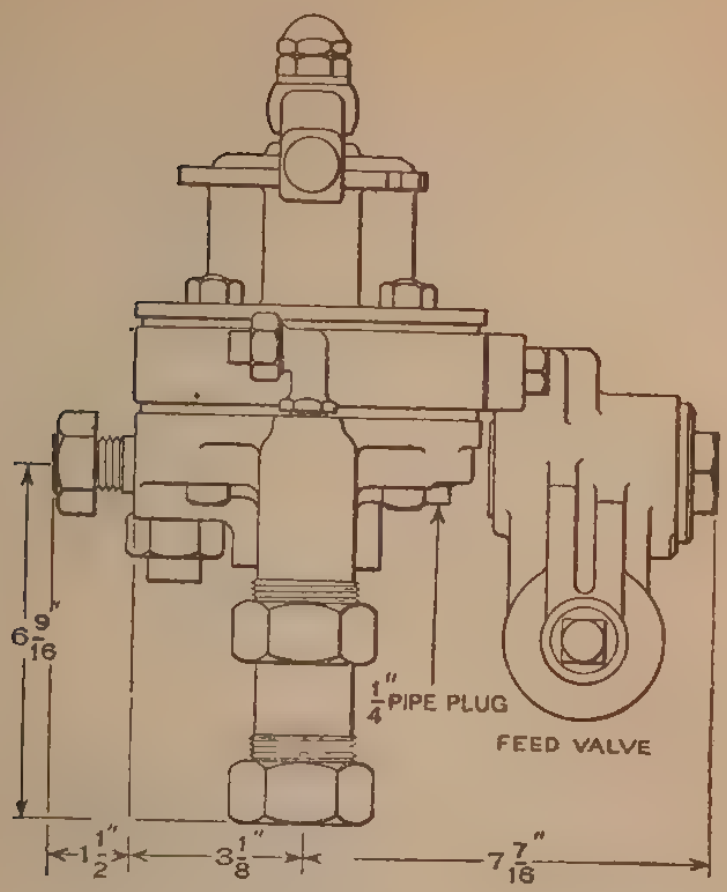

FIG. 1

and reference numbers of the various parts are given in the accompanying list:

Pc. No.	*Ref. No.*	*Name of Part*
12,670	2	Body, includes 34.
2,170	3	Rotary-valve seat, complete.
2,489	4	Bottom case, complete, includes 25 and 28.
1,990	5	Bottom cap.
1,991	6	Handle locknut.
1,992	7	Handle nut.
1,993	8	Brass handle, complete, includes 9, 10, and 11.
18,713	8	Malleable-iron handle, complete, includes 9, 10. and 11.
1,996	9	Latch.
1,367	10	Latch spring.
1,368	11	Latch screw.
1,997	12	Rotary-valve key.
1,998	13	Key washer.
1,999	14	Rotary valve.

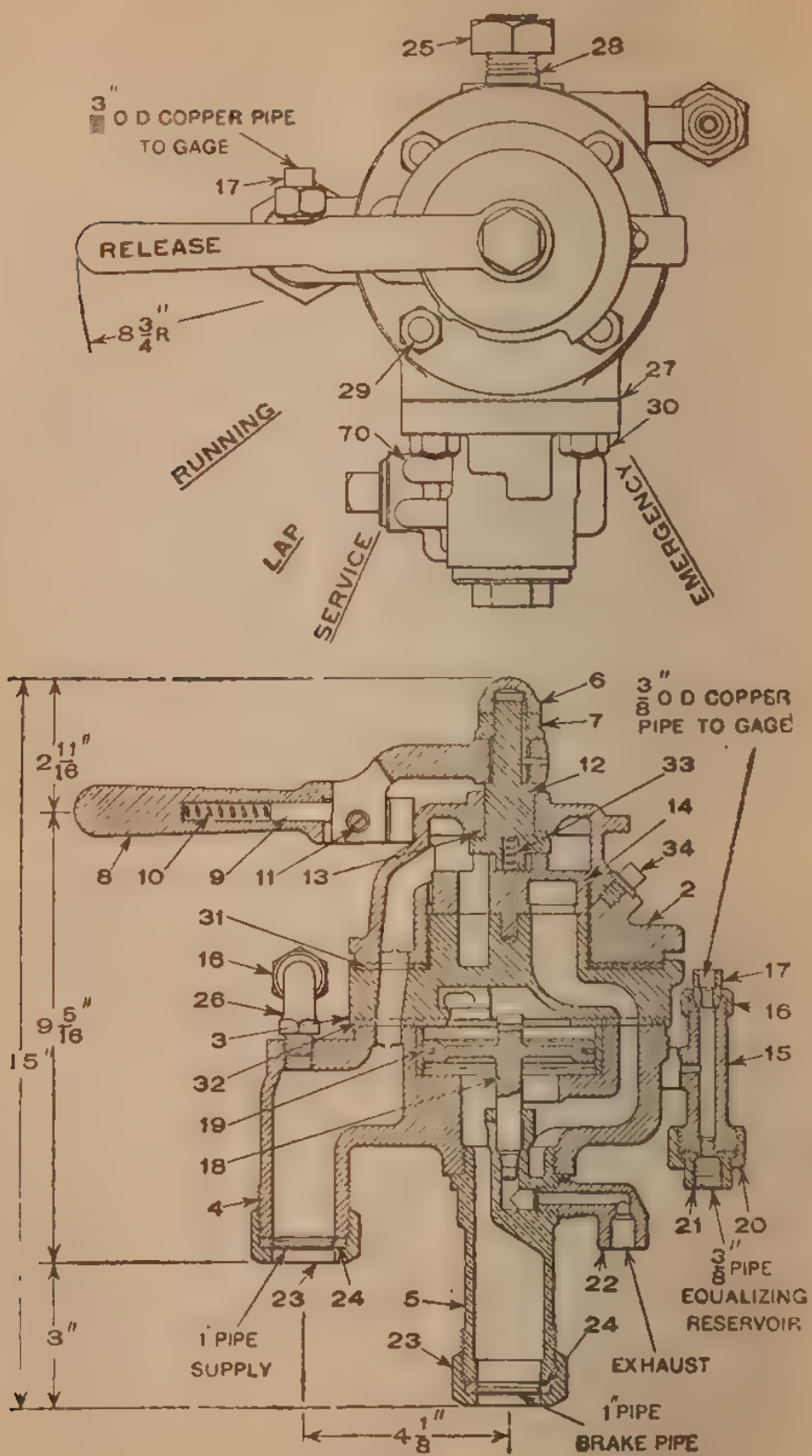
25
28
3/8" O D COPPER PIPE TO GAGE
17
RELEASE
8 3/4" R
29
27
30
70
RUNNING
LAP
SERVICE
EMERGENCY
6
7
3/8" O D COPPER PIPE TO GAGE
2 11/16"
12
33
14
34
2
8
10
9
11
13
31
16
26
3
32
19
18
4
17
16
15
9 5/16"
15"
21
20
3/8" PIPE EQUALIZING RESERVOIR
22
23
24
5
3"
1" PIPE SUPPLY
23
24
EXHAUST
1" PIPE BRAKE PIPE
4 1/8"

FIG. 2

Pc. No.	Ref. No.	Name of Part
6,672	15	Gauge and equalizing reservoir **L**.
2,001	16	Gauge and governor union nut.
16,286	17	Gauge and governor union swivel.
2,172	18	Equalizing piston, includes 19.
10,032	19	Piston ring.
35,299	20	$\frac{3}{8}$-in. union nut.
2,005	21	$\frac{3}{8}$-in. union swivel.
15,284	22	Exhaust fitting.
2,007	23	1-in. union nut.
2,008	24	1-in. union swivel.
2,010	25	Holding nut.
2,011	26	Gauge-pipe **L**.
2,012	27	Feed-valve gasket.
2,009	28	Holding stud.
11,014	29	$\frac{1}{2}$-in. bolt and nut.
35,385	30	Stud and nut.
2,015	31	Upper gasket
2,016	32	Lower gasket.
13,109	33	Rotary-valve spring.
6,753	34	Oil plug.
18,480		C-6 single pressure feed-valve.
1,635		$\frac{1}{4}$-in. pipe plug.

Spring Identification of G-6 Brake Valve

Pc. No.	Out. Dia. *A*, In.	Dia. Wire *B*, In.	Free Height *C*, In.	No. Coils	Material	Name of Spring
1,367	$\frac{11}{32}$	.057	$1\frac{3}{4}$	16	Steel	Latch
13,109	$\frac{11}{32}$	.057	$1\frac{1}{16}$	$9\frac{1}{2}$	Steel	Rotary valve

OPERATION OF G-6 AUTOMATIC BRAKE VALVE

When the G-6 engineer's brake valve, Figs. 1 and 2, is in release position, main-reservoir air flows into the brake pipe.

As the brake-pipe pressure increases, the triple pistons are forced to release position and the auxiliaries are charged. The air also passes down through the rotary valve into the chamber above the equalizing piston, and out to the equalizing reservoir through the **T** fitting *15*.

A small port *r*, called the engineer's *warning port*, is drilled through the rotary valve in such a position that in full-release

position it is directly over the exhaust port in the rotary seat and allows main-reservoir air to blow through into the exhaust port.

Running Position.—In running position, air from the main reservoir passes through the feed-valve attachment into the brake pipe. The air continues to flow thus until the brake-pipe pressure reaches 70 lb., when the feed-valve attachment closes. As air passes through the feed-valve attachment, some of it passes up into a cavity in the rotary valve and down through a port into chamber *D*, the chamber above the equalizing piston *18*. Connection is thus maintained between the brake pipe and chamber *D*, that is, between both sides of the equalizing piston *17*. The black gauge hand is piped to the equalizing-reservoir connection at union swivel *17*, and, as in running position there is a port connection between the brake pipe and chamber *D* through the cavity in the rotary and a port, the black hand must, in this position, indicate both chamber-*D* and brake-pipe pressures. The same movement that changes the rotary from full-release to running position closes the warning port.

Lap Position.—In lap position, the rotary has been moved around so as to close all connections.

Service Position.—In service position, the rotary has been moved so that a groove in the face of the rotary valve connects the preliminary-exhaust port in the rotary seat with a port, which leads into the direct-application-and-exhaust port. A direct connection is thus established between chamber *D* and the atmosphere, and air from chamber *D* can pass to the atmosphere. The reduction of the pressure in chamber *D* causes the equalizing piston to rise and open the brake-pipe exhaust valve, thus producing a brake-pipe reduction.

Emergency Position.—In emergency position, the rotary has been moved around so that its cavity connects a large port leading to the brake pipe with the exhaust port leading to the atmosphere. The opening of these large ports causes a sudden brake-pipe reduction, which gives an emergency application of the brakes. Also, a groove in the rotary valve connects a port from chamber *D* with a groove leading to the atmosphere, thus exhausting the air from chamber *D* and allowing the black hand of the gauge to drop to zero.

H-5 AUTOMATIC BRAKE VALVE

PIECE AND REFERENCE NUMBERS

The H-5 automatic brake valve, shown in Figs. 1 and 2, is standard for use with the No. 5-ET locomotive brake equipment; its weight is 50 lb. The piece number of the H-5 automatic brake valve, complete, is 11,596. The piece and reference number of the various parts are given in the accompanying list.

Pc. No.	*Ref. No.*	*Name of Part*
9,733	2	Bottom case, bushed, includes 35.
10,406	3	Rotary-valve seat, complete.
12,277	4	Top case, includes 29.
17,310	5	Pipe bracket, includes 25, 26, and 31.
33,362	6	Rotary valve.
9,759	7	Rotary-valve key.
1,998	8	Key washer.
1,993	9	Handle, includes 10, 11, and 12.
1,367	10	Latch spring.
1,996	11	Latch.
1,368	12	Latch screw.
1,992	13	Handle nut.
1,991	14	Handle locknut.
11,045	15	Equalizing piston, includes 16.
10,032	16	Equalizing-piston-packing ring.
9,758	17	Upper gasket.
9,757	18	Middle gasket.
15,534	19	Lower gasket.
2,001	20	¼-in. union nut.
6,672	21	Brake valve T.
16,286	22	¼-in. union swivel.
35,299	23	⅜-in. union nut.
2,005	24	⅜-in. union swivel.
2,009	25	Holding stud.
2,010	26	Holding nut.
11,016	27	Bolt and nut.
4,110	28	Capscrew.
6,753	29	Oil plug.
13,109	30	Rotary-valve spring.
2,007	31	1-in. union nut.
2,008	32	1-in. union swivel.
1,636		1-in. pipe plug.
1,734		⅜-in. pipe plug.
14,464	35	Exhaust fitting.

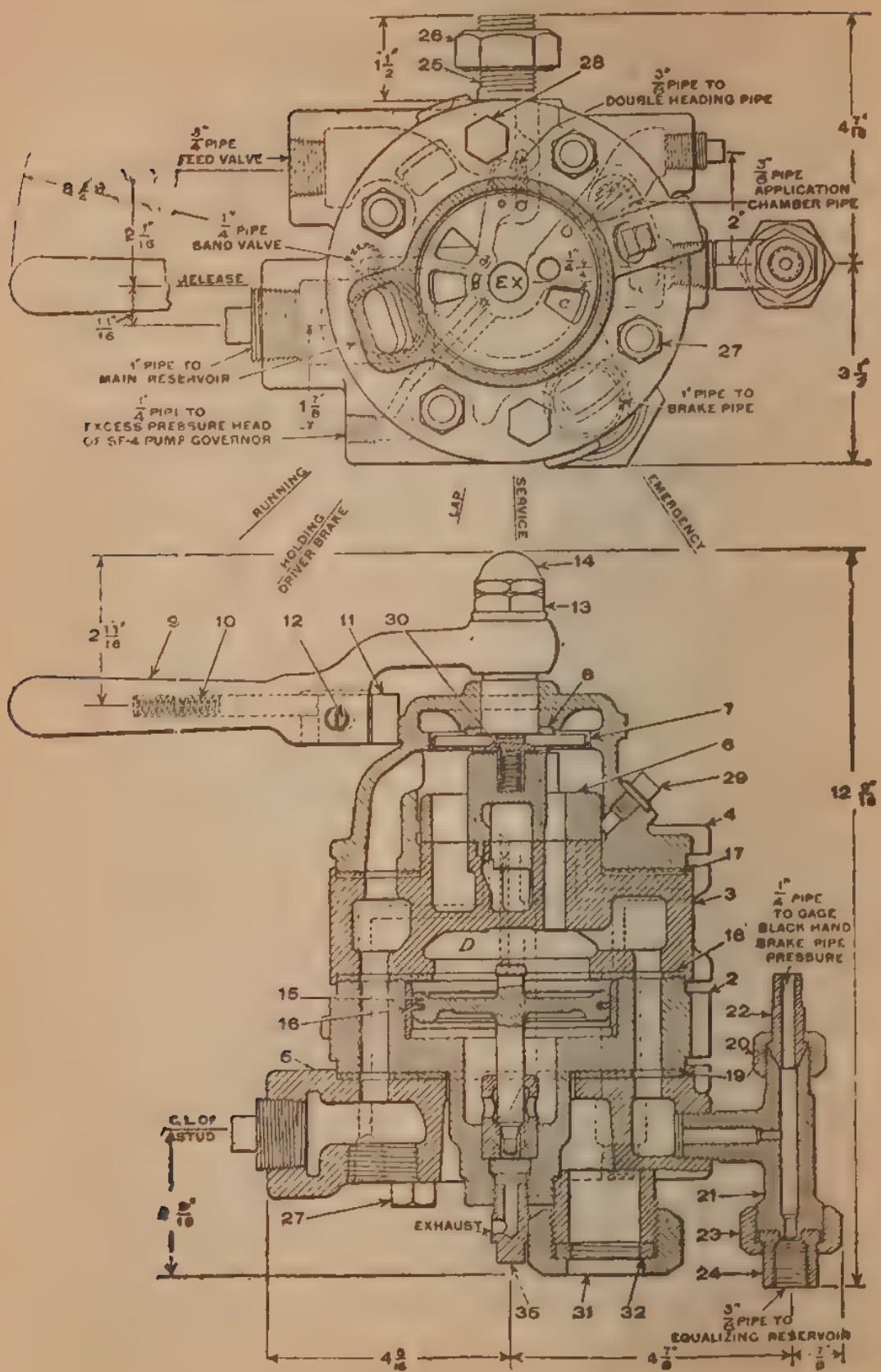
3/4" PIPE FEED VALVE
1/4" PIPE BAND VALVE
RELEASE
1" PIPE TO MAIN RESERVOIR
1/4" PIPE TO EXCESS PRESSURE HEAD OF SF-4 PUMP GOVERNOR
3/8" PIPE TO DOUBLE HEADING PIPE
3/8" PIPE APPLICATION CHAMBER PIPE
1" PIPE TO BRAKE PIPE
EX
RUNNING
HOLDING DRIVER BRAKE
LAP
SERVICE
EMERGENCY
1/4" PIPE TO GAGE BLACK HAND BRAKE PIPE PRESSURE
EXHAUST
3/8" PIPE TO EQUALIZING RESERVOIR
C.L. OF STUD

FIG. 1

OPERATION OF THE H-5 AUTOMATIC BRAKE VALVE

This H-5 automatic brake valve, although modeled to a considerable extent upon the principles of previous valves, is necessarily different in detail, as it not only performs all the functions of the other types but also those absolutely necessary to obtain all the desirable operating features of the *distributing valve*, which is used in connection with this brake valve. The

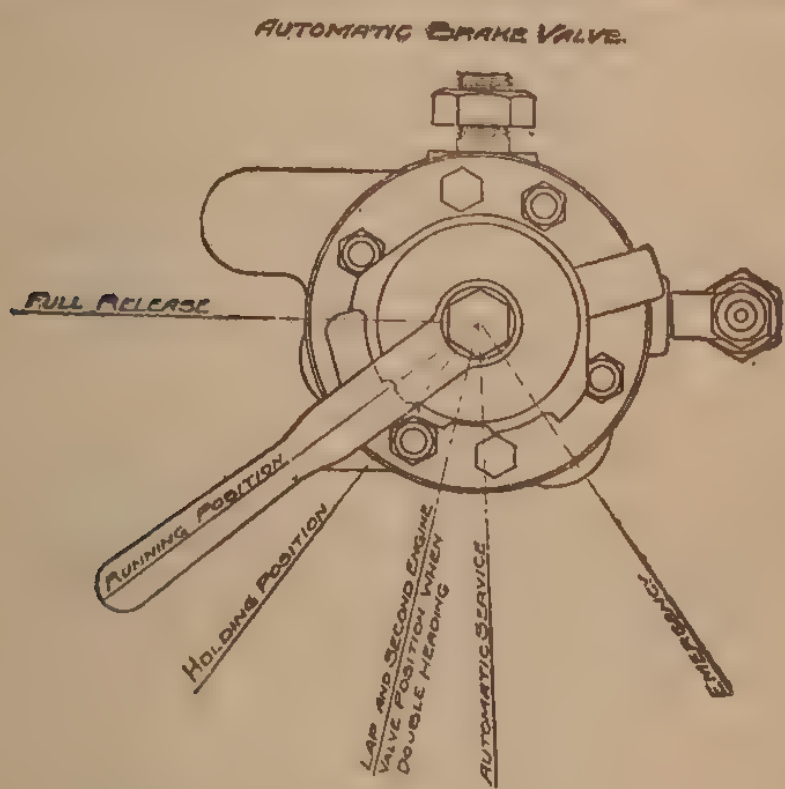

FIG. 2

positions of the brake-valve handle are shown in Fig. 2, from which it will be noted that there is an extra position, called *holding position*. In describing the operation of this brake valve, the positions are taken up in the order in which they are most generally used.

Running Position.—To release the engine and tender brakes, or when the brakes are not being used and the system is charged and ready for an application, the handle should be placed in the running position. In this position, cavity *f* in the rotary valve connects ports *b* and *d* in the valve seat, affording a large direct passage from the feed-valve to the brake pipe, so that the latter will charge up as rapidly as the feed-valve can

supply the air, but cannot attain a pressure above that for which the feed-valve is adjusted. Cavity *k* in the rotary valve connects ports *c* and *g* in the valve seat, so that chamber *D* and the equalizing reservoir charge uniformly with the brake pipe, keeping the pressures on the two sides of the equalizing piston equal. Port *s* in the rotary valve registers with port *p* in the valve seat, permitting main-reservoir pressure, which is present at all times above the rotary valve, to pass to the excess-pressure head of the pump governor. Port *h* in the rotary valve registers with port *l* in the seat, connecting the application-chamber pipe to the exhaust cavity *ex*.

Service Position.—The service position gives a gradual reduction of brake-pipe pressure to cause a service application. Port *h* in the rotary valve registers with port *e* in the valve seat, allowing air from chamber *D* and the equalizing reservoir to escape to the atmosphere through cavities *o* in the rotary valve and exhaust cavity *ex* in the valve seat. Port *e* is restricted so as to make the pressure in the equalizing reservoir and chamber *D* fall gradually. The fall of pressure in chamber *D* allows the brake-pipe pressure under the equalizing piston to raise it, and unseat the discharge valve, allowing brake-pipe air to flow to the atmosphere. When the pressure in chamber *D* is reduced the desired amount, the handle is moved to the lap position, thus stopping any further reduction in that chamber. Air will continue to discharge from the brake pipe until its pressure has fallen to an amount a trifle less than that retained in chamber *D*, permitting the pressure in this chamber to force the piston downwards and stop the discharge of brake-pipe air. It will be seen, therefore, that the amount of reduction in the equalizing reservoir determines that in the brake pipe, regardless of the length of the train.

Lap Position.—The lap position is used while holding the brakes applied after a service application until it is desired either to make a further brake-pipe reduction, or to release them; also to prevent loss of main-reservoir pressure or the release of the brake in the event of a burst hose, a break in two, or the opening of the conductor's valve. Lap position is also used on all engines in a train that are not controlling the train brakes, as, with the handle in this position, port *h*

in the rotary valve connects with port *u* in the seat. Therefore, when the double cut-out cock is turned to the position that cuts out the brake pipe, it makes a direct opening from port *i* in the distributing valve through the double-heading pipe to the atmosphere, and is the passage through which the air escapes from the application chamber when the automatic brakes are being released.

Release Position.—The purpose of release position is to provide a large and direct passage from the main reservoir to the brake pipe, to permit a rapid flow of air into the latter to insure a quick release and recharging of the train brakes, but without releasing the engine and tender brakes.

Air at main-reservoir pressure flows through port *a* in the rotary valve to port *b* in the valve seat and to the brake pipe. At the same time, port *j* in the rotary valve registers with the equalizing port *g* in the valve seat, permitting main-reservoir pressure to enter chamber *D* above the equalizing piston.

In this position, port *s* in the rotary valve registers with warning port *r* in the seat and allows a small quantity of air to escape into the exhaust cavity *ex*, which makes sufficient noise to attract the engineer's attention to the position in which the valve handle is standing. If the handle is allowed to remain in this position, the brake system will be charged to main-reservoir pressure. To avoid this, the handle must be moved to running or holding positions. The small groove in the face of the rotary valve that connects with port *s*, extends to port *p*, in the valve seat, allowing main-reservoir pressure to flow to the excess-pressure head of the pump governor.

Holding Position.—The holding position is so named because the locomotive brakes are held applied, as they are in release position, while the train brakes feed up to the feed-valve pressure. All ports register as in running position, except port *l*, which is closed. Therefore, the only difference between running and holding positions is that in the former the application chamber is open to the atmosphere, while in the latter it is not.

Emergency Position.—The emergency position is used when the most prompt and heavy application of the brakes is desired. Port *x* in the rotary valve registers with port *c* in

the valve seat, making a large and direct communication between the brake pipe and atmosphere through cavity *o* in the rotary valve and the exhaust cavity in the valve seat. This direct passage causes a sudden and heavy discharge of brake-pipe pressure, causing the triple valves and distributing valve to go to the emergency position and apply the brake in the shortest possible time. In this position the groove *n* in the rotary valve connects ports *g* and *l* in the valve seat, thereby allowing equalizing reservoir air to flow into the application chamber.

The oil plug *29* is placed in the top case *4* at a point to fix the level of the oil surrounding the rotary valve. A leather washer *8* prevents air in the rotary-valve chamber from leaking past the rotary-valve key to the atmosphere. A spring *30* keeps the rotary-valve key firmly pressed against the washer *8* when no main-reservoir pressure is present. The handle *9* contains a latch *11* that fits into notches in the top case; these notches are so located as to indicate the different positions of the brake-valve handle. The spring *10* back of the latch forces the latter against the body with sufficient pressure to distinctly indicate when the handle arrives at each position.

To remove the brake valve, take off nuts *27*, thus allowing it to come away without disturbing the pipe bracket or breaking any pipe joints. To take the valve proper apart, remove capscrews *28*.

The brake valve should be located so that the engineer can operate it from his usual position, while looking forwards or backwards out of the side cab window, and in such a manner that the handle will not meet with any obstruction throughout its entire movement.

H–6 AUTOMATIC BRAKE VALVE

PIECE AND REFERENCE NUMBERS

The H-6 automatic brake valve, shown in Fig. 1, is a part of, and is regularly supplied with, the No. 6 ET locomotive brake equipment; its weight is 50 lb. The piece number of H-6 brake valve, with brass handle and pipe bracket, complete,

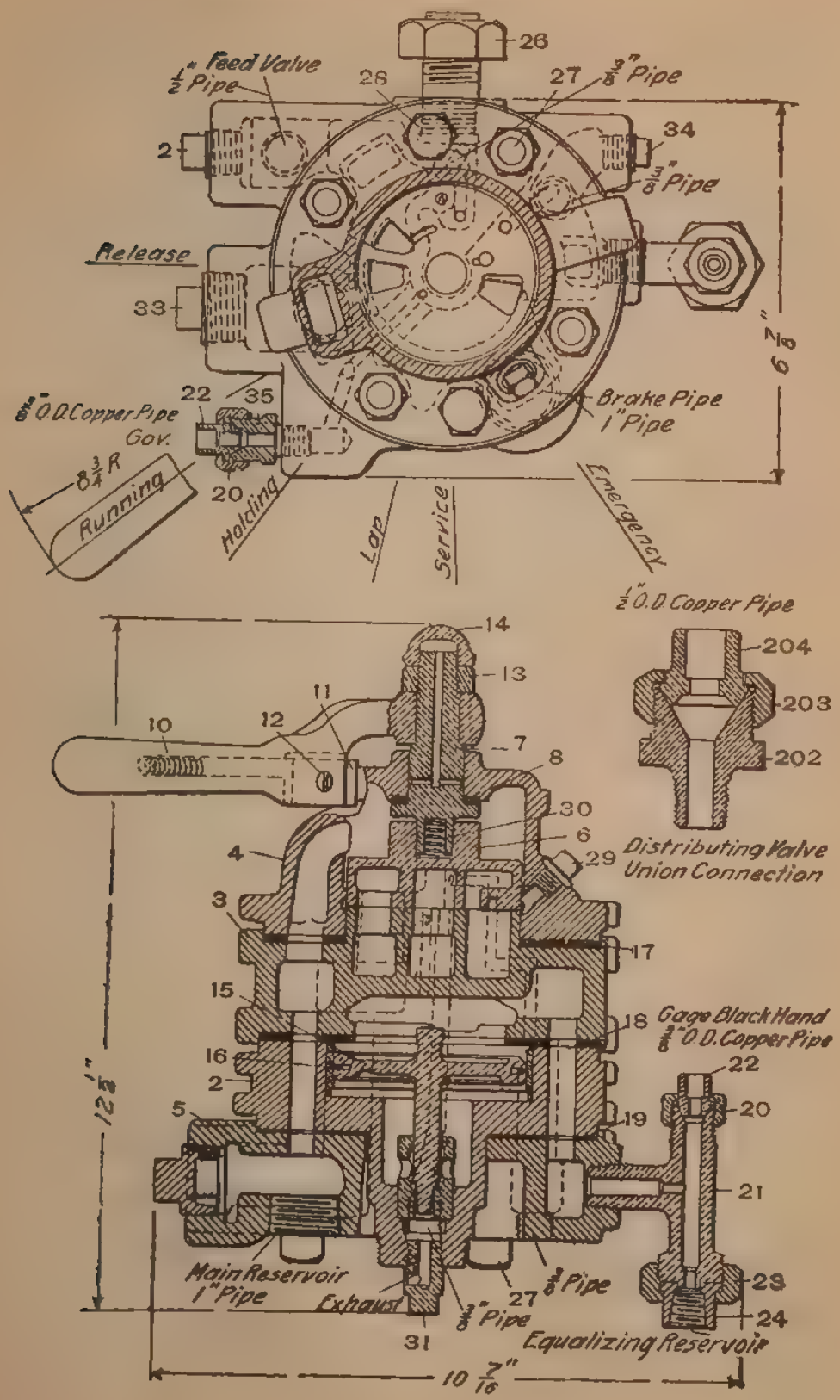
26
Feed Valve
1/2" Pipe
28
27
3/8" Pipe
34
2
3/8" Pipe
Release
33
6 7/8"
22
35
3/8" O.D. Copper Pipe
Gov.
Brake Pipe
1" Pipe
8 3/4" R
Running
20
Holding
Lap
Service
Emergency
1/2" O.D. Copper Pipe
14
13
204
203
11
10
12
7
8
202
30
6
Distributing Valve
Union Connection
4
29
3
17
15
18
Gage Black Hand
3/8" O.D. Copper Pipe
16
22
2
12 1/8"
5
19
20
21
Main Reservoir
1" Pipe
Exhaust
27
3/8" Pipe
3/8" Pipe
23
24
31
Equalizing Reservoir
10 7/16"

FIG. 1

is 18,462; with brass handle, complete, without pipe bracket, 22,091; with malleable-iron handle and pipe bracket, complete, 19,288; with malleable-iron handle, complete, without pipe bracket, 22,092. The piece and reference numbers of the

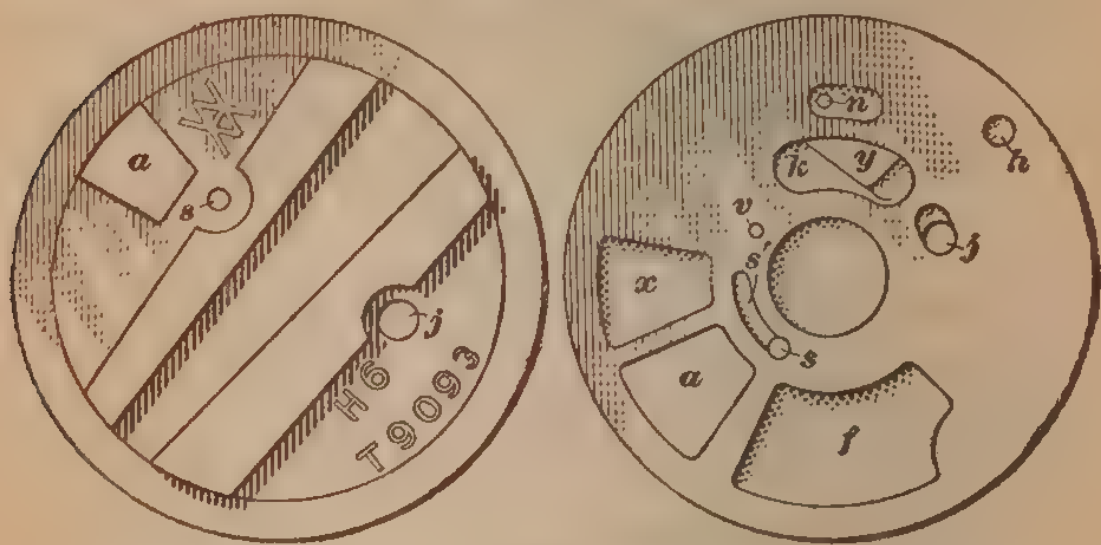

FIG. 2

various parts are given in the accompanying list. In Fig. 2 are shown enlarged views of the face and the top of the rotary valve.

Pc. No.	*Ref. No.*	*Name of Part*
9,733	2	Bottom case, bushed, includes 31.
18,434	3	Rotary-valve seat, complete.
12,277	4	Top case, includes 29.
18,432	5	Pipe bracket includes 25, 26, 32, 33, and 34.
18,413	6	Rotary valve.
9,759	7	Rotary-valve key.
1,998	8	Key washer.
1,993	9	Brass handle, complete, includes 10, 11, and 12.
18,713	9	Malleable-iron handle, complete, includes 10, 11, and 12.
1,367	10	Latch spring.
1,996	11	Latch.
1,368	12	Latch screw.
1,992	13	Handle nut.
1,991	14	Handle locknut.
11,045	15	Equalizing piston, includes 16.
10,032	16	Piston ring.
9,758	17	Upper gasket.
9,757	18	Middle gasket.

Pc. No.	Ref. No.	Name of Part
15,534	19	Lower gasket.
20,485		Governor-union connection, complete, includes 20, 22, and 35.
2,001	20	Gauge and governor-union nut.
6,672	21	Gauge and equalizing reservoir T.
16,286	22	Gauge and governor-union swivel.
35,299	23	⅜-in. union nut.
2,005	24	⅜-in. union swivel.
2,009	25	Holding stud.
2,010	26	Holding nut.
37,256	27	Bolt and nut.
4,110	28	Capscrew.
6,753	29	Oil plug.
13,109	30	Rotary-valve spring.
14,464	31	Exhaust fitting.
1,004	32	½-in. pipe plug.
1,636	33	1-in. pipe plug.
1,734	34	⅜-in. pipe plug.
20,470	35	Governor-union stud.
18,365		Distributing-valve union connection, complete, includes 202, 203, and 204.
18,364	202	Union stud.
15,292	203	Union nut.
18,363	204	Union swivel.

Spring Identification of H-6 Brake Valve

Pc. No.	Out. Dia. *A*, In.	Dia. Wire *B*, In.	Free Height *C*, In.	No. Coils	Material	Name of Spring
1,867	11/32	.057	1¾	16	Steel	Latch
13,109	11/32	.057	1 1/16	9½	Steel	Rotary valve

OPERATION OF H-6 AUTOMATIC BRAKE VALVE

Charging and Release Position.—The purpose of the charging and release position is to provide a large, direct passage from the main reservoir to the brake pipe, to permit a rapid flow of main-reservoir air into the brake pipe to charge the train-brake system; to quickly release and recharge the brakes; to hold the locomotive brakes, if they are applied. In release position, air at main-reservoir pressure flows through port *a* in

the rotary valve and port *b* in the valve seat into the brake pipe. Port *j* in the rotary valve registers with equalizing port *g* in the valve seat, permitting main-reservoir air to blow into chamber *D* above the equalizing piston.

If the handle is allowed to remain in this position, the brake system will be charged to main-reservoir pressure. To avoid this, the handle must be moved to running or holding position. A small port discharges feed-valve-pipe air to the atmosphere in release position, to prevent the engineer from forgetting that the handle is in release position. Cavity *f* in the rotary valve connects port *d* with warning port *r* in the seat and allows a small quantity of air to escape into the exhaust cavity *ex* which makes sufficient noise to attract the engineer's attention to the position in which the valve handle is standing. The small groove in the face of the rotary valve that connects with port *s*, extends to port *p* in the valve seat, allowing main-reservoir pressure to flow to the excess-pressure head of the pump governor.

Running Position.—The running position is the proper position of the handle when the brakes are charged and ready for use, when the brakes are not being operated, and when the locomotive brakes are to be released. In this position, cavity *f* in the rotary valve connects ports *b* and *d* in the valve seat, affording a large direct passage from the feed-valve pipe to the brake pipe, so that the latter will charge up as rapidly as the feed-valve can supply the air, but cannot attain a pressure above that for which the feed-valve is adjusted. Cavity *k* in the rotary valve connects ports *c* and *g* in the valve seat, so that chamber *D* and the equalizing reservoir charge uniformly with the brake pipe, keeping the pressure on the two sides of the equalizing piston equal. Port *s* in the rotary valve registers with port *p* in the valve seat, permitting main-reservoir pressure, which is present at all times above the rotary valve, to pass to the excess-pressure head of the pump governor. Port *h* in the rotary valve registers with port *l* in the seat, connecting the distributing-valve release pipe through the exhaust cavity *ex* with the atmosphere.

Service Position.—The service position gives a gradual reduction of brake-pipe pressure to cause a service application.

Port *h* in the rotary valve registers with port *e* in the valve seat, allowing air from chamber *D* and the equalizing reservoir to escape to the atmosphere through cavities *o*, in the rotary valve, and *ex*, in the valve seat. Port *e* is restricted so as to make the pressure in the equalizing reservoir and chamber *D* fall gradually. As all other ports are closed, the fall of pressure in chamber *D* allows the brake-pipe pressure under the equalizing piston to raise it, and unseat its valve, allowing brake-pipe air to flow to the atmosphere gradually through the opening marked exhaust, Fig. 1. When the pressure in chamber *D* is reduced the desired amount, the handle is moved to lap position, thus stopping any further reduction in that chamber. Air will continue to discharge from the brake pipe until its pressure has fallen to an amount a trifle less than that retained in chamber *D*, permitting the pressure in this chamber to force the piston downwards gradually and stop the discharge of brake-pipe air. It will be seen, therefore, that the amount of reduction in the equalizing reservoir determines that in the brake pipe, regardless of the length of the train.

Lap Position.—The lap position is used while holding the brakes applied after a service application until it is desired either to make a further brake-pipe reduction or to release them; and to prevent loss of main-reservoir pressure in the event of a burst hose, a break-in-two, or the opening of the conductor's valve. In this position all ports are closed.

Release Position.—The release position, which is used for releasing the train brakes after an application, without releasing the locomotive brakes, has already been described. The air flowing from the main-reservoir-pipe connection through port *a*, in the rotary valve, and port *b*, in the valve seat, to the brake pipe, raises the pressure in the latter, thereby causing the triple valves and equalizing portion of the distributing valve to go to release position, which releases the train brakes and recharges the auxiliary reservoirs and the pressure chamber in the distributing valve. When the brake-pipe pressure has been increased sufficiently to cause this, the handle of the brake valve should be moved to either running or holding position; the former when it is desired to release locomotive brakes, and the latter when they are to be still held applied.

Holding Position.—In holding position the locomotive brakes are held applied while the train brakes recharge to feed-valve pressure. All ports register as in running position, except port *l*, which is closed. The only difference between running and holding positions is that in the former the locomotive brakes are released, while in the latter they are held applied.

Emergency Position.—The emergency position is used when the most prompt and heavy application of the brakes is required. Port *x* in the rotary valve, and port *c* in the seat, make a large direct opening between the brake pipe and atmosphere. This makes a sudden heavy brake-pipe reduction, causing the triple valves and distributing valve to go to the emergency position. Main-reservoir air flows to the application cylinder through port *j*, a groove in the seat, cavity *k*, port *n* in the valve, and port *u* in the seat, thus maintaining application-cylinder pressure. Equalizing-reservoir air flows through port *v* in rotary valve, port *g* in seat, and the exhaust port *o*, reducing equalizing-reservoir pressure to zero during an emergency application.

SF-1 INDEPENDENT BRAKE VALVE

PIECE AND REFERENCE NUMBERS

The SF-1 independent brake valve, Fig. 1, is a part of, and is regularly supplied with, the No. 5 ET locomotive brake equipment; its weight is 14 lb. The SF independent brake valve, formerly supplied with the No. 5 ET equipment, differs from the SF-1 valve in the items, Ref. Nos. 9, 10, 12, 27, and 28, in the accompanying list. The SF valves now in service may be readily changed to incorporate the new type of spring and housing by drilling a $\frac{7}{32}$-in. hole for the stop-pin and substituting Ref. Nos. 9, 10, 12, 27, and 28 in place of similar details removed. It is impossible to apply either the spring or any detail of the new construction to old SF valves unless the complete set of details comprised in the improved arrangement is first changed and the $\frac{7}{32}$-in. hole is drilled according to directions, which will be furnished by the Westinghouse Air-Brake Company on request. In ordering repair parts for this valve, note carefully whether they are desired for the SF

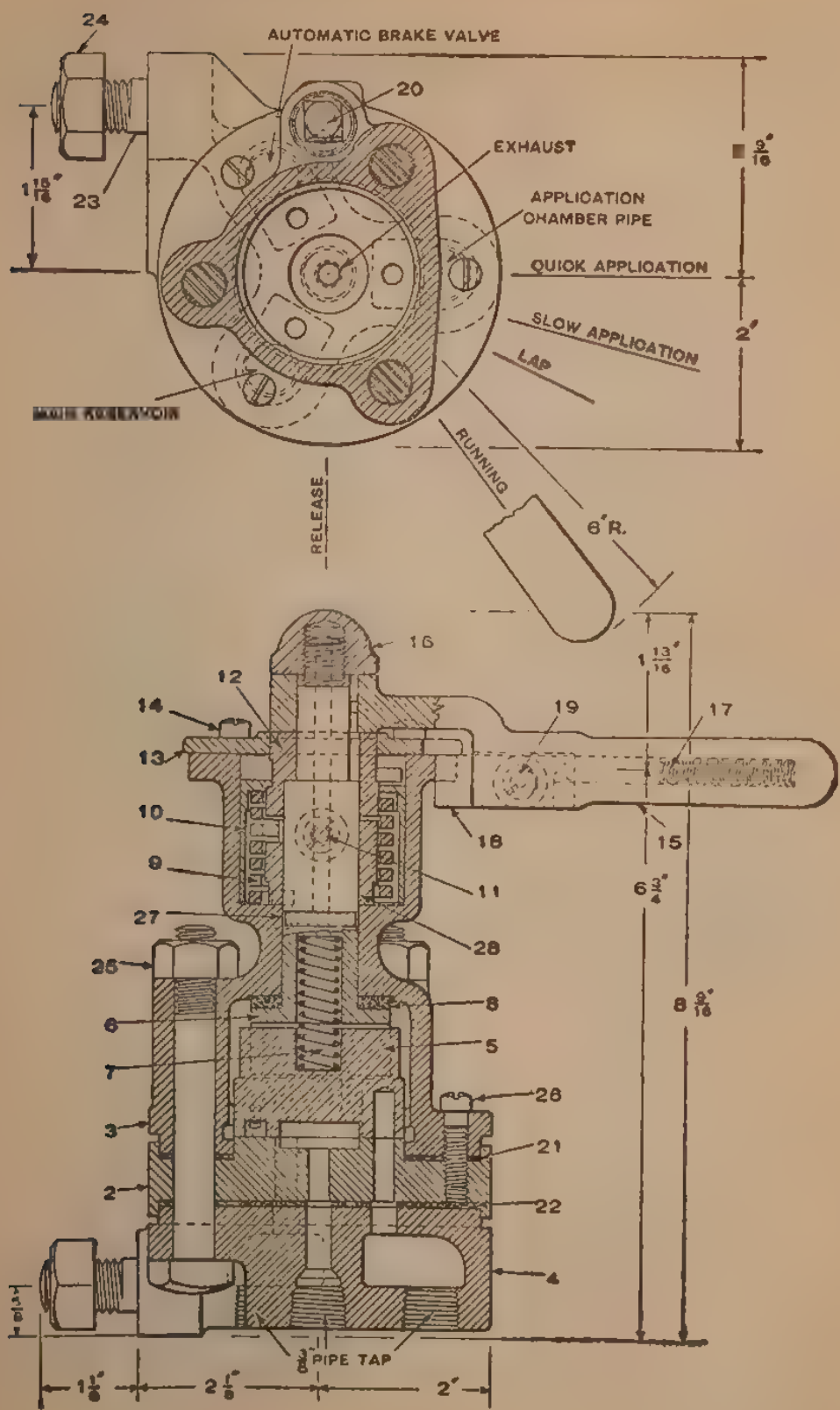
AUTOMATIC BRAKE VALVE
EXHAUST
APPLICATION CHAMBER PIPE
QUICK APPLICATION
SLOW APPLICATION
LAP
RUNNING
RELEASE
6" R.
MAIN RESERVOIR
3/8" PIPE TAP

FIG. 1

or SF-1 valve. The piece number of SF-1 independent brake valve with brass handle and pipe bracket, complete, is 21,736; with malleable-iron handle and pipe bracket, complete, 21,737. The piece and reference numbers of the various parts are given in the accompanying list.

Pc. No.	*Ref. No.*	*Name of Part*
10,214	2	Rotary-valve seat.
21,738	3	Body, includes 11, 20, and 27.
12,306	4	Pipe bracket, includes 23 and 24.
11,934	5	Rotary valve.
14,299	6	Rotary-valve key.
6,763	7	Rotary-valve spring.
6,760	8	Key washer.
17,445	9	Return spring.
19,072	10	Return-spring casing.
11,943	11	Screw for return-spring casing.
19,071	12	Upper clutch.
11,925	13	Cover.
12,304	14	Cover screw.
11,966	15	Brass handle, includes 17, 18, and 19.
18,748	15	Malleable-iron handle, includes 17, 18, 19.
9,926	16	Handle nut.
9,810	17	Latch spring.
11,932	18	Latch.
1,368	19	Latch screw.
6,753	20	Oil plug.
28,659	21	Upper gasket.
36,475	22	Lower gasket.
12,305	23	Holding stud.
10,844	24	Holding nut.
15,332	25	Bolt and nut.
12,309	26	Fillister-head screw.
17,138	27	Return-spring stop.
19,070	28	Lower clutch.

S-6 INDEPENDENT BRAKE VALVE

PIECE AND REFERENCE NUMBERS

The S-6 independent brake valve, Fig. 1, is a part of, and regularly supplied with, the No. 6 ET brake equipment. Its weight is 14 lb. The piece number of S-6 valve with brass handle and pipe bracket, complete, is 15,326; with brass handle, complete, without pipe bracket, is 21,990; with malleable-iron handle and pipe bracket, complete, 19,293; and with malleable-iron handle, complete, without pipe bracket, 21,991.

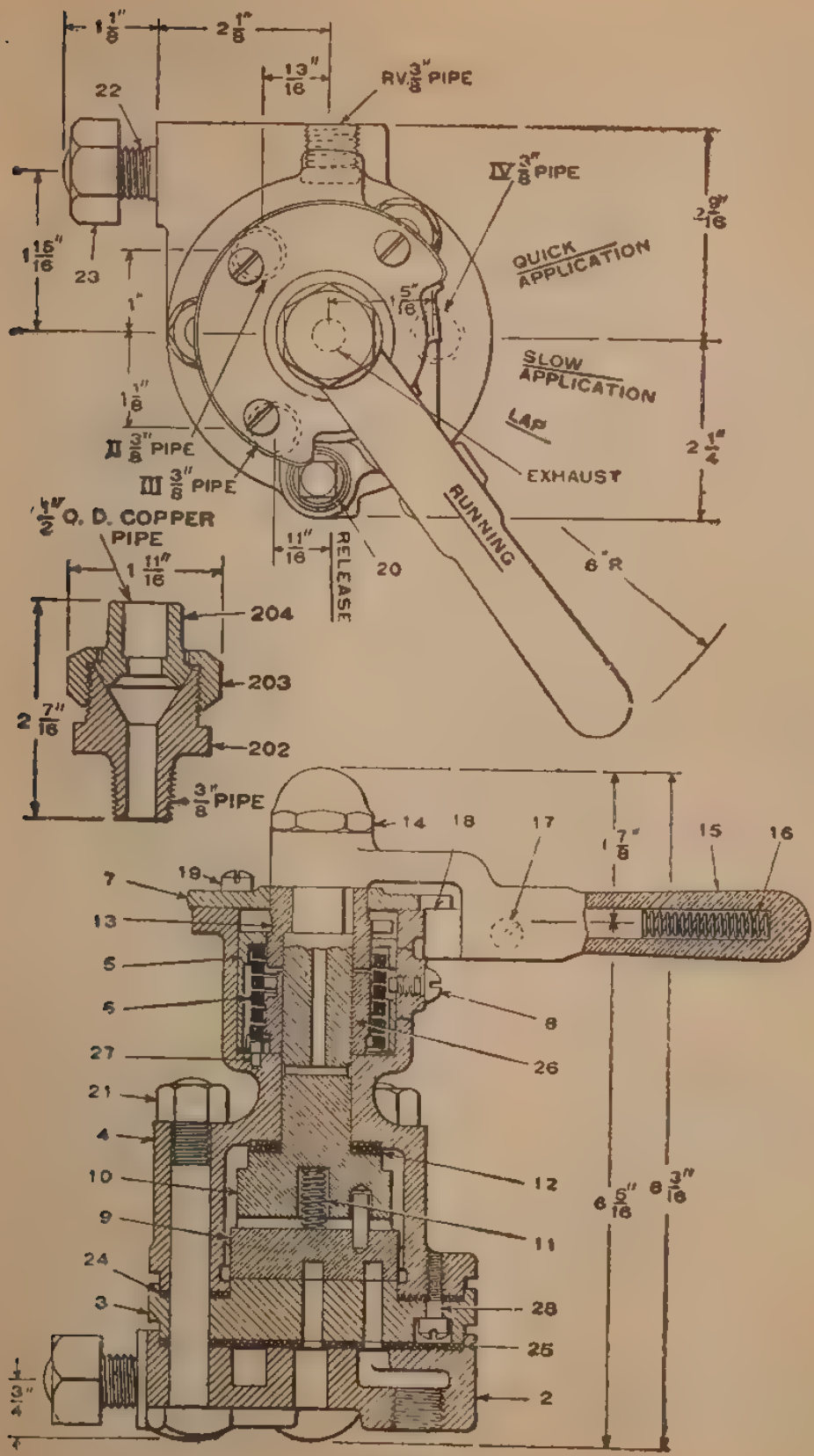
1 1/8"
2 1/8"
13/16"
RV 3/8" PIPE
22
IV 3/8" PIPE
2 9/16"
1 15/16"
23
QUICK APPLICATION
1"
1 5/16"
SLOW APPLICATION
1 1/8"
LAP
II 3/8" PIPE
2 1/4"
EXHAUST
III 3/8" PIPE
1/2" O. D. COPPER PIPE
RUNNING
11/16"
RELEASE
20
8" R
1 11/16"
204
203
2 7/16"
202
3/8" PIPE
14
18
17
1 7/8"
15
16
7
19
13
5
5
8
27
26
21
4
12
10
6 5/16"
8 3/16"
9
11
24
3
28
25
2
4 13/16"

FIG. 1

Pc. No.	*Ref. No.*	*Name of Part*
15,328	2	Pipe bracket, includes 22 and 23.
15,300	3	Rotary-valve seat.
15,327	4	Body, includes 8, 20, and 27.
19,072	5	Return-spring casing.
17,445	6	Return spring.
15,303	7	Cover.
11,943	8	Screw for return-spring casing.
17,255	9	Rotary valve.
17,248	10	Rotary-valve key.
13,109	11	Rotary-valve spring.
6,760	12	Key washer.
19,071	13	Upper clutch.
9,926	14	Handle nut.
11,966	15	Brass handle, includes 16, 17, and 18.
18,748	15	Malleable-iron handle, includes 16, 17, 18.
9,810	16	Latch spring.
1,368	17	Latch screw.
11,932	18	Latch.
12,304	19	Cover screw.
6,653	20	Oil plug.
15,332	21	Bolt and nut.
12,305	22	Holding stud.
10,844	23	Holding nut.
36,476	24	Upper gasket.
28,467	25	Lower gasket.
19,070	26	Lower clutch.
17,138	27	Return-spring stop.
12,304	28	Fillister-head screw.
18,365		Distributing-valve union connection, complete, includes 202, 203, and 204.
18,364	202	Union stud.
15,292	203	Union nut.
18,363	204	Union swivel.

Spring Identification of S-6 Independent Brake Valve

Pc. No.	Out. Dia. *A*, In.	Dia. Wire *B*, In.	Free Height *C*, In.	No. Coils	Material	Name of Spring
9,810	$\frac{9}{32}$	.047	$1\frac{3}{4}$	20	Steel	Latch
13,109	$\frac{11}{32}$	.057	$1\frac{1}{16}$	$9\frac{1}{2}$	Steel	Rotary valve
17,445	$1\frac{11}{16}$	$\frac{5}{32}$ sq.	$1\frac{11}{32}$	$6\frac{1}{2}$	Steel	Return

OPERATION OF S-6 INDEPENDENT BRAKE VALVE

The independent brake valve receives air from the main reservoir through a reducing valve that reduces the pressure to 45 lb. It is connected to the exhaust port of the distributing valve, and to the automatic brake valve by the release pipe. Also, it is connected to the application cylinder of the distributing valve through the application-cylinder pipe, a T-connection being placed in this pipe to which the application-cylinder pipe from the automatic brake valve is coupled.

The independent brake valve does not deliver air direct to the brake cylinders, but passes it into and out of the application cylinder of the distributing valve. This operates the distributing valve and causes it to admit air to the locomotive brake cylinders and exhaust air from them. Also, the brake valve controls the passage of air from the exhaust port of the distributing valve through the release pipe.

Release Position.—The release position is to be used to release the locomotive brakes without regard to the position of the automatic brake valve and equalizing valve in the distributing valve; also, to release the locomotive brakes while the train brakes are being held on by the automatic brake valve, as well as to release the brakes, when desired, on the following engine of a double-header. When the valve is held in this position, air from the application cylinder of the distributing valve passes through the application-cylinder pipe, a port in the rotary-valve seat, a groove in the rotary valve, and the exhaust port in the rotary-valve seat to the atmosphere and releases the locomotive brakes. Also, in release position, a port in the rotary valve, which acts as a warning port to the engineer, registers with a port in the rotary-valve seat and allows air to pass out to the atmosphere through the warning port. The handle of the independent brake valve must be held in release position against the tension of the return spring *6*; otherwise, the spring will automatically return the handle to running position.

Running Position.—The brake valve should be carried in running position except when it is being used to operate the distributing valve. If carried in any other position, it will be impossible to control the release of the locomotive brakes

by the use of the automatic brake valve. In this position, a groove in the face of the rotary valve is moved away from a port in the rotary-valve seat, so that air from the application cylinder of the distributing valve cannot exhaust to the atmosphere. The port leading to the distributing-valve release pipe is connected by means of a groove in the rotary valve with a port in the valve seat, which leads to the release pipe and to the automatic brake valve; consequently, the air in the application cylinder and the chamber of the distributing valve can pass through the distributing-valve release pipe to the independent brake valve, thence into the release pipe, and out to the atmosphere through the automatic brake valve, provided the latter also is in running position. To release the locomotive brakes through the automatic brake valve, both brake valves must be in running position. If the automatic brake valve is in running position and the locomotive brakes are being operated by the independent brake valve, they can be released by placing the independent brake valve in running position, because air from the application cylinder of the distributing valve can then pass through the release pipe and automatic brake valve to the atmosphere.

Lap Position.—The lap position is used when it is desired to blank all ports in the rotary-valve seat and prevent air from passing through the brake valve. When the valve handle is in this position, all ports are blanked so that air cannot pass through the brake valve. With the independent brake valve in lap position, the locomotive brakes can be applied by means of the automatic brake valve by reducing brake-pipe pressure, but they cannot be released through the automatic brake valve.

Slow-Application Position.—The slow-application position is to be used when it is desired to apply the locomotive brakes lightly or gradually and independently of the train brakes. Also, when the locomotive is standing, this position is used to maintain brake-cylinder pressure so as to prevent the locomotive brakes from leaking off through brake-cylinder leakage and thus allowing the engine to start when standing on a grade or when the throttle is leaking. When the handle of the valve is placed in this position, the ports in the rotary valve and its seat are still blanked as in lap position, except that one port

in the face of the rotary valve registers with a port in the rotary-valve seat. This allows air at a pressure of 45 lb. to pass from the reducing-valve pipe into the application-cylinder pipe and the application cylinder of the distributing valve, thus applying the locomotive brakes slowly. To graduate the application of the locomotive brakes, the handle should be moved to slow-application position until the desired pressure is obtained in the application cylinder, when it should be returned to lap position. The red hand on the duplex gauge will register the brake-cylinder pressure of the application. When the engine is standing at a coal chute, a water plug, or on a turntable, or while work is being done on it, the independent brake valve should be left in slow-application position so as to keep the locomotive brakes applied.

Quick-Application Position.—The quick-application position is used when it is desired to make a quick application of the independent brake. In such cases, the handle of the independent brake valve should be moved to quick-application position and held there until the locomotive brakes are fully applied. If the handle is not held in quick-application position, the return spring *6* will move it back to slow-application position. When the handle is in quick-application position, the rotary valve forms a direct connection between the reducing-valve pipe and the application cylinder of the distributing valve.

RETURN-SPRING ARRANGEMENT

The return-spring arrangement of the S-6 independent brake valve, shown in Fig. 2, is intended to make it impossible for the engineer to leave the brake-valve handle either in release position or in quick-application position. It consists of a return-spring casing *5*, a return spring *6*, an upper clutch *13*, and a lower clutch *26*, all of which when assembled fit in the return-spring chamber in the body of the brake valve. This chamber is shown in

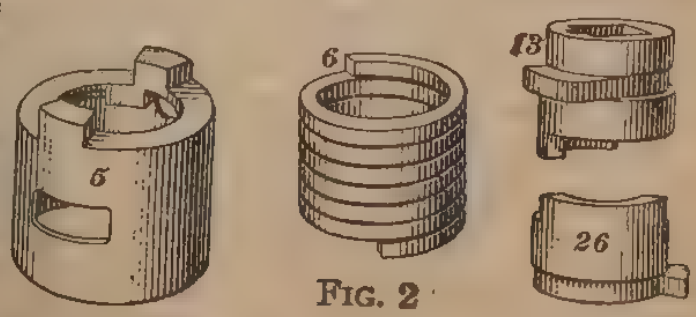

FIG. 2

Fig. 3, which is a sectional view of the brake-valve body with the return-spring arrangement removed. In this view is shown the return-spring casing screw *8* and the return spring stop *27*.

Moving the valve handle from running position to release position puts the return spring under tension, so that the spring will return the handle to running position if the handle is let go. The spring exerts no influence on the brake-valve handle between running and slow-application positions. Moving the handle from slow- to quick-application position again puts the spring under tension that returns the handle to slow-application position if the handle is let go. The brake valve, therefore, will not stay in either release or quick-application position unless held there.

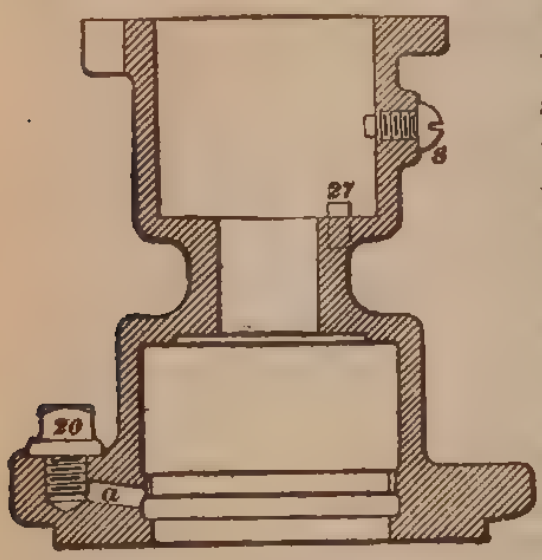

FIG. 3

Action of Mechanism.—The return-spring mechanism is operated through the medium of the rotary-key stem and the brake-valve handle. The lower clutch has a lug on its lower end that by resting against the return-spring stop, Fig. 3, prevents this clutch from being turned to the left in the spring chamber. Its upper end is notched out to fit a similar notch in the bottom end of the upper clutch. These notches are such that the brake-valve handle can turn the upper clutch from slow-application position to release position without disturbing the lower clutch. In moving the handle to the right, however, the two clutches engage in slow-application position, so that moving the handle beyond that position toward quick-application position causes the upper clutch to rotate the lower clutch to the right. As the casing holds the upper end of the spring stationary, this places the spring under tension and furnishes the power to move the handle back to slow-application position.

The lower end of the return spring rests against the far side of the lug of the lower clutch, which holds it stationary;

the upper end of the spring rests against the stop lug of the casing. In the running position of the brake valve, the lug on the upper clutch strikes against the lug on the casing, and moving the handle to release position causes the casing to be rotated to the left. As the lower end of the spring is held stationary by the lower clutch, turning the casing to the left puts the spring under tension and furnishes the power to return the handle to running position.

Removing Return-Spring Arrangement.—To remove the return-spring arrangement, first move the rotary-valve handle to release position and while holding it there remove the casing screw, Fig. 3. Move the handle back to running position, remove the handle nut, take off the rotary-valve handle, take out the three cover screws, and remove the cover. Place the thumb over one of the casing lugs and hold down the casing while prying up the upper clutch by inserting a pointed tool under the lug that engages the lug of the casing. This will disengage the upper clutch from the lower one and release the tension of the return spring, as will be indicated by a slight click. The upper clutch, casing, spring, and lower clutch can then be removed in the order stated.

Replacing Return-Spring Arrangement.—In order to replace the return-spring arrangement easily, the rotary-valve key and stem should be in position in the valve body and the casing screw removed. Place the lower clutch on the rotary-key stem with the lug down, drop it into the return-spring chamber, and turn it until the lug is against the return-spring stop and to the right of it, the front of the brake valve facing the person doing the work. Next, drop the spring over the key stem and lower clutch and bring the end of the spring against the right face of the lug of the lower clutch. Next, drop the casing over the spring and bring the return-spring stop lug up against the top end of the spring. Turn the rotary-valve key until the position pin (located near the top of the key stem) points toward the casing-screw hole. Place the upper clutch properly on the key stem with the flat end up, and press the clutch down as far as it will go; this brings the clutch lug between the lugs of the casing. Next, place the brake-valve handle on the key stem and move it to release position; this will put

tension on the spring and will bring the screw slot opposite the casing screw. Press down the casing until its lugs are flush with the top of the valve body, and then screw the casing screw all the way in; it will extend into the slot in the casing as intended. Let the brake-valve return to running position and press the upper clutch down as far as it will go; this will cause it to take its proper position with respect to the lower clutch, the two clutches fitting together. Next, remove the handle, secure the cover in place, and replace the handle and secure it by means of the handle nut.

STRAIGHT-AIR BRAKE VALVES

S-3 (¾-IN.) STRAIGHT-AIR BRAKE VALVE

Piece and Reference Numbers.—The S-3 (¾-in.) straight-air brake valve, shown in Fig. 1, is a part of, and is regularly supplied with, the combined automatic and straight-air brake; it is known as schedule SWA and weighs 16 lb. The piece number, with brass handle, complete, is 2,626; with a malleable-iron handle, 19,382. The piece and reference numbers of the various parts are given in the accompanying list.

Pc. No.	*Ref. No.*	*Name of Part*
43,647	2	Body.
2,620	3	Shaft cap nut.
2,621	4	Valve cap nut.
1,289	5	Quadrant.
2,310	6	Quadrant bolt and nut.
2,628	7	Shaft, complete, includes steel wearing plates.
2,426	8	Leather shaft washer.
2,619	9	Shaft-spring washer.
2,616	10	Shaft spring.
2,629		Valve, complete, includes 11, 12, 13, and 14.
4,855	11	Valve stem.
2,623	12	Valve.
2,624	13	Valve leather.
2,625	14	Valve nut.
2,616	15	Valve spring.
2,632	16	Brass handle, complete, includes 17, 18, 19, 20, 21, and 22.
18,721		Malleable-iron handle, complete, includes 17, 18, 19, 20, 21, and 22.

Pc. No.	Ref. No.	Name of Part
1,367	17	Latch spring.
1,292	18	Latch.
1,368	19	Latch screw.
5,191		Handle clamp bolt, complete, includes 21 and 22.
1,293	20	Clamp bolt, only.
1,294	21	Thumb nut.
1,291	22	Pin.
2,616	27	Valve spring.

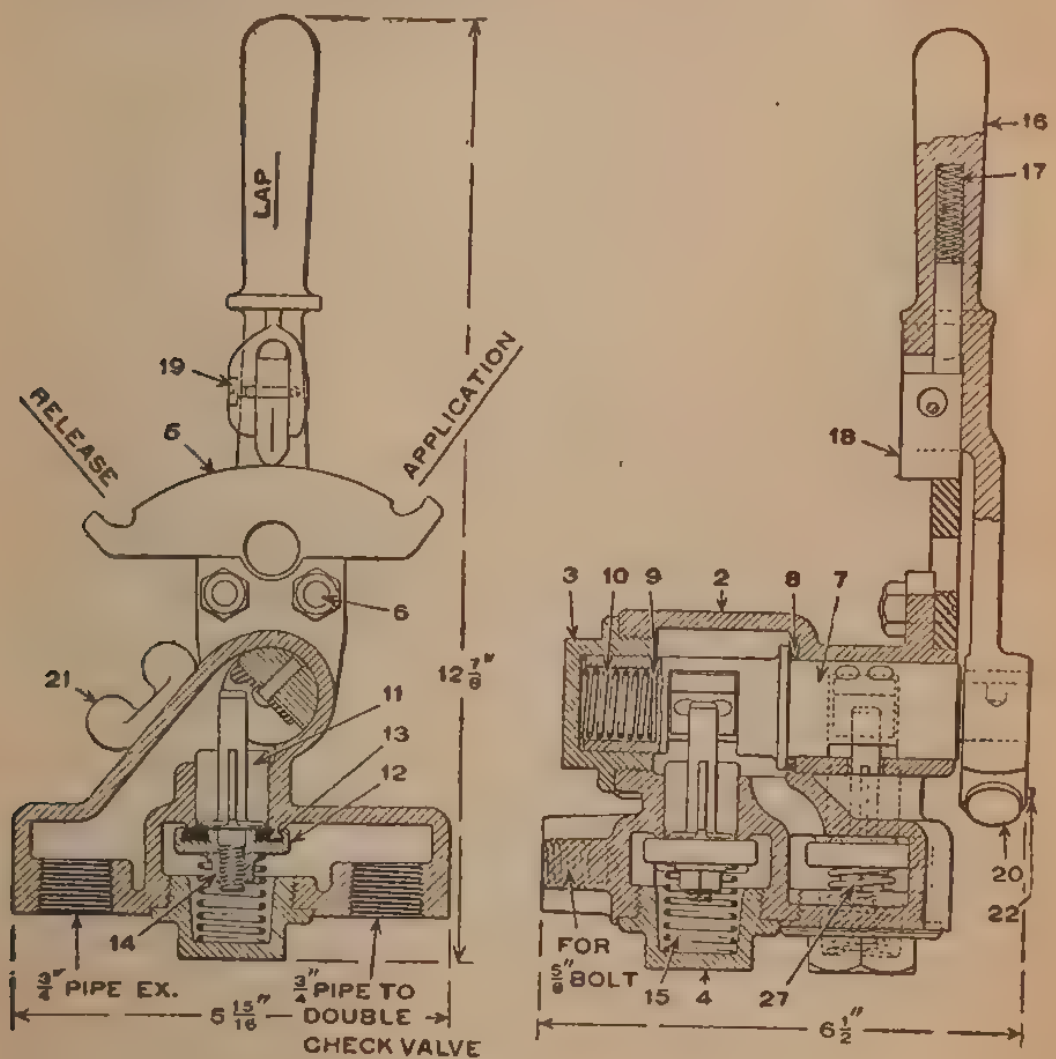

FIG. 1

Operation.—To apply the brake, the handle *16* is moved to application position. This movement causes valve *12* to be unseated, and allows air to flow from the chamber below the valve, past valve *12*, into the upper chamber and thence into the pipe leading to the brake cylinder. In this position, the

other valve is closed so that no air can escape to the exhaust. If the handle is left in this position, the brake-cylinder pressure will equalize at 45 lb.—that being the pressure at which the slide-valve feed-valve for the straight-air equipment is set to reduce to—and no higher brake-cylinder pressure can be obtained with the straight air.

To make a partial application of the brake, the handle *16* is moved to application position until the desired brake-cylinder

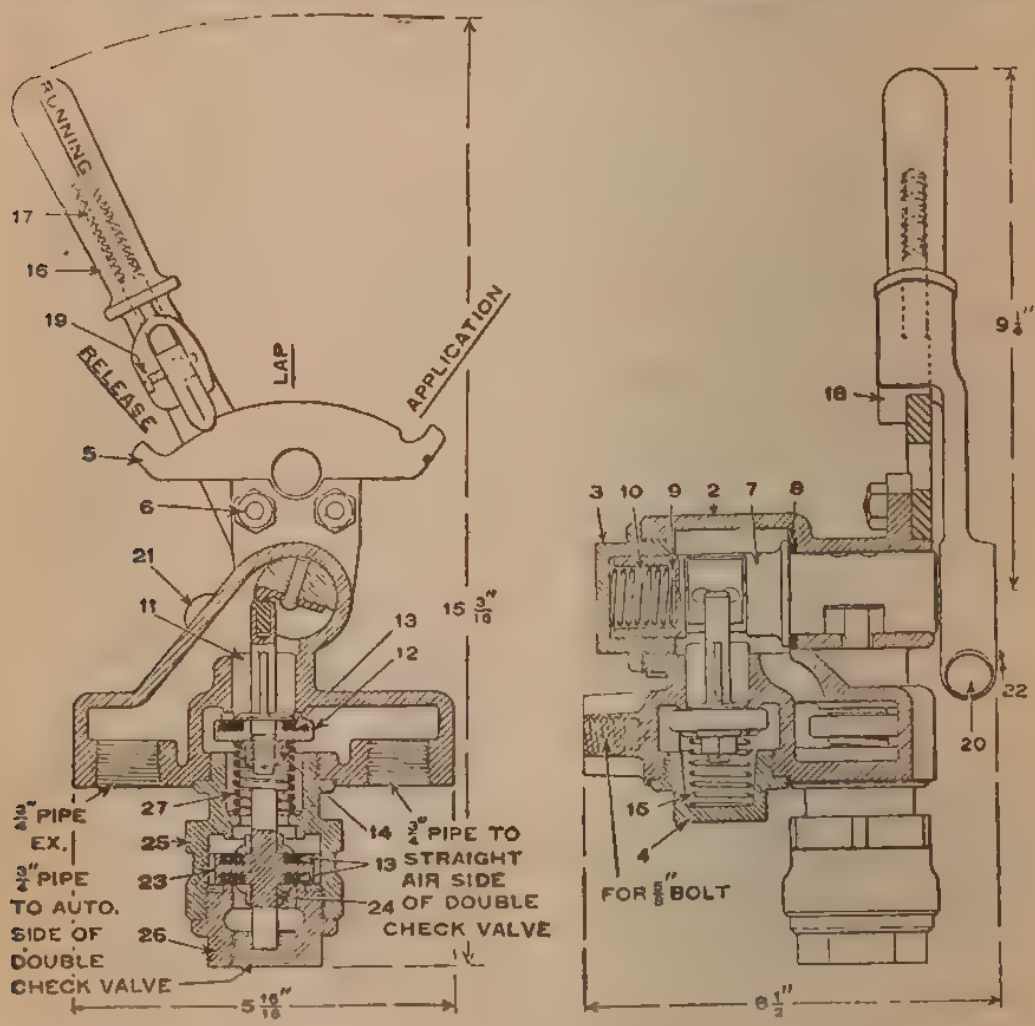

FIG. 2

pressure is obtained, when it is moved to lap. To increase the application, move the handle to application position for the proper increase, and then back to lap.

In lap position, both valves are closed, so no air can pass into the brake cylinder, or from the brake cylinder to the atmosphere. Valve *12* is held up against its seat by the combined

efforts of spring *15* and the pressure beneath the valve; the other valve is held up against its seat by spring *27* and the pressure beneath it.

To release the brake, move the handle to release position. This allows valve *12* to close and cut off the supply of air to the brake cylinder, and the other valve is opened and allows brake-cylinder air to escape to the atmosphere.

A graduated release can be made by moving the handle to release position until the desired reduction of brake-cylinder pressure is made, and then moving it to lap.

The notches at the ends of the quadrant that the latch fits into are intended to hold the handle in position against the tension of the springs *15* and *27*. If these notches become worn, the force of the spring *27* is liable to return the handle to lap position from release position. Since February, 1917, the S-3-A quadrant has been made standard for the S-3 brake valve also.

S-3-A (¾-IN.) STRAIGHT-AIR BRAKE VALVE

Piece and Reference Numbers.—The S-3-A (¾-in.) straight-air brake valve, shown in Fig. 2, is special and is supplied instead of the S-3 brake valve where independent driver-brake release is desired and when specified on orders; its weight is 18 lb. Its piece number, with brass handle, complete, is 17,537; with a malleable-iron handle, 19,168. The piece and reference numbers of the various parts are given in the accompanying list. If it is desired to add the independent driver-brake release feature to S-3 straight-air brake valves already in service, order should specify Piece No. 16,235, which includes all parts necessary to change an S-3 into an S-3-A brake valve; viz., Ref. Nos. 5, 23, 25, 26, 27.

Pc. No.	*Ref. No.*	*Name of Part*
43,647	2	Body.
2,620	3	Shaft cap nut.
2,621	4	Valve cap nut.
16,125	5	Quadrant.
2,310	6	Quadrant bolt and nut.
2,628	7	Shaft, complete, includes 9.
2,426	8	Leather shaft washer.
2,619	9	Shaft-spring washer.
2,616	10	Shaft spring.

Pc. No.	*Ref. No.*	*Name of Part*
2,629		Valve, complete, includes 11, 12, 13, and 14.
4,855	11	Valve stem.
2,623	12	Valve.
2,624	13	Valve seat.
2,625	14	Valve-stem nut.
2,616	15	Valve spring.
2,632	16	Brass handle, complete, includes 17, 18, 19, 20, 21, and 22.
18,721	16	Malleable-iron handle, complete, includes 17, 18, 19, 20, 21, and 22.
1,367	17	Latch spring.
1,292	18	Latch.
1,368	19	Latch screw.
5,191		Handle clamp bolt, complete, includes 21 and 22.
1,293	20	Clamp bolt, only.
1,294	21	Thumb nut.
1,291	22	Pin.
16,124	23	Check-valve stem, complete, includes two each of 13 and 24.
1,738	24	Check-valve nut.
16,121	25	Check-valve case.
16,122	26	Check-valve cap nut.
16,190	27	Valve spring for driver-brake release attachment.

Spring Identification of S-3 and S-3-A Straight-Air Brake Valves

Pc. No.	Out. Dia. *A*, In.	Dia. Wire *B*, In.	Free Height *C*, In.	No. Coils	Material	Name of Spring
1,367	$\frac{11}{32}$	.057	$1\frac{3}{4}$	16	Steel	Handle latch
2,616	$\frac{15}{16}$	.095	2	8	Nickeled Steel	Shaft Valve
16,190	$\frac{31}{32}$	.114	2	7	Nickeled Steel	Driver-brake release valve

Operation of S-3-A Straight-Air Brake Valve.—The S-3-A straight-air brake valve is a special valve furnished only when it is desired to provide for independent driver-brake release. It is similar to the S-3 brake valve, except for the addition of a device called the *driver-brake release attachment* (reference

numbers 23, 24, 25, and 26), and the addition of a running-position notch to the quadrant corresponding to the release position of the S-3 brake valve, the release position of the S-3-A brake valve being used for the independent release of the driver brake. The driver-brake release attachment screws into the body of the brake valve as shown in Fig. 2, in place of the valve cap nut *4*, Fig. 1, and makes possible the releasing of the driver brakes after an automatic application, without affecting the brakes on the train or tender, thereby providing for independent operation of the driver brakes.

The driver-brake release attachment is connected to the automatic side of the driver-brake double check-valve, the other brake-valve connections remaining as in the S-3 brake valve. When brakes are applied automatically, the double-seated check-valve *23* will be forced against the upper seat, preventing escape of air through the brake-valve exhaust port. To make an independent release of the driver brakes after an automatic application, the straight-air brake valve is moved to release position, which forces the extended portion of release valve *14* against the upper projection of the double-seated check-valve, forcing the latter from its seat and allowing the driver-cylinder air to pass by the check-valve and to the atmosphere through the brake-valve exhaust opening.

The operation when applying the brakes by straight air is the same as with the S-3 brake, except that the brake-cylinder pressure is on top of the check-valve *23* and forces it to its lower seat, thus preventing brake-cylinder air from escaping through the triple-valve exhaust port by way of connection to the automatic side of the double check-valve. The release can be made by using release or running position, but the handle should invariably be returned to and left in running position.

Cleaning and Oiling.—In cleaning and oiling the straight-air brake valve, all parts should be wiped clean and the application and release valves replaced without oil; a little heavy oil or brake-cylinder grease can be used to good advantage on the main shaft and its gasket. The slide-valve reducing valve should be thoroughly cleaned and a small amount of valve oil used on its piston and slide valve. The double check-valves and safety valves should be cleaned, but not oiled.

CARE OF BRAKE VALVES

There is a wide range of variation in the time a rotary valve will continue working satisfactorily in general service. Some valves will run 3, 4, or 6 mo., while others will not run as many weeks. Tallow or vaseline are good lubricants for the rotary, but oil of any kind should be used sparingly on any part of the brake apparatus, except the steam end of the pump. Oil that has a tendency to gum should never be used.

Whenever the rotary valve works hard, the brake valve should be taken apart and the rotary cleaned and oiled, to prevent cutting. At the same time, the packing ring should be cleaned, but without removing it, since, if removed, it is liable to be sprung out of true, which will necessitate refitting to the bushing in which it works. Clean the stem and seat of the exhaust valve thoroughly, but leave no oil on either, as it will catch particles of dirt and scale and cause trouble.

Rotary Working Hard.—The chief causes of a rotary working hard are: too free use of oil in the air end of the pump, or the use of poor oil; constant use of the emergency position of the valve, which tends to draw dirt and scale from the train pipe on the rotary seat; a hot pump, the heat from which will cake the oil on the rotary seat; the handle nut *7* being screwed down so tight as to cause key washer *13* to bind on the top casing of the engineer's valve; the gasket may be worn so thin that the rotary key *12* rubs against the valve body.

Lubricating Brake Valves.—If the handle of either the automatic or the independent brake valve does not operate easily, the rotary valve or the rotary-valve-key gasket is probably dry from lack of lubrication. To remedy this trouble when the brake system is charged, close the double-heading cock in the brake pipe below the brake valve; also, close the main-reservoir cock in the main-reservoir pipe. Operate the brake valves to remove all pressure from them; remove the oil plug in the automatic brake-valve body, fill the hole with good valve oil, and move the valve handle from full-release to emergency position and back a few times, to work the oil between the rotary and its seat. Fill the oil hole and replace the plug. Next, remove the cap nut from the top of the

rotary-valve key, fill the hole in the key with oil, push down on the key, and move the handle a few times; then, again fill the hole with oil and replace the cap nut. Treat the independent brake valve in the same manner.

FEED-VALVES

C-6 SINGLE-PRESSURE FEED-VALVE

Piece and Reference Numbers.—The C-6 feed-valve, Fig. 1, has superseded the B-3 feed-valve and is regularly supplied

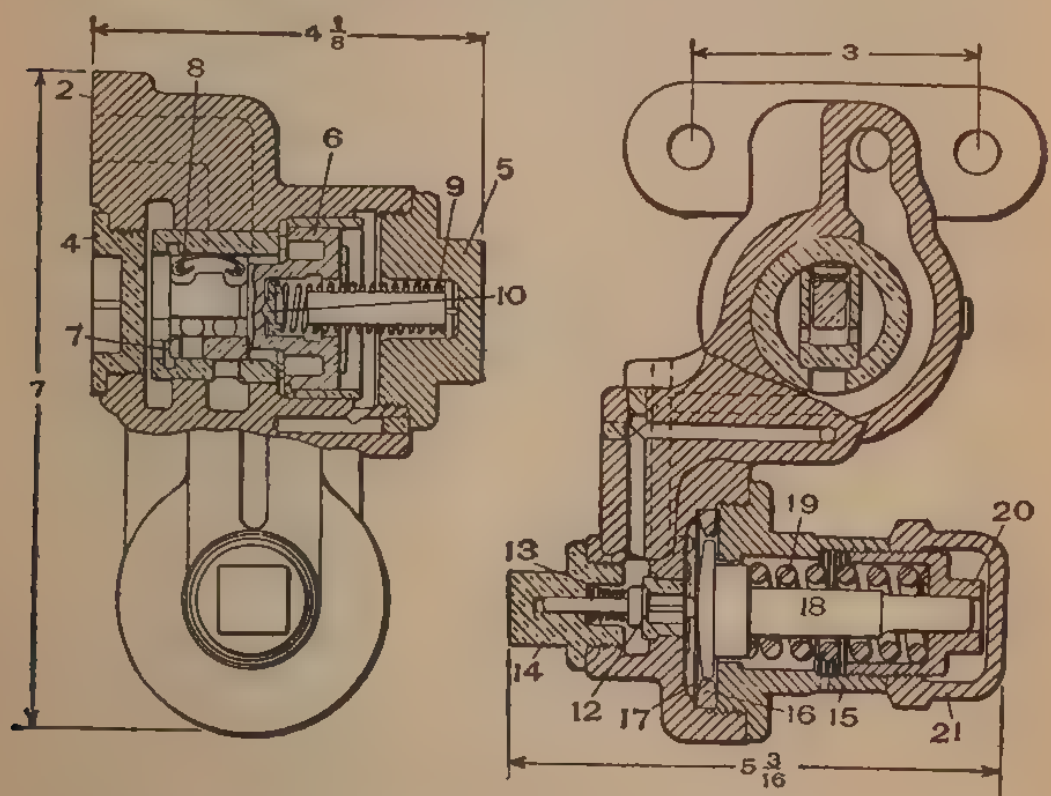

FIG. 1

with G-6 brake valve, and as a reducing valve with the ET locomotive brake equipments, and with schedule SWA. Its weight is 10 lb. The piece number of the C-6 feed-valve, complete, without pipe bracket or gasket, is 18,480; with F crossed-passage pipe bracket and gasket, complete, 18,481; with H direct-passage pipe bracket and gasket, complete, 18,482.

Pc. No.	Ref. No.	Name of Part
18,460	2	Valve body, bushed.
18,458	4	Flush nut.
8,946	5	Cap nut.
18,454	6	Piston.
18,455	7	Supply valve.
1,411	8	Supply-valve spring.
18,286	9	Piston spring.
3,054	10	Piston-spring tip.
16,183	12	Regulating valve.
1,060	13	Regulating-valve spring.
6,509	14	Regulating-valve cap nut.
1,062	15	Spring box.
1,064	16	Diaphragm ring.
1,063	17	Diaphragm, 2 pieces required, each.
1,065	18	Diaphragm spindle.
40,452	19	Regulating spring.
11,261	20	Regulating nut.
1,067	21	Check-nut.

Spring Identification of C-6 Feed Valve

Pc. No.	Out. Dia. *A*, In.	Dia. Wire *B*, In.	Free Height *C*, In.	No. Coils	Material	Name of Spring
1,060	$\frac{5}{16}$	.049	$\frac{11}{16}$	7	Brass	Regulating-valve
40,452	1	.22	2	$6\frac{1}{2}$	Steel	Regulating

Operation of Feed-Valve.—When the feed-valve is not under pressure, the supply valve *7* is closed and the regulating valve *12* is open. The regulating spring *19* forces the supply valve *17* back until it covers its port, while the regulating spring *19* forces the diaphragm to unseat the regulating valve *12*. With less than 70 lb. brake-pipe pressure, both the supply valve and the regulating valve are open and air is feeding into the brake pipe. Main-reservoir air enters the chamber to the left of piston *6*, forcing the piston forwards until the supply valve uncovers its port. The air then flows into the brake pipe, increasing the pressure.

While brake-pipe pressure is less than 70 lb., the regulating valve is held off its seat by the regulating spring making a direct

opening between the chamber on the right of piston *6* and the brake pipe. Leakage that takes place past the piston *6* passes directly to the brake pipe, so the chamber to the right of piston *6*, and the chamber to the left of diaphragm *17*, are maintained at brake-pipe pressure. When 70 lb. is obtained in the brake pipe, the pressure on the diaphragm *17* is sufficient to compress the regulating spring enough to allow the regulating valve to close. This cuts off communication between the chamber to the right of piston *6* and the brake pipe, and the leakage occurring past piston *6* then quickly charges the chamber to the same pressure as the pressure in the chamber to the left of piston *6*, which allows the piston spring to move piston *6* and the supply valve to closed position. In this position no air can feed into the brake pipe, since the supply port is closed.

The parts of the feed-valve remain in these positions as long as the brake-pipe pressure remains at 70 lb. Any reduction of brake-pipe pressure, however, allows the regulating spring *19* to expand and unseat the regulating valve; pressure in the chamber to the right of piston *6* is then immediately reduced to brake-pipe pressure, so that the greater pressure of the air in the chamber to the left of piston *6* forces the piston to open position.

Regulation of Feed-Valve.—If the feed-valve does not regulate brake-pipe pressure to the proper amount, it can be made to do so by adjusting the tension of the regulating spring by means of the regulating nut *20*. If it maintains a pressure below the standard, slowly turn the regulating nut to the right until the tension of the spring is sufficiently increased to give proper regulation. If it maintains too high a pressure, place the brake valve in service position and reduce the brake-pipe pressure several pounds below standard; then turn the regulating nut to the left so as to relieve the spring of a little of its tension, place the brake valve in running position, and note the pressure that is then maintained. If still too high, proceed as before, and continue until the feed-valve is properly adjusted. In order to turn the regulating nut *20*, the check-nut *21* must first be removed. After the regulating spring has been properly adjusted, the check-nut must be replaced.

B-6 DOUBLE-PRESSURE FEED-VALVE

Piece and Reference Numbers.—The B-6 double-pressure feed-valve, shown in Fig. 2, has superseded the B-4 double-pressure feed-valve, and is a part of, and is regularly supplied with, the ET locomotive brake equipments; its weight is 10½ lb. The piece number of the feed-valve, complete, without pipe bracket or gasket, is 18,477; with F crossed-passage

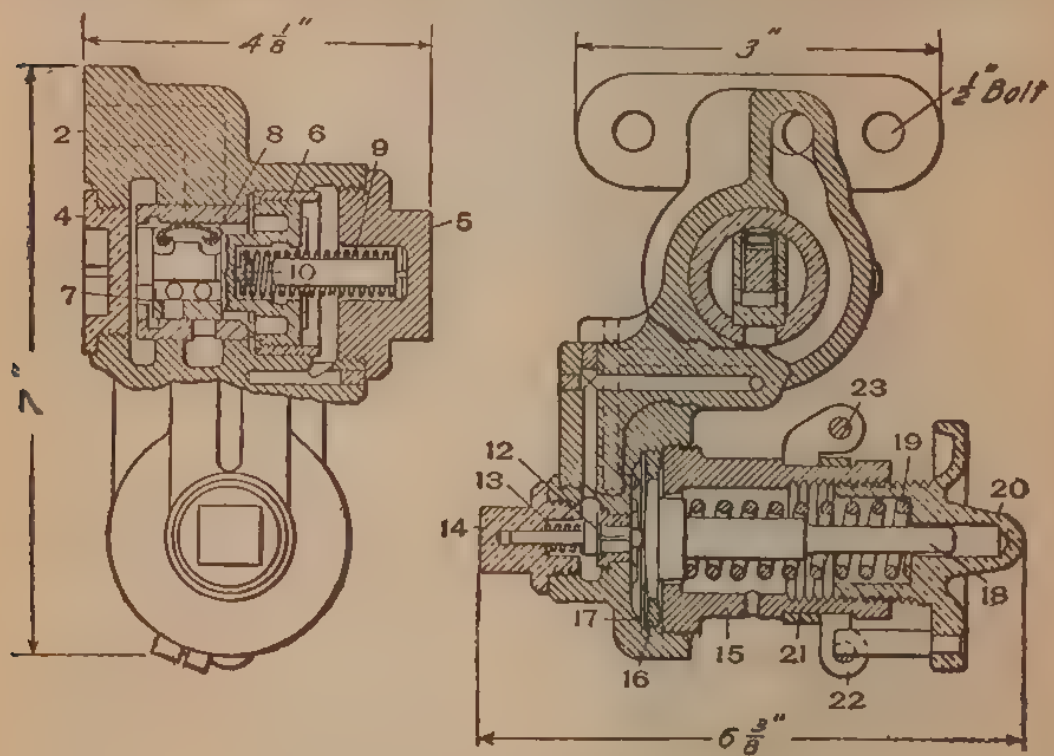

FIG. 2

pipe bracket and gasket, complete, 18,478; and with H direct-passage pipe bracket and gasket, complete, 18,479. The piece and reference numbers of the various parts are given in the accompanying list.

Pc. No.	*Ref. No.*	*Name of Part*
18,460	2	Valve body, bushed.
18,458	4	Flush nut.
8,946	5	Cap nut.
18,454	6	Piston.
18,455	7	Supply valve.
1,411	8	Supply-valve spring.
18,286	9	Piston spring.
3,054	10	Piston-spring tip.
16,183	12	Regulating valve.
1,060	13	Regulating-valve spring.
6,509	14	Regulating-valve cap nut.

Pc. No.	Ref. No.	Name of Part
13,241	15	Spring box.
1,064	16	Diaphragm ring.
1,063	17	Diaphragm, 2 pieces required, each.
13,243	18	Diaphragm spindle.
40,451	19	Regulating spring.
13,259	20	Regulating hand wheel.
13,858	21	Inner hand-wheel stop, includes 23.
13,859	22	Outer hand-wheel stop, includes 23.
12,304	23	Stop-screw.

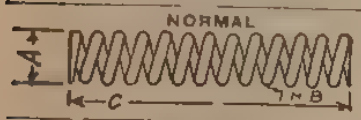

Spring Identification of B-6 Feed Valve

Pc. No.	Out. Dia. *A*, In.	Dia. Wire *B*, In.	Free Height *C*, In.	No. Coils	Material	Name of Spring
1,060	$\frac{5}{16}$	.049	$\frac{11}{16}$	7	Brass	Regulating-valve
40,451	1	.22	$2\frac{3}{4}$	9	Steel	Regulating

Description of B-6 Feed-Valve.—The B-6 feed-valve, used with the No. 6 ET equipment, is an improved form of feed-valve. In construction and operation it is practically the same as the C-6 feed-valve except that it will charge to the regulated pressures somewhat quicker and will maintain the pressure more accurately under the variable conditions of short and long trains. It is connected to a pipe bracket located in the piping between the main reservoir and the H-6 brake valve, and is supplied with air from the main reservoir. It regulates the pressure in the feed-valve pipe as well as in the brake pipe in running and holding positions of the H-6 brake valve. It has a double-regulation feature, so that it can be quickly adjusted to change the regulated pressure from one standard pressure to another. This feed-valve is interchangeable with previous types of slide-valve feed-valves and can be attached to the F-6 and G-6 brake valves, thereby doing away with the reversing cock, the extra feed-valve, and the pipes connecting it to the brake valves.

There is a quick-thread screw on the regulating hand wheel *20* that will change the adjustment of the regulating spring *19*

from 70 to 110 lb., or to other moderate differences of pressure when the wheel is turned. Stops *21* and *22* are split rings that fit around the spring box *15* and are clamped in their proper positions by the screws *23*. The regulating spring unseats the regulating valve and determines the pressure to be carried in the feed-valve pipe. When the pressure in the chamber above the diaphragm *17* is less than the tension of the spring *19*, the diaphragm is held over against the pressure of the air and the regulating valve is held off its seat.

When the pressure in the feed-valve pipe reaches the standard desired, the pressure above the diaphragm will overcome the tension of spring *19* and move the diaphragm to the right, allowing the regulating-valve spring to move the regulating valve to its closed position. Spring *13* holds the regulating valve *12* against the diaphragm in open position, and against its seat in closed position. The diaphragm ring *16* makes an air-tight joint with the diaphragm against the valve body, and prevents the escape of air past it into the regulating-spring chamber.

Regulation of B-6 Feed-Valve.—To insure accuracy in regulating, the B-6 feed-valve should be connected with a correct pressure gauge. The regulating hand wheel *20* should be screwed in to increase the pressure at which the valve will close, and screwed out to reduce the pressure. To adjust the wheel, first slacken screw *23* and turn the adjusting wheel until the valve is adjusted properly for the desired lower pressure. Then move the outer hand-wheel stop *22* until it comes against the pin in the wheel and fasten the stop in this position on the spring case *15* by means of screw *23*. Next, turn the hand wheel *20* in the opposite direction until the valve is adjusted properly for the desired higher pressure and then move the inner hand-wheel stop *21* around to bring the stop against the pin in the wheel and secure it in that position with screw *23*. Once the feed-valve is adjusted for the proper high and low pressures, the pressure in the feed-valve pipe can be quickly changed from high to low or from low to high by simply turning the regulating wheel so as to move the stop-pin from stop *21* to stop *22* or from stop *22* to stop *21*. If it is desired to carry a pressure between the low and the high

pressure, the wheel can be stopped at any point between the stops *21* and *22*.

Care of B-6 Feed-Valve.—In order that the feed-valve may perform its functions properly, it is necessary that it be cleaned and oiled occasionally. If the feed-valve is to be cleaned when the air-brake system is charged with air, it must be relieved of all pressure before it can be taken apart. To do this, close the cut-out cock in the brake pipe underneath the brake valve, so as to save the air in the brake pipe, and place the brake valve in service or emergency position to empty the feed-valve and the short piece of brake pipe above the cut-out cock; the feed-valve may then be taken apart and cleaned. Clean both the piston *6* and its cylinder, and the supply valve *7* and its bushing, very carefully, leaving no lint on the parts, for it will cause trouble; clean, also, the regulating valve and its seat and the hole in the regulating-valve cap nut into which the regulating valve extends.

In oiling the supply valve, only a small amount of valve oil, vaseline, mutton tallow, or some similar lubricant should be used, the oil being applied with the finger. Only a very small amount of some light lubricating oil (engine oil will do) should be used on the supply-valve piston and its cylinder, and that should be well rubbed on with the fingers. If too much or too heavy oil is used on these parts, it will get into the grooves of the piston and act as an oil packing and will interfere very materially with the action of the feed-valve. The regulating valve should not be oiled, but should be replaced dry.

PIPES, BRACKETS, AND REVERSING COCKS

PIPE BRACKETS

When the feed-valve is placed in the piping of a brake equipment instead of on the brake valve, as in the ET and the SWA equipments, a pipe bracket to which the feed-valve is attached must be used.

F Crossed-Passage Pipe Bracket.—The F pipe bracket shown in Fig. 1 is the standard for the ET locomotive brake

equipment, and is regularly furnished therewith unless otherwise specified on orders; its weight is 5½ lb. The piece number

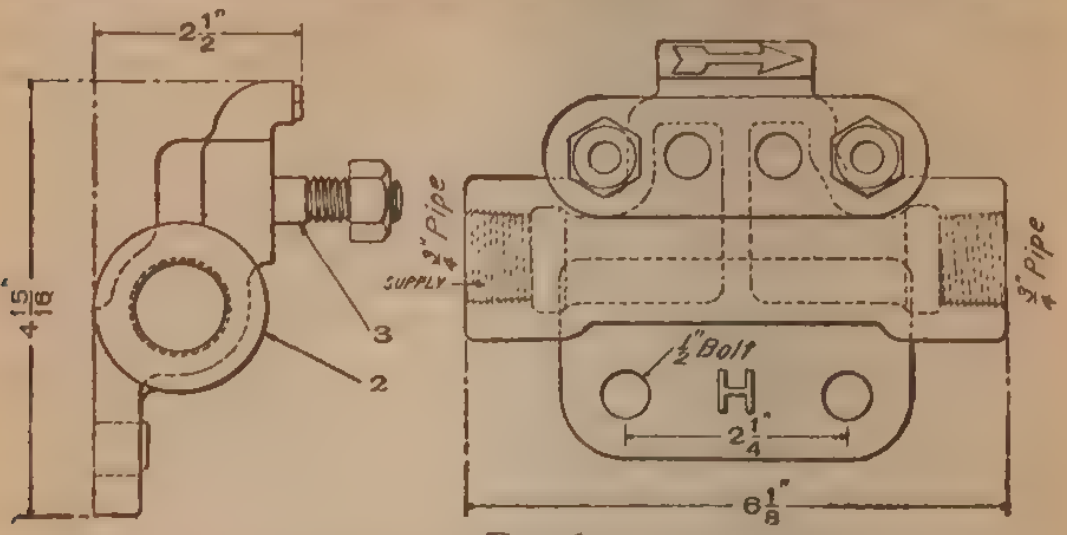

FIG. 1

of the F crossed-passage pipe bracket, complete, is 18,240; of the F pipe-bracket body, 18,239; and of the stud and nut,

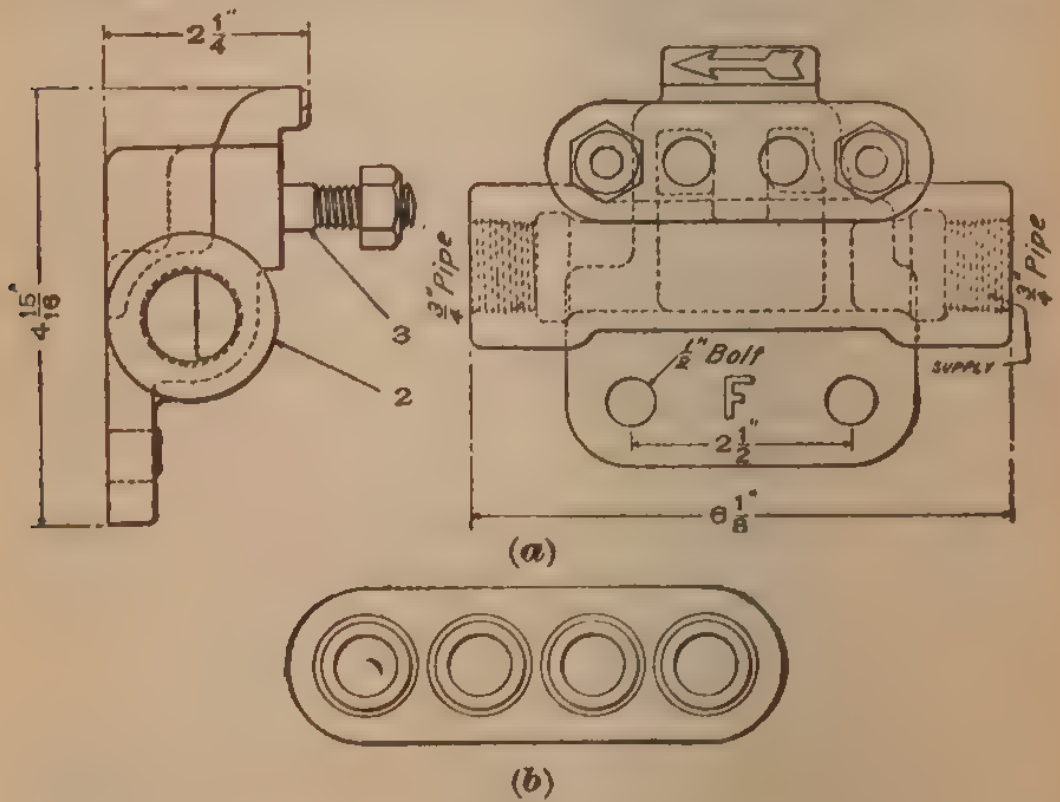

FIG. 2

35,385. The reference number of the pipe-bracket body is 2; and of the stud and nut, 3.

H Direct-Passage Pipe Bracket.—The H pipe bracket, shown in Fig. 2 (*a*), is the standard for schedule SWA, and is regularly furnished therewith unless otherwise specified on orders; its weight is 5 lb. The piece number of the H direct-passage pipe bracket, complete, is 18,463; of the H pipe-bracket body, 18,464; and of the stud and nut, 35,385. The reference number of the pipe-bracket body is 2; and of the stud and nut, 3. The two ports between the two studs *3* are the inlet and outlet ports of the bracket. They come opposite the similar ports of the feed-valve. The arrow on the projecting part at the top of the bracket shows the direction of flow of air through the brackets.

Feed-Valve Gasket.—The piece number of the feed-valve gasket is 2,012; the gasket is shown in Fig. 2 (*b*).

BRAKE-VALVE FEED-VALVE PIPE CONNECTION

In the schedule U and the high-speed equipments, the feed-valve is removed from the brake valve and two feed-valves are placed on a reversing cock. In these equipments, therefore, the brake valve is supplied with a feed-valve pipe bracket to which the pipes to the reversing cocks are connected. The feed-valve pipe connection, Fig. 3, is furnished with the G-6 brake valve, piece numbers 2,585 and 22,096, and with the high-speed brake, schedule AG, and the double-pressure control, schedule U; its piece number is 2,586, and its weight, $\frac{3}{4}$ lb.

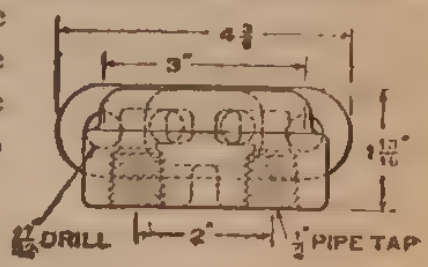

FIG. 3

REVERSING COCK

The reversing cock, shown in Fig. 4, is used in connection with double-pressure control, schedule U, and high-speed brake, schedule AG, equipments; its weight is 14 lb. The piece number of the reversing cock complete is 2,574; the piece and reference numbers of the various parts are as follows:

Pc. No.	*Ref. No.*	*Name of Part*
2,576	2	Body, bushed.
2,579	3	Key.

2,098	4	Key spring.
2,097	5	Cap.
2,100	6	Handle.
2,305	7	Stud and nut.
1,635		¼-in. pipe plug.

The left feed-valve is adjusted, usually, to 70 lb.; the right is adjusted to 110 lb. There are two positions in which the handle of the reversing cock may stand. The position to the left is used when the engine is to be coupled to a train having the ordinary quick-action brake. In this position, the feed-valve that is adjusted for 70 lb. is cut in and the one for 110 lb. is cut out, and the brake-pipe pressure is regulated to 70 lb. per sq. in. Coupled to a train of high-speed brakes, the handle is moved to the right position. This cuts into service the 110-lb. feed-valve.

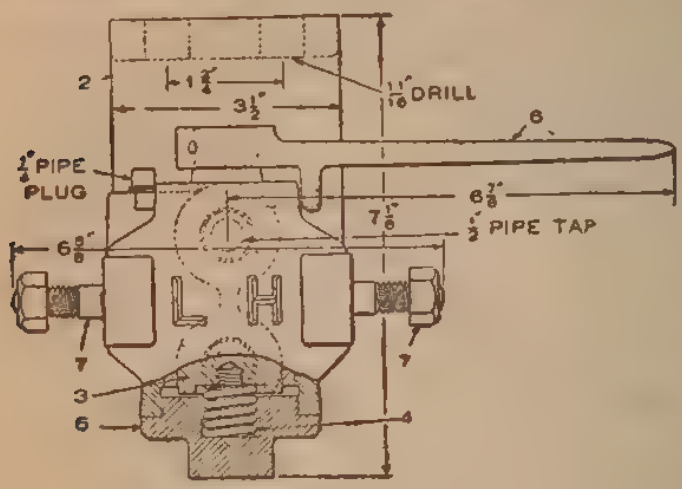

FIG. 4

TRIPLE VALVES

PLAIN TRIPLE VALVES FOR ENGINES AND TENDERS

Prior to 1903, the F-24 plain triple valve and, later, the G-24 triple were recommended for all driver-brake cylinders 10 in. or less in diameter, with or without truck brakes, the F-25 plain triple for 12-in., 14-in., and 16-in. driver brakes, with or without truck brakes, and the F-46 for high-speed brakes with all sizes of driver-brake cylinders with or without truck brake. Later, the F-46 triple was recommended for universal use for 12-in., 14-in., and 16-in. driver-brake cylinders, with or without truck brake, and the H-24 triple for all driver-brake cylinders 10-in. or less, with or without truck brake.

For both freight-engine and switch-engine tenders, the G-24 triple was supplied for use with 8-in. and 10-in. cylinders, and the F-25 triple for 12-in. cylinders.

The G-24 plain triple valve, formerly furnished for use with 8-in. and 10-in. freight- and switch-engine tender brake equipments, has been superseded by the F-1 (H-24) triple valve. The F-25 plain triple valve, formerly furnished for use with 12-in. freight- and switch-engine tender brake equipments, has been superseded by the F-2 (F-46) triple valve.

Triple valves can be distinguished by their letter and number (such as F-25, H-24, etc.) cast on the valve body.

F-1 (H-24) PLAIN TRIPLE VALVE

The F-1 (H-24) plain triple valve, shown in Fig. 1, is used with 6-in., 8-in., and 10-in. freight- and switch-engine tender brake cylinders, and with all 6-in., 8-in., and 10-in. driver- and truck-brake cylinders either with or without high-speed attachments. It is tapped for ¾-in. pipe connections and marked F-1 on the valve body; its weight is 24½ lb. The piece number of the F-1 plain triple valve, complete, is 4,233; the piece and reference numbers of the various parts are:

Pc. No.	*Ref. No.*	*Name of Part*
4,234	2	Body, bushed.
1,837	3	Cylinder cap.
1,838	4	Cap nut.
4,236	5	Piston, includes 12.
1,835	6	Slide valve.
1,809	7	Graduating valve.
1,748	8	Graduating stem.
1,811	9	Graduating spring.
1,747	10	Graduating-stem nut.
1,839	11	Cylinder-cap gasket.
10,031	12	Piston ring.
4,879	13	Bolt and nut.
1,787	14	Slide-valve spring.

F-2 (F-46) PLAIN TRIPLE VALVE

The F-2 (F-46) plain triple valve, formerly designated as the high-speed plain triple valve, Fig. 2, is now used with 12-in., 14-in., and 16-in. freight- and switch-engine tender brake cylinders; and for all 12-in., 14-in., and 16-in. driver- and truck-brake cylinders, with or without high-speed attachments. It

is tapped for ¾-in. pipe and marked F-2; its weight is 24½ lb. The piece number of the triple valve, complete, is 1,826; the piece and reference numbers of the various parts are:

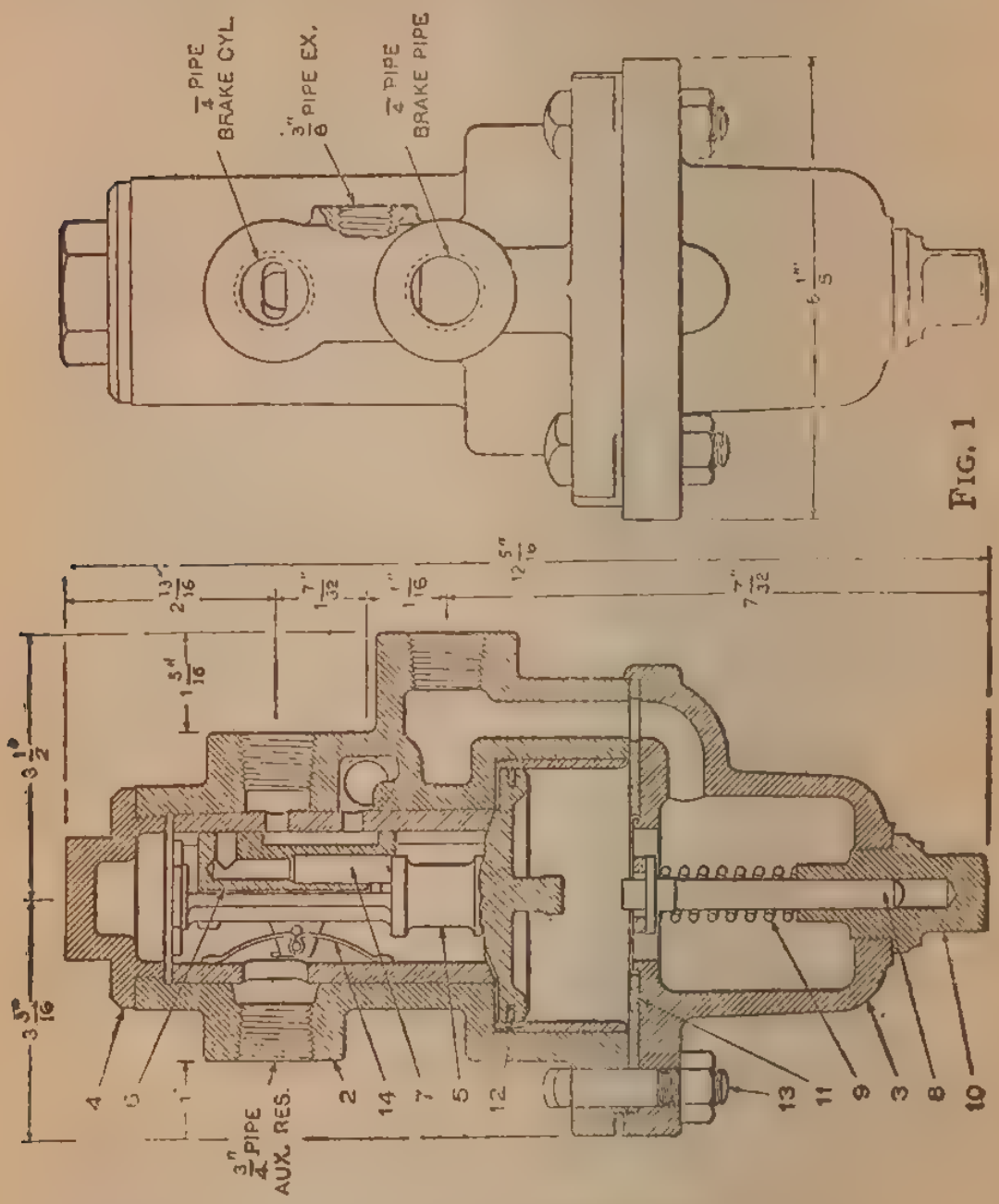

FIG. 1

Pc. No.	*Ref. No.*	*Name of Part*
1,827	2	Body, bushed.
1,837	3	Cylinder cap.
1,838	4	Cap nut.
1,832	5	Piston, includes 12.
1,835	6	Slide valve.
1,809	7	Graduating valve.
1,748	8	Graduating stem.

1,811	9	Graduating spring.
1,747	10	Graduating-stem nut.
1,839	11	Cylinder-cap gasket.
10,032	12	Piston ring.
4,879	13	Bolt and nut.
1,787	14	Slide-valve spring.

G-24 AND F-25 PLAIN TRIPLE VALVES

Pc. No. G-24	*Pc. No. F-25*	*Ref. No*	*Name of Part*
1815	1797	2	Body, bushed
1810	1810	3	Cylinder cap.
1825	1812	4	Cap nut
1820	1802	5	Piston (includes 12)
1822	1806	6	Slide valve
1732	1809	7	Graduating valve
1748	1748	8	Graduating stem
*1811	*1811	9	Graduating spring
1747	1747	10	Graduating stem nut
1813	1813	11	Cylinder cap gasket
10,030	10,030	12	Piston ring
4879	4879	13	½ in. × 2 in. tee head bolt and nut
1823	1730	14	Slide valve spring

Spring Identification of Plain Triple Valves

Triple Valve	Pc. No.	*A** In.	*B** In.	*C** In.	No. Coils	Material	Name of Spring
F-1	1,811	39/64	.083	2½	12	Phosphor-bronze	Graduating
F-2	1,811	39/64	.083	2½	12	Phosphor-bronze	Graduating
G-24	1,811	39/64	.083	2½	12	Phosphor-bronze	Graduating
G-25	1,811	39/64	.083	2½	12	Phosphor-bronze	Graduating

**A*, *B*, *C* are dimensions of spring at points indicated in cut.

FUNCTIONS OF TRIPLE VALVE

The triple valve has three duties to perform: to charge the auxiliary, to apply the brakes, and to release the brakes. When an engine is coupled to a car, air from the main reservoir flows into the brake pipe, thence through the branch

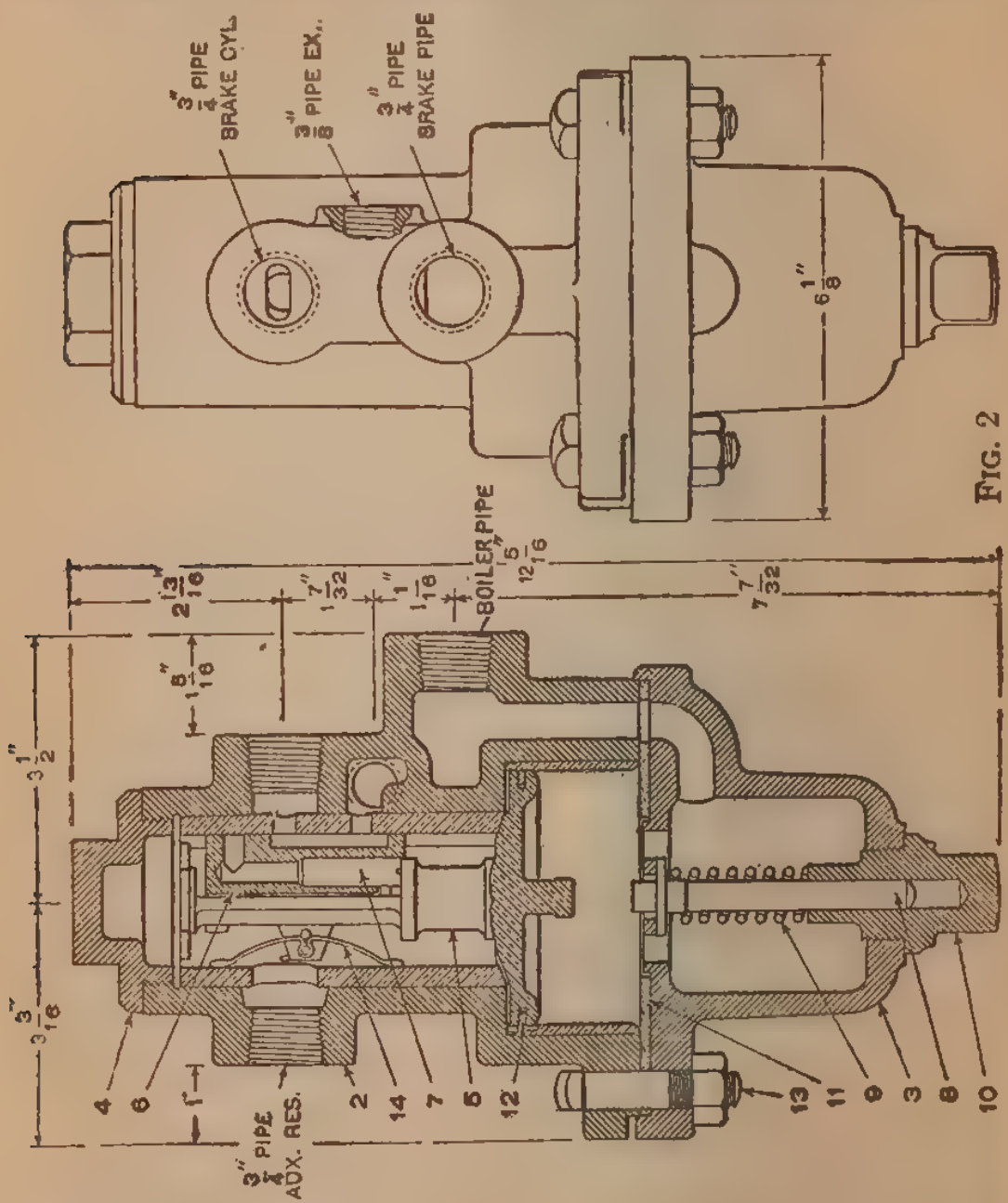

FIG. 2

pipe, into the triple valve. When the triple is cut in, the air can flow in at the brake-pipe connection, and down through a port into the chamber below piston *5*. If piston *5* were down, the air pressure *B* would force it up into release position.

This movement of the piston opens a feed-groove in the body bushing and air therefore feeds past piston *5*, through the feed-groove into the slide-valve chamber which communicates with the auxiliary reservoir. The air continues to feed past piston *5* as long as brake-pipe pressure is greater than the auxiliary pressure. The usual brake-pipe pressure is 70 lb., and when the auxiliary pressure has reached this amount, the pressures in the chambers above and below the piston are equal and the auxiliary is said to be fully charged. The lower side of piston *5* is generally referred to as the ***brake-pipe side*** and the upper as the *auxiliary side*, or the ***slide-valve side.***

Charging Auxiliary Reservoir.—A modern triple valve should charge an auxiliary from 0 to up 70 lb. in about 70 sec., with a constant train-pipe pressure of 70 lb. With the triple in release position and the auxiliary charged, there will be 70 lb. in the train pipe, 70 lb. in the auxiliary, and the atmospheric pressure in the brake cylinder, since the slide-valve cavity connects the brake cylinder with the atmosphere.

OPERATION OF PLAIN TRIPLE VALVES

Applying Brakes.—To apply brakes, it is necessary that the brake-pipe pressure be reduced below auxiliary pressure; this may be made in the usual way by the engineer, by the use of the conductor's valve, or by a break-in-two, a burst hose, or a heavy leak in the brake pipe. If the engineer makes a reduction of 7 lb. in the brake pipe, only 63 lb. will remain in the chamber below piston *5*, whereas at the beginning of the reduction there will be 70 lb. in the chamber above piston *5*. The greater auxiliary pressure will force piston *5* downwards; this closes the feed-groove and unseats the graduating valve *7*, allowing auxiliary air to enter the slide valve. By the time the graduating valve is unseated and the feed-groove closed, the shoulder on the upper end of the piston stem has engaged the slide valve and begun to move it down. As the slide valve moves down, the exhaust cavity is first closed, preventing the escape of brake-cylinder air. When the knob touches the graduating stem, the piston *5* is prevented from making any further downward movement. With the triple piston in this position, the service port of the slide valve is directly

in front of a port leading to the brake-cylinder pipe connection. This position of the valve is called the *service position.*

When the graduating valve is off its seat, there is an open communication between the auxiliary and the brake cylinder and air flows from the auxiliary into the brake cylinder, where the pressure will force out the brake piston and set the brakes. Just as long as the auxiliary pressure is greater than that in the brake pipe, so long will piston *5* be held down and the graduating valve remain unseated; but the auxiliary pressure gradually expands into the brake cylinder, until the pressure in the lower chamber is sufficiently greater than that in the upper chamber to overcome the small friction of the packing ring *6* and cause piston *5* to be moved upwards and seat the graduating valve. The pressure on the brake-pipe side of the piston *5* still slightly exceeds that in the auxiliary, but not to such an extent as to overcome the additional friction encountered in moving the slide valve *3*; the piston therefore stops as soon as the graduating valve has been seated. This is called the *lap position* of the triple valve. In this position all ports are blanked. The brakes are now partly set; a further brake-pipe reduction will be necessary to apply them harder.

If another 5-lb. brake-pipe reduction is made, the greater auxiliary pressure again forces down the piston, but in this case the slide valve is already in service position, and it is only necessary to move the piston sufficiently to unseat the graduating valve. This is accomplished by the time the knob touches the graduating stem *8*; and once more, by means of the service port of the slide valve, communication is established between the auxiliary and the brake cylinder. The graduating valve is again seated automatically by the piston *5* when the auxiliary pressure becomes a little less than that in the brake pipe.

After the slide valve has once been moved down, it remains in service position until the brakes are released. Each reduction of brake-pipe pressure causes the brake to set harder, and these reductions may be continued just as long as the pressure in the auxiliary is greater than that in the brake cylinder. When these pressures become equalized, the brake is fully set, and a further brake-pipe reduction will be a waste

of brake-pipe air. Ordinarily, a brake-pipe reduction of about 20 lb. will cause a full application of the brakes.

Releasing Brakes.—To release brakes, either the brake-pipe pressure must be increased above auxiliary pressure, or auxiliary pressure must be reduced below brake-pipe pressure. The usual method is for the engineer to allow the air stored in the main reservoir to feed quickly into the brake pipe. When the pressure on the brake-pipe side of piston *5* is sufficient to overcome auxiliary pressure and the friction of the working parts, the piston is forced upwards to release position, carrying the graduating and slide valves with it. In this position, the feed-groove is opened, and air from the brake pipe feeds through to recharge the auxiliary. At the same time, the pressure in the brake cylinder escapes through the exhaust port into the atmosphere.

Emergency Application.—To apply brakes in an emergency, it is necessary to make a sudden and heavy brake-pipe reduction. This sudden reduction causes piston *5* to move down very quickly and, compressing the graduating spring, to traverse the full length of its stroke. In this position, a direct connection is established between the auxiliary and brake cylinder across the upper end of the slide valve. Auxiliary air passes direct into the brake cylinder without having first to pass through the service ports of the slide valve. As the large ports are used only in emergency position, they allow the pressure in the auxiliary and brake cylinder to equalize more quickly than do the smaller ports used in the service position. With a plain triple, the brake sets more quickly in emergency than in service, but not with greater force. To get the full emergency action of the brakes with plain triple valves, it is necessary to make a sudden reduction of over 20 lb. in train-pipe pressure. After an emergency application, the release of the brakes is accomplished in the same way as after a service application.

FREIGHT-BRAKE TRIPLE VALVES

DEVELOPMENT OF FREIGHT TRIPLE VALVE

The original idea of providing a system of brakes that could be applied to all the cars of a train and be under the direct control of the engineer was suggested to George H. Westinghouse in 1866 by a collision between two freight trains. In its beginning, therefore, the brake was regarded merely as a safety device and as such it was brought into use and developed.

The first air brake, namely, the *straight-air brake*, was applied to a train consisting of a locomotive and four cars. On the first run of this train, the engineer, by a prompt application of the brakes, prevented what would likely have been a serious accident had the train been equipped with any other brake then in existence, thus demonstrating the value of the air brake as a safety device. The control of the train equipped with the straight-air brake was so superior to the control that could be obtained by means of any other brake then in use that the idea of using the brake to control a train made up of more than four cars suggested itself. Accordingly, in September, 1869, a six-car Pennsylvania Railroad train was equipped with the air brake, and in November of the same year a ten-car train was thus equipped. As the brake in most general use at that time was a cumbersome chain brake applicable to only four- or five-car trains, the success of the air brake in handling ten-car trains at once made it valuable as a dividend earner. The earning power of the air brake consisted in its ability to handle longer and heavier trains at higher safe speeds than was possible with other brakes then in existence.

The adoption of the straight-air brake by a number of the leading railroads, on which it was pressed into general service, eventually brought out the serious defects of the air brake and made a further development of it necessary. This resulted, in 1872, in the invention of the *plain automatic brake*, the triple valve of which made possible the automatic brake of the present day.

The automatic brake was developed during the years 1872 and 1873, and it was so superior to all other forms of brake that it was adopted as the standard for passenger-train service. Up to that time no power brake was in use in freight service, and the attempts to increase the length of freight trains led to numerous accidents and break-in-twos, caused chiefly by lack of proper train control. These accidents led to the belief that the automatic brake could be successfully used in handling long freight trains. To find out whether or not this could be done, the Westinghouse Air Brake Company, in 1882, fitted up a fifty-car train with the plain automatic air brake and took it over the Alleghany Mountains. Tests made on this trial trip clearly demonstrated that the braking power of this type of brake was sufficient to control the speed of the train even on the heaviest grades.

The success of the automatic air brake brought several competitive brake systems into the field, and in 1885 the Master Car Builders' Association appointed a committee to investigate the relative merits of these brake systems as well as to report on the feasibility of controlling a fifty-car freight train by means of a continuous power brake, a point much in controversy at that time. A series of tests with fifty-car trains, known as the "Burlington tests," was begun in 1886 and completed in 1887. The Westinghouse brake and three others were entered in these tests, which clearly demonstrated that none of the brake systems could be successfully used in every-day service on trains of fifty cars. The Westinghouse brake worked satisfactorily in service applications, but in applying it in emergency the interval between the application of the brake on the first car and the last car was so long that the shock caused by the rear cars running into the front cars was terrific.

This necessitated a modification of the plain triple valve for fifty-car freight-train service. Accordingly, in 1887, the quick-action triple valve was brought out. This triple was applied to the fifty-car train, which had been left at Burlington. Tests were made to try out the triples and they were found to be so satisfactory by the railway officials and by the persons conducting the tests that the train was sent on

a tour through the Middle West and the East. This tour established the *quick-action brake* as the standard for both freight and passenger service.

As will be noted, the straight-air brake and the plain triple valve were developed for passenger service, whereas the quick-action triple valve was developed for freight service, although eventually it was adopted as standard for both freight and passenger service, also, the quick-action triple was designed and developed for use on trains of fifty cars or less, the fifty-car train to be the maximum. From the very beginning, the length, weight, and speed of trains have been limited by the capacity of the brake for the safe and efficient control of the train. The hauling power of the locomotive has always been a step or two in advance of the brake control; consequently, when the length of the train was limited to fifty cars by the brake control, the tonnage of the train was increased to the hauling power of the locomotive by increasing the capacity of the cars. As the capacity of the cars increased, the braking power on the car was necessarily increased in proportion, as was also the hauling power of the locomotive.

The desire to haul trains of more than fifty cars led to the "part-air train" practice, which consisted in using a sufficient number of the head-end brakes to control the train, the rear-car brakes not being used. This practice was quite successful, and under it the length of the train gradually increased from fifty to eighty and ninety cars. As fifty or fewer than fifty brakes were in use on such trains, the brake system operated without difficulty and engineers soon learned to control the slack of the non-air cars so as to prevent severe shocks and break-in-twos.

Next came the rule to increase the percentage of air-braked cars from time to time, until now it is customary to run all-air trains. As sixty- to eighty-car trains have become a fixed practice, and one-hundred-car trains are not uncommon, the air-brake manufacturers have been kept busy experimenting and improving their apparatus in the endeavor to keep the brake up to the requirements of the service. To control an all-air train of eighty to one hundred cars by means of the

brake is a vastly different proposition from controlling an eighty-car part-air train. The length as well as the volume of the brake pipe is practically twice that of the original fifty-car train. Therefore, the difficulty experienced in 1887 in emergency applications with the plain automatic brake is now experienced in service applications of the automatic brake; that is, the interval between the application of the brake on the first car and that on the last car is so great in service applications that if a heavy reduction is made without taking due precautions a terrific shock will be caused by the rear cars running in the amount of the slack and colliding with the front cars held by a good application of the brake. In addition, the recoil of the rear cars after the shock, aided by the action of the compressed springs and the application of the brake taking hold on them, tends to snap the train in two. Another serious difficulty, due to the increased brake-pipe volume (which is twice as great as with a fifty-car train) and to the increased back flow of air into the brake pipe from the auxiliaries, due in turn to the slower reduction, is that the time necessary to make a given brake-pipe reduction is doubled. This makes the time of application twice as long, which makes the application of the rear brakes more uncertain and very materially lengthens the distance required to make a stop. Every second lost at high speed in getting the brake fully applied adds many feet to the length of the stop.

In releasing brakes, the interval between the release of the first brake and the last brake is so great that the brakes on a good portion of the train release and the slack runs out before the brakes on the rear portion release, tending to break the train in two. Also, the brake is slow in releasing, and the rear brakes are especially slow on account of the increased brake-pipe volume to be discharged and the increased size of the auxiliary reservoirs of the large capacity cars that are taking air from the brake pipe during recharge. As the brakes are slow in applying and releasing, both the danger and the time of making a stop and a start are increased.

The difficulty of brake control increased with the length of the train above the limit of fifty cars. However, the brake manufacturers, profiting by their experience, foresaw

the difficulties ahead and bent their energies to improve the brake apparatus so that it would correct the defects of the quick-action brake. Their efforts were along the lines of a

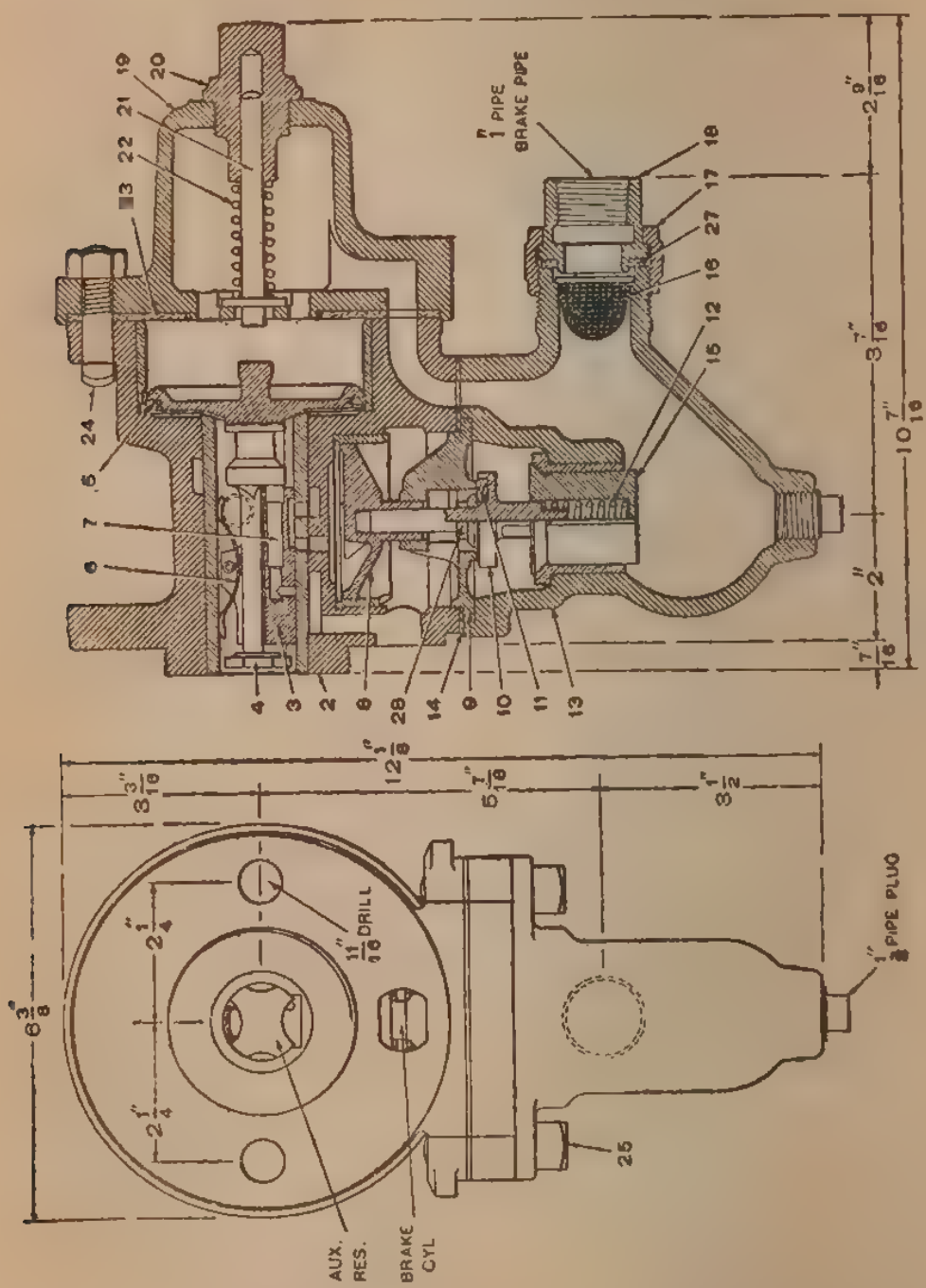

FIG. 1

uniform application and a uniform release and recharge of all brakes, for if that object could be attained the brake would safely and efficiently control trains of any practical length. The

result of the experiments and tests conducted resulted in an improved type of freight triple valve called the *type K triple valve.*

H-1 (F-36), QUICK-ACTION, FREIGHT, TRIPLE VALVE

The H-1 (F-36), quick-action, freight, triple valve, shown in Fig. 1, was used with 6-in. and 8-in. freight-car brake cylinders and 8-in. passenger-tender brake cylinders, but it has been quite generally superseded by the K-1 quick-action, quick-service, uniform-release, and uniform-recharge freight triple valve, which is regarded as standard for this service. It weighed 38 lb. Though similar in appearance, this valve differs essentially from other quick-action triple valves, and should never be used except as specified. In addition to being marked H-1 on the valve body, it may be distinguished from the passenger triple valves, type P, by the fact that it has two exhaust outlets (one of which is plugged) and from the H-2, 10-in., freight, triple valve in having two instead of three bolt holes in the back flange. The bore of the H-1 slide-valve bush is 1¼ in. in diameter. The piece number of the H-1 triple valve, complete, is 1,717, the piece and reference numbers of the various parts are given in the accompanying list.

Pc. No.	*Ref. No.*	*Name of Part*
20,220	2	Body, complete, includes ⅜-in. pipe plug.
1,729	3	Slide valve.
1,725	4	Main piston, includes 5.
10,032	5	Main-piston ring.
1,730	6	Slide-valve spring.
1,732	7	Graduating valve.
1,733	8	Emergency piston.
1,740	9	Emergency-valve seat.
1,735	10	Emergency valve, includes 11 and 28.
1,737	11	Rubber seat.
1,745	12	Check-valve spring.
12,850	13	Check-valve case, complete, includes ½-in. pipe plug.
1,754	14	Check-valve-case gasket.
1,744	15	Check-valve.
1,751	16	Strainer.
1,749	17	1-in. union nut.
1,750	18	1-in. union swivel.
1,746	19	Cylinder cap.

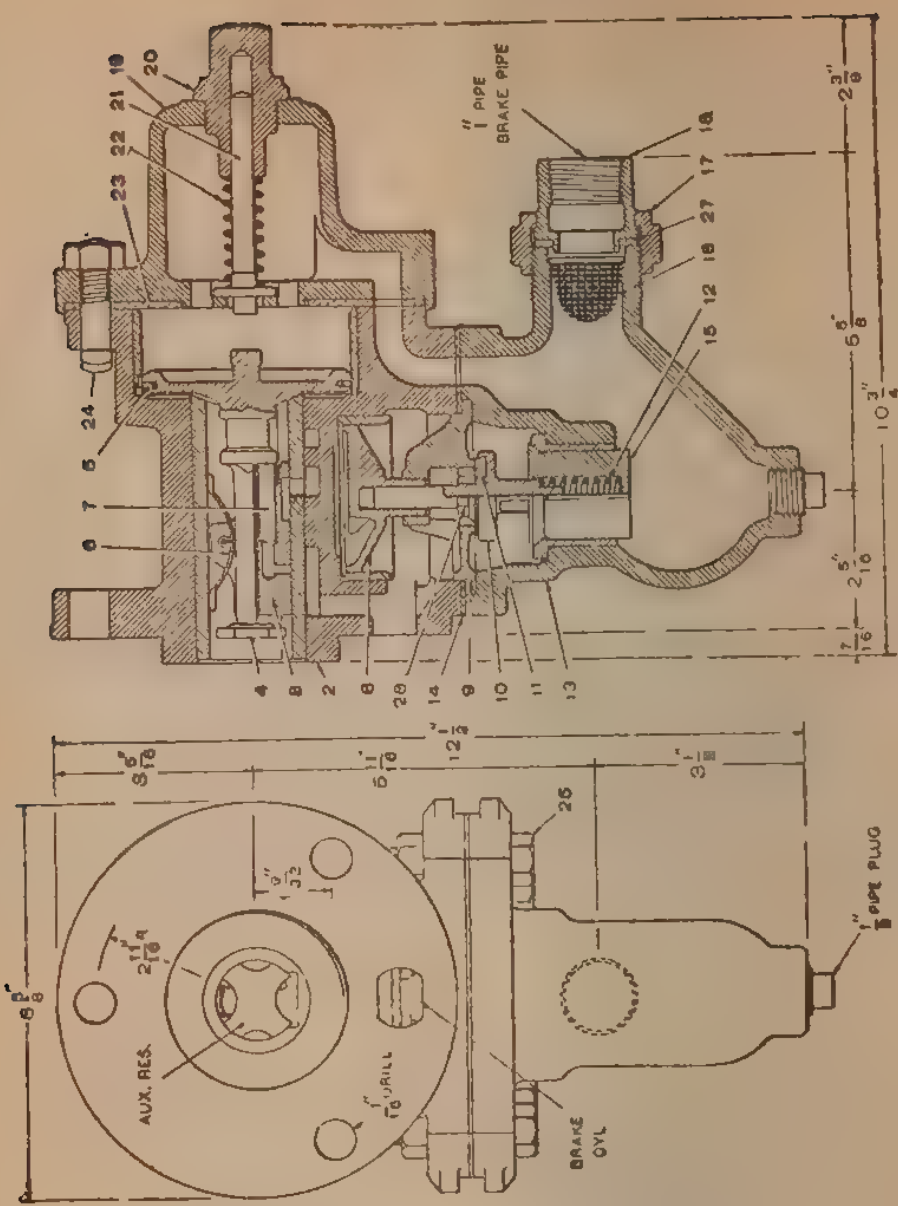

FIG. 2

Pc. No.	Ref. No.	Name of Part
1,747	20	Graduating-stem nut.
1,748	21	Graduating stem.
1,057	22	Graduating spring.
1,753	23	Cylinder-cap gasket.
10,863	24	$\frac{1}{2}'' \times 1\frac{7}{8}''$ T-head bolt and nut.
1,752	25	$\frac{1}{2}'' \times 1\frac{3}{4}''$ square-head capscrew.
1,004		$\frac{1}{8}$-in. pipe plug.
1,755	27	Union gasket.
1,738	28	Emergency-valve nut.
1,734		$\frac{3}{8}$-in. plug for exhaust outlet, not shown.
2,427		Triple-valve gasket

H-2 (H-49) QUICK-ACTION FREIGHT TRIPLE VALVE

The H-2 (H-49) quick-action freight triple valve, shown in Fig. 2, was used with 10-in. freight-car brake cylinders only; it weighed 44 lb. It has been quite generally superseded by the K-2 quick-action, quick-service, uniform-release and uniform-recharge freight triple valve, which is regarded as standard for this service. Though similar in appearance, this valve differs essentially from other quick-action triple valves, and should never be used except as specified. In addition to being marked H-2 on the valve body, it may be distinguished from the passenger triple valves, type P, by the fact that it has two exhaust outlets (one of which is plugged) and from the H-1 8-in. freight triple valve in having three instead of two bolt holes in the back flange. The bore of its slide-valve bush is $1\frac{3}{8}$ in. Fig. 3 shows two perspective views of the slide valve *3*. In ordering slide valve or graduating valve for the H-2 freight triple valve, the order should state clearly whether old- or new-style parts are desired, because these are not interchangeable. The new-style (present standard) slide valve, Piece No. 29,138, has straight drill through longitudinal center line of slide valve, for the new (present standard) $\frac{5}{16}$-in. graduating valve, Piece No. 29,139. The old-style slide valve Piece No. 1,769, has $\frac{1}{4}$-in. drill with counterbore. The graduating valves may be distinguished by the difference in diameter and the fact that the old style has a shoulder.

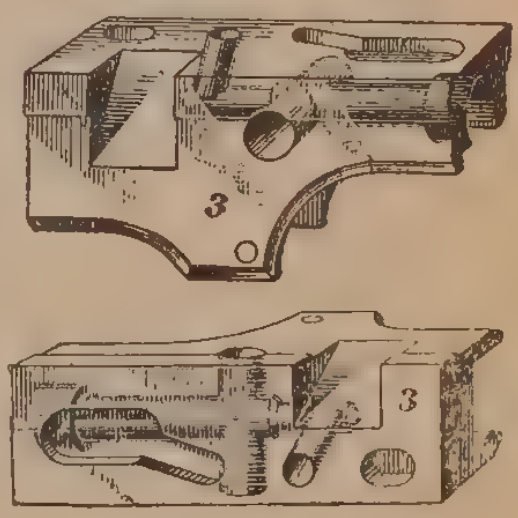

FIG. 3

The piece number of the H-2 triple valve, complete, is 4,870.

Pc. No.	*Ref. No.*	*Name of Part*
20,216	2	Body, complete, includes $\frac{3}{8}$-in. pipe plug.
29,138	3	Slide valve.
1,767	4	Main piston, includes 5.
10,032	5	Main-piston ring.
1,730	6	Slide-valve spring.

Pc. No.	*Ref. No.*	*Name of Part*
29,139	7	Graduating valve.
1,733	8	Emergency piston.
1,740	9	Emergency-valve seat.
1,735	10	Emergency valve, includes 11 and 28.
1,737	11	Rubber seat.
1,745	12	Check-valve spring.
13,392	13	Check-valve case, with ½-in. pipe plug.
4,876	14	Check-valve-case gasket.
1,744	15	Check-valve.
1,751	16	Strainer.
1,749	17	1-in. union nut.
1,750	18	1-in. union swivel.
1,746	19	Cylinder cap.
1,747	20	Graduating-stem nut.
1,748	21	Graduating stem.
1,057	22	Graduating spring.
1,753	23	Cylinder-cap gasket.
10,836	24	Bolt and nut, for cylinder cap.
4,880	25	Bolt and nut, for check-valve case.
1,004		½-in. pipe plug.
1,755	27	1-in. union gasket.
1,738	28	Emergency-valve nut.
1,734		⅜-in. plug for exhaust outlet, not shown.

For old-style slide valve or graduating valve specify:

Pc. No.	*Ref. No.*	*Name of Part*
1,769	3	Slide valve.
1,732	7	Graduating valve.

These parts are not interchangeable with the standard parts. The new-style slide valve, Piece No. 29,138, has a straight drill through the longitudinal center line of the slide valve for the new $\frac{5}{16}$-in. graduating valve, Piece No. 29,139. The old-style slide valve, Piece No. 1,769, has ¼-in. drill with counterbore. The graduating valves differ in diameter, and the old-style valve has a shoulder.

Spring Identification of Type H Quick-Action Triple Valves

Triple Valve	Pc. No.	*A** In.	*B** In.	*C** In.	No. Coils	Material	Name of Spring
H-1	1,745	$\frac{33}{64}$	.072	1¾	11	Brass	Check-Valve
H-2	1,057	$\frac{9}{16}$	.059	2¾	16	Nickeled Steel	Graduating

**A*, *B*, *C* are dimensions of spring at points indicated in cut.

OPERATION OF QUICK-ACTION TRIPLE

The quick-action triple contains two distinct sets of mechanism. One of these, consisting of the triple piston *4* with stem, slide valve *3*, and graduating valve *7* with graduating stem *21* and graduating spring *22*, is used in making service stops and in releasing brakes; it is often called the service part of the triple. The other set, consisting of the emergency piston *8*, emergency valve *10*, and brake-pipe check-valve *15*, is only brought into use in an emergency application of the brakes; hence, it is often called the emergency or quick-action part of the triple.

Release Position.—The operation of the quick-action triple in released position is the same as that of the plain triple. The slide valve of the quick-action triple is shown in release position in the figures. In this position, any air that may be in the brake cylinder can pass through the slide valve, out through the exhaust port to the atmosphere, thus releasing the brake. At the same time, brake-pipe air can pass the main piston *4* through the feed-groove, thus recharging the auxiliary reservoir.

Service Position.—The operation of the quick-action triple in service application is the same as that of the plain triple. When a service application of the brakes is made, the triple piston *4* moves out until the knob touches the graduating stem, after which any further movement is prevented. The exhaust port closes first, and the service port and graduating port of the slide valve connect with the brake cylinder by way of the brake-cylinder port. As the graduating valve *7* opens before the slide valve moves forwards, air passes from the auxiliary reservoir through this graduating port to the brake cylinder until auxiliary pressure is reduced just a trifle below brake-pipe pressure, when the triple piston moves to lap position and the graduating valve *7* is closed. During succeeding reductions, the graduating valve simply opens and closes without moving the slide valve, as in the plain triple.

EMERGENCY PART OF TRIPLE

When, in cases of danger, etc., a sudden reduction of brake-pipe pressure is made, the emergency part of the triple valve is called into play; the triple piston *4* moves out quickly, the graduating spring *22* is compressed, and the triple piston travels the full length of its stroke. In this position, auxiliary pressure can pass into the brake cylinder. The removed corner of the slide valve has reached a position directly above a port leading to the chamber above the emergency piston, thus allowing axuiliary air to pass down on to the top of the emergency piston *8*, forcing it downwards. This downward movement unseats the emergency valve *10*, and allows the air in the chamber above the emergency check *15* to escape. Brake-pipe pressure beneath this check-valve forces the latter from its seat and air from the brake pipe passes up by it through the unseated emergency valve *10*, into the brake cylinder. The emergency valve remains unseated until the pressures above and below piston *8* are nearly equalized, when the spring *12* forces the emergency valve to its seat.

The position of the removed corner *q* on the slide valve is such that, as the valve moves forwards to emergency position, it connects the port leading to the chamber above the emergency piston with auxiliary pressure before the emergency port in the slide-valve port connects with the port leading to the brake cylinder. The emergency valves therefore open first, consequently, brake-pipe air—which passes like a flash through the large openings of the emergency valves—is admitted in sufficient quantity to give a pressure in an 8-in. brake cylinder, with standard piston travel of about 24½ lb, when check-valve *15* closes. Afterwards, auxiliary pressure discharges into, and equalizes with, the brake cylinder; but, as the cylinder already contains about 24½ lb. pressure, they equalize at about 60 lb. pressure instead of at 50 lb., as in a service application.

The opening through the emergency port of the slide valve is made smaller than the service port, to retard the flow of air somewhat from the auxiliary reservoir to the brake cylinder during an emergency application of the brakes, so as to allow as much air as possible to enter the brake cylinder from the brake pipe, and thus increase the final brake-cylinder pressure.

COMPARISON OF PLAIN AND QUICK-ACTION TRIPLES

Plain and quick-action triples work exactly the same in a service application, but in emergency the quick-action triple sets the brake quicker and gives a greater brake-cylinder pressure. Also, the quick-action triple sets its brake harder in emergency than it does in service application, owing to the emergency valve, piston, and check-valve operating so as to allow brake-pipe pressure to enter the brake cylinder and aid the auxiliary pressure in applying the brake. The plain triple sets its brake quicker in emergency than it does in service, owing to the use of larger ports; but the brake does not set any harder, because it simply has auxiliary pressure to use in applying the brakes in either service or emergency.

When a quick-action triple goes into emergency position, a sudden brake-pipe reduction is made near it when the emergency valve opens. This sudden reduction starts the next quick-action triple, and that starts the next, and so on throughout the train. If from any defect one triple goes into quick action, all will follow.

Ordinarily, a gradual brake-pipe reduction of about 20 lb. will cause a plain or a quick-action triple valve to equalize the pressures between the auxiliary and brake cylinders at about 50 lb. In emergency, with a quick-action triple, the pressures are equalized at about 60 lb., while with a plain triple, the same pressure is obtained in the cylinder in emergency as in a full-service application, namely, 50 lb. With quick-action triples, a sudden brake-pipe reduction of 10 or 12 lb. will produce a full emergency action of the brakes; while, with a plain triple, a reduction of about 20 lb. is necessary. The reason for this is that a 12-lb. reduction will cause the emergency valves of the first triples to open and produce a further brake-pipe reduction. Brake-pipe pressure is not affected in this way when a plain triple goes into emergency, and, therefore, while a sudden 12 lb. reduction would force the triple to emergency position, it would not stay there, as it would be forced back to lap or perhaps to release, as soon as auxiliary pressure had reduced the 12 lb. It is necessary, therefore, to reduce brake-pipe pressure below that at which

the auxiliary and brake cylinders equalize, to obtain a full emergency application with plain triples.

K-1 TRIPLE VALVE

The K-1 triple valve, shown in Fig. 4, is used with 6-in. and 8-in. freight-car brake cylinders; its weight is 40 lb. The piece number of the valve, complete, is 27,852; the piece and reference numbers of its parts are as follows:

Pc. No.	*Ref. No.*	*Name of Part*
27,851	2	Body, complete, includes ⅜-in. pipe plug.
12,513	3	Slide valve.
12,852	4	Main piston, includes 5.
10,032	5	Main-piston ring.
6,520	6	Slide-valve spring.
12,514	7	Graduating valve.
1,733	8	Emergency piston.
1,740	9	Emergency-valve seat.
1,735	10	Emergency valve, includes 11 and 28.
1,737	11	Rubber seat.
1,745	12	Check-valve spring.
12,850	13	Check-valve case, complete includes ½-in. pipe plug.
1,754	14	Check-valve-case gasket.
1,744	15	Check-valve.
1,751	16	Strainer.
1,749	17	1-in. union nut.
1,750	18	1-in. union swivel.
1,746	19	Cylinder cap.
1,747	20	Graduating-stem nut.
1,748	21	Graduating stem.
1,057	22	Graduating spring.
1,753	23	Cylinder-cap gasket.
10,836	24	Bolt and nut, for cylinder cap.
1,752	25	Capscrew.
1,004		½-in. pipe plug.
1,755	27	1-in. union gasket.
1,738	28	Emergency-valve nut.
27,328	29	Retarding-device body, marked K-1.
27,846	31	Retarding stem.
29,105	33	Retarding spring.
9,862	35	Graduating-valve spring.
1,734		⅜-in. plug for exhaust outlet, not shown.
2,427		*Triple-valve gasket.

The standard retarded-release portion of the K-1 triple valve, illustrated in Fig. 4 and 5 (*b*), is not interchangeable with the

*Listed for convenience only; not included in K-1 triple valve.

retarded-release portion supplied with the old-standard K-1 triple valve, Piece No. 20,319, illustrated in Fig. 5 (*a*); therefore, the following piece numbers, covering the retarded-

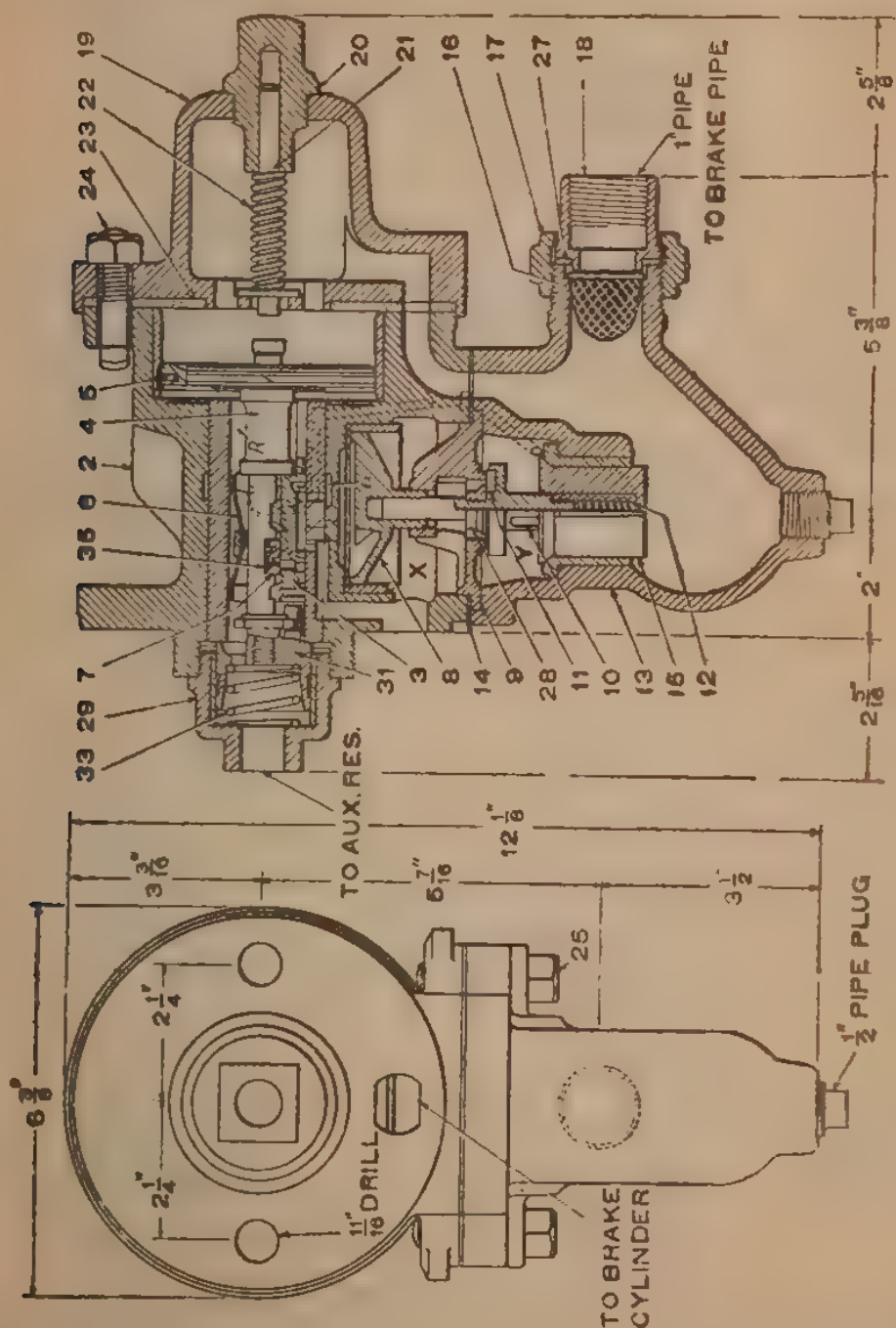

FIG. 4

release portion, must be specified when ordering repair parts for old-standard triple valve, Piece No. 20,319, otherwise all repair parts for both triple valves are identical

Pc. No.	*Ref. No.*	*Name of Part*
10,498		Release-retarding device, complete, includes 29 to 34 inclusive.
20,278	2	Triple-valve body, complete, includes $\frac{3}{8}$-in. pipe plug.
10,511	29	Retarding-device body.
18,581	30	Retarding-device screw.
10,510	31	Retarding stem.
9,919	32	Retarding-spring collar.
1,523	33	Retarding spring.
10,068	34	Retarding-stem pin.

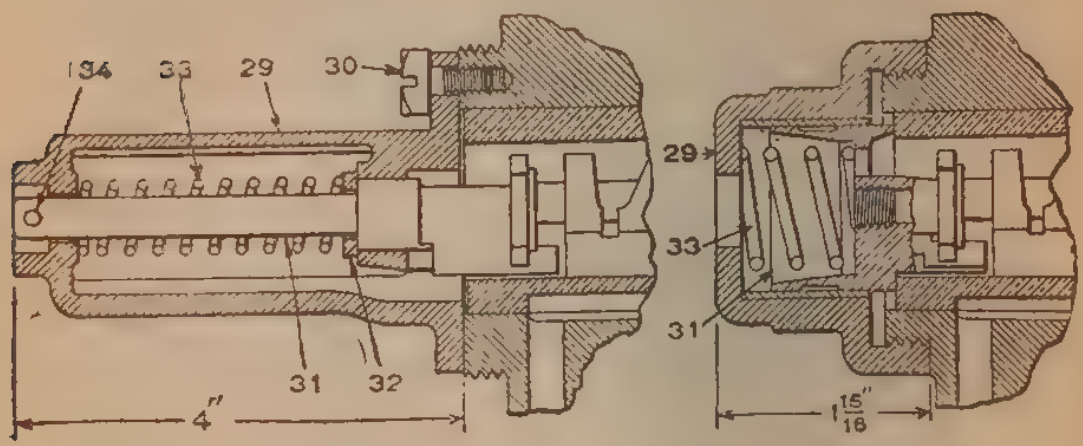

(*a*) FIG. 5 (*b*)

When the old-standard H-1 triple valve, Piece No. 1,717, is converted to the K-1, Piece No. 28,991, a special retarded-release portion, as illustrated in Fig. 5 (*b*), is supplied; therefore, the following piece numbers, covering the retarded-release portion, must be specified when ordering repair parts for converted triple valve, Piece No. 28,991, otherwise all repair parts for both triple valves are identical.

Pc. No.	*Ref. No.*	*Name of Part*
29,001	2	Triple-valve body, complete, includes $\frac{3}{8}$-in. pipe plug.
27,325	29	Retarding-device body, marked K-1-C.
28,944	31	Retarding stem.

K-2 TRIPLE VALVE

The K-2 triple valve, shown in Fig. 6, is used with 10-in. freight-car brake cylinders; it weighs 45 lb. Its piece number is 28,968; the piece and reference numbers of its various parts are given in the accompanying list.

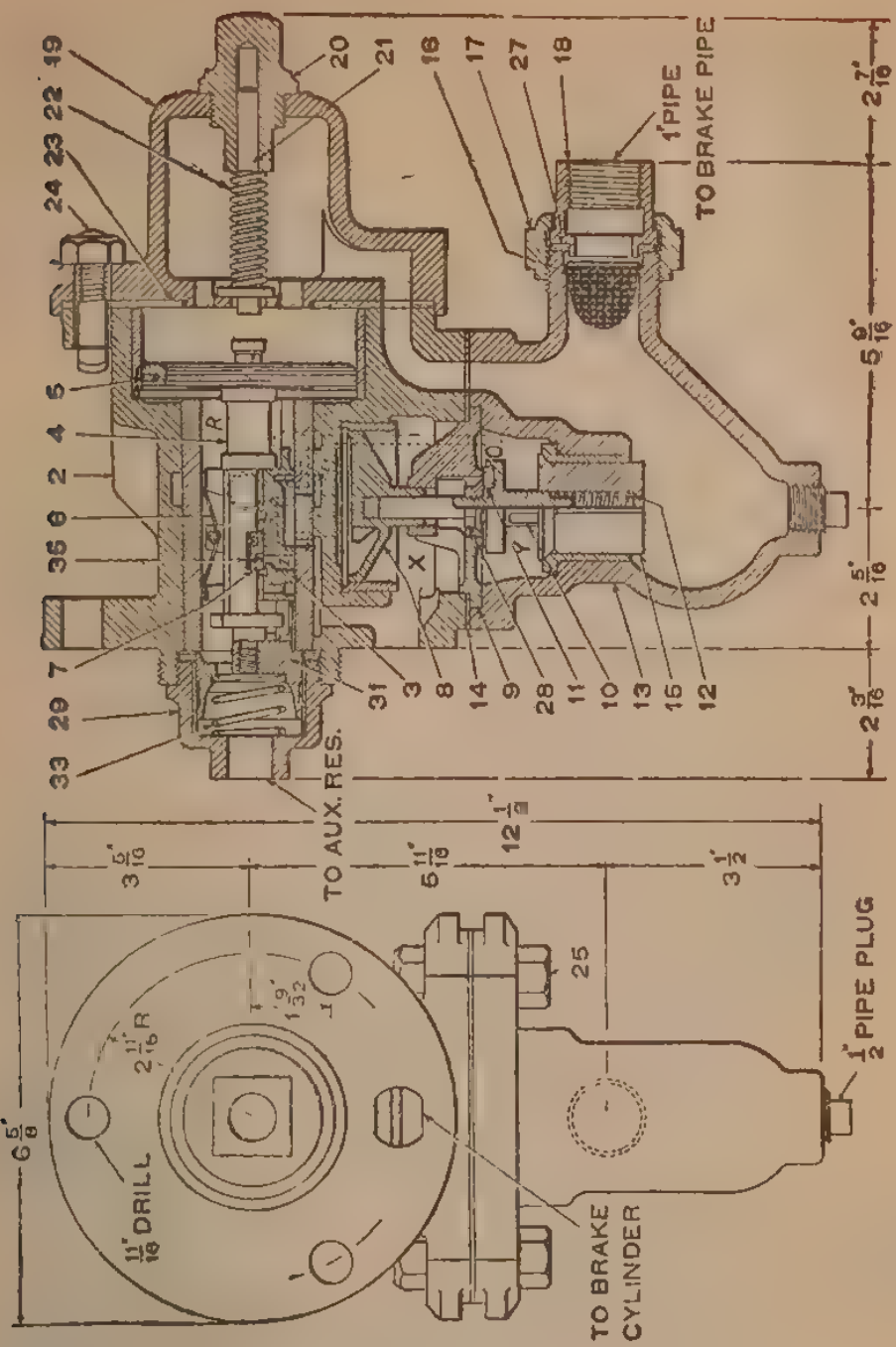

FIG. 6

Pc. No.	*Ref. No.*	*Name of Part*
28,888	2	Body, complete, includes ⅜-in. pipe plug.
28,959	3	Slide valve.
12,864	4	Main piston, includes 5.
10,032	5	Main-piston ring.
6,520	6	Slide-valve spring.
28,956	7	Graduating valve.
1,733	8	Emergency piston.
1,740	9	Emergency-valve seat.

Pc. No.	Ref. No.	Name of Part
1,735	10	Emergency valve, includes 11 and 28.
1,737	11	Rubber seat.
1,745	12	Check-valve spring.
13,392	13	Check-valve case, complete, includes ½-in. pipe plug.
4,876	14	Check-valve-case gasket.
1,744	15	Check-valve.
1,751	16	Strainer.
1,749	17	1-in. union nut.
1,750	18	1-in. union swivel.
1,746	19	Cylinder cap.
1,747	20	Graduating-stem nut.
1,748	21	Graduating stem.
1,057	22	Graduating spring.
1,753	23	Cylinder-cap gasket.
10,836	24	Bolt and nut, for cylinder cap.
4,880	25	Bolt and nut, for check-valve case.
1,004		½-in. pipe plug.
1,755	27	1-in. union gasket.
1,738	28	Emergency-valve nut.
27,334	29	Retarding-device body, marked K-2.
28,613	31	Retarding stem.
29,105	33	Retarding spring.
31,528	35	Graduating-valve spring.
1,734		⅜-in. plug for exhaust outlet, not shown.
4,886		*Triple-valve gasket.

The present standard retarded-release portion of the K-2 triple valve, illustrated in Fig. 6, is not interchangeable with the retarded-release portion supplied with the old-standard K-2 triple

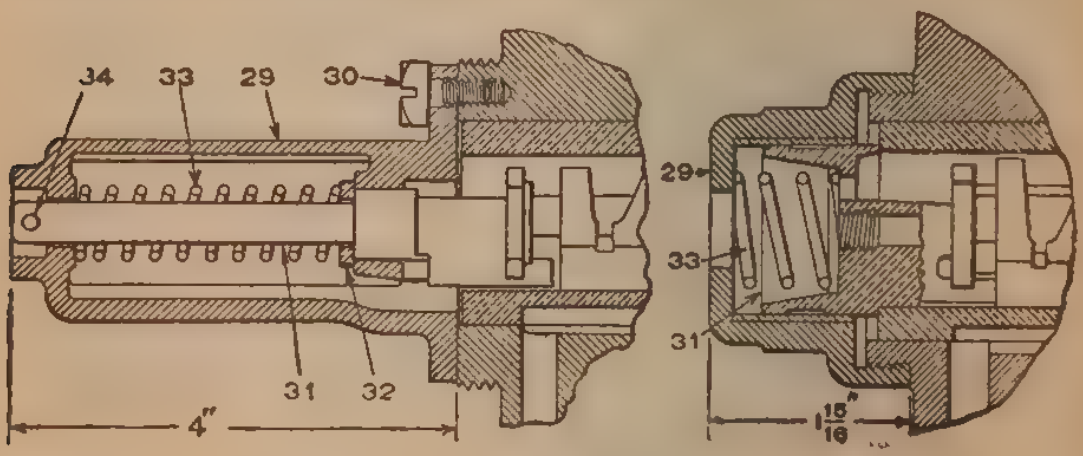

(*a*) FIG. 7 (*b*)

valve, Piece No. 20,230, illustrated in Fig. 7 (*a*), therefore the following piece numbers, covering the retarded-release

*Listed for convenience only; not included in K-2 triple valve.

portion, must be specified when ordering repair parts for the old-standard triple valve, Piece No. 20,230, otherwise all repair parts for both triple valves are identical.

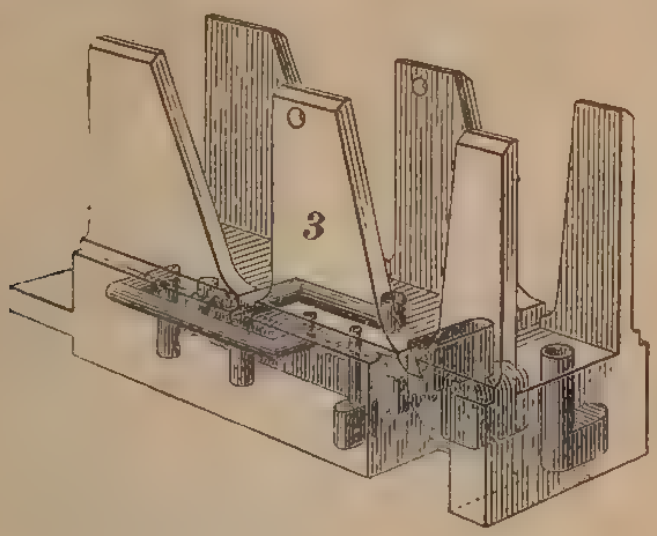

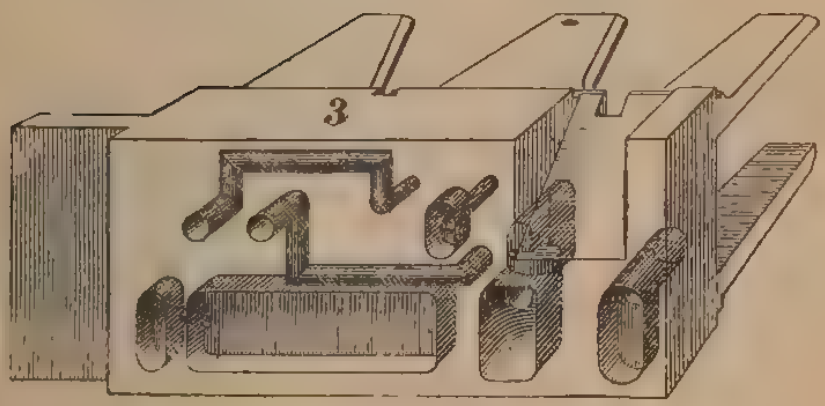

FIG. 8

Pc. No.	*Ref. No.*	*Name of Part*
10,563		Release-retarding device, complete, includes 29 to 34 inclusive.
20,148	2	Triple-valve body, complete, includes $\frac{3}{8}$-in. pipe plug.
10,561	29	Retarding-device body.
18,581	30	Retarding-device screw.
10,081	31	Retarding stem.
9,919	32	Retarding-spring collar.
1,523	33	Retarding spring.
10,068	34	Retarding-stem pin.

When the old-standard H-2 triple valve, Piece No. 4,870, is converted to the K-2, Piece No. 29,191, a special retarded

release portion, Fig. 7 (*b*), is supplied; therefore, the following piece numbers, covering the retarded-release portion, must be specified when ordering repair parts for converted triples.

Pc. No.	*Ref. No.*	*Name of Part*
29,206	2	Triple-valve body, complete.
27,331	29	Retarding-device body, marked K-2-C.
28,942	**31**	**Retarding stem.**

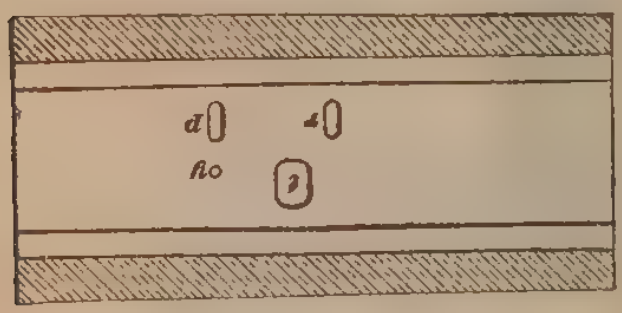

FIG. 9

FIG. 10

Fig. 8 shows two perspective views of the slide valve *3*, and Fig. 9, the slide-valve seat; Fig. 10 shows the graduating valve *7*.

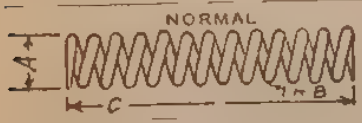

Spring Identification of K-1 and K-2 Triple Valves

Triple Valve	Pc. No.	*A** In.	*B** In.	*C** In.	No. Cls.	Material	Name of Spring
K-1 & K-2	1,745	$\frac{33}{64}$	.072	$1\frac{3}{4}$	11	Brass	Check-valve
K-1 & K-2	1,057	$\frac{9}{16}$	.059	$2\frac{3}{4}$	16	Nickeled Steel	Graduating
K-1 & K-2	29,105	$1\frac{3}{16}$	.092	$1\frac{9}{32}$	4	Nickeled Steel	Retarded Release Device
K-1 & K-2 Old Standard	1,523	$\frac{33}{64}$	.080	$2\frac{5}{8}$	$13\frac{1}{2}$	Nickeled Steel	Retarded Release Device

*A, *B*, *C* are dimensions of spring at points indicated in cut.

FEATURES OF TYPE K TRIPLE VALVE

The type K freight triple valve is used only in freight service and was designed to meet the conditions brought about by the increase in train speeds, in length of trains and in car capacities that obtain at the present time. It is made in two sizes, distinguished by the mark K-1 or K-2 on the side of

the valve body. The K-1 triple is used with 6-in. and 8-in. and the K-2 triple with 10-in. brake cylinders. The K-1 triple has but two bolt holes while the K-2 triple has three bolt holes in the reservoir flange. The K-1 triple and the F-36 triple are so made that they will bolt to the same reservoir; the K-2 triple and the H-49 triple are so made that they will bolt to the same reservoir.

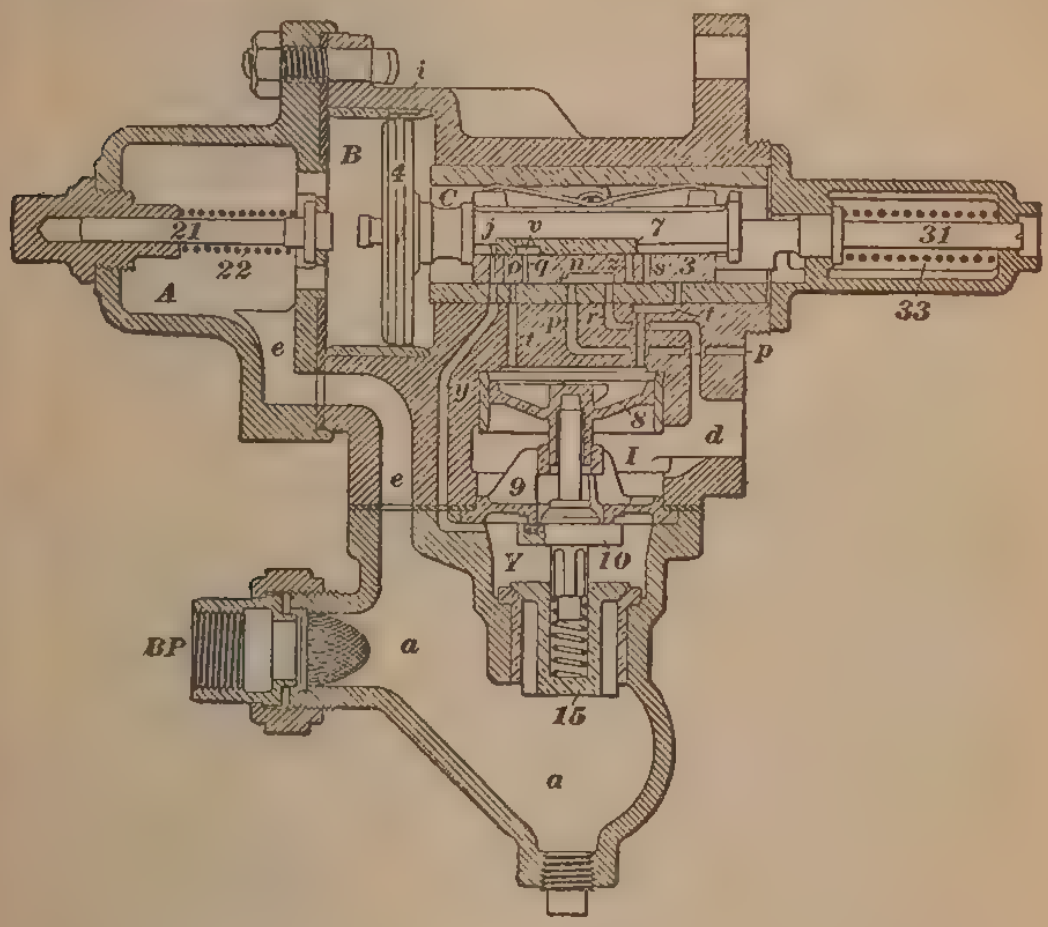

FIG. 11

A diagrammatic view of the triple valve is given in Fig. 11.

Quick-Service Feature.—The object of the quick-service feature is to quicken the serial application of the brakes on long trains, so as to reduce the interval between the application of the first and the last brakes. This is accomplished by each triple valve venting brake-pipe air momentarily through a restricted passage into the brake cylinder, thus producing at each triple a slight brake-pipe reduction that is quickly transmitted from car to car throughout the brake pipe in a

manner similar to a quick-action application. With a train of all K triple valves, this feature very materially reduces the time of application below that required by H triples; applies the brakes more uniformly throughout the train; insures the application of all the brakes with light brake-pipe reductions; gives a higher brake-cylinder pressure, increasing the brake-cylinder pressure about 1 lb. on equalization with standard piston travel; and effects a considerable saving in air. By venting brake-pipe air into the brake cylinders, the K triple reduces the time of discharge of brake-pipe air from the brake-valve exhaust for a given reduction considerably below the time necessary with H triples.

The quick-service feature operates only on trains of such lengths that the volume of the brake pipe is too large for brake-pipe pressure to be reduced at the proper rate through the brake-valve exhaust. If the reduction can be made at the proper rate, as with short trains, the quick-service feature automatically becomes inoperative.

Retarded- or Uniform-Release Feature.—To release the brakes, main-reservoir pressure is thrown into the brake pipe, so as to cause a wave of pressure to flow from the head end toward the rear. The head triples feel the impulse first and move to release position quite an interval before the rear triples. They cannot be prevented from going to release position first; therefore, to get a uniform release of the brakes throughout the train the exhaust port of the head triples is restricted, which retards the exhaust of brake-cylinder air sufficiently to permit the head and rear brakes to let go at about the same instant.

The object of the retarded- or uniform-release feature is to retard the exhaust from the brake cylinders of the head brakes so as to make the release of the brakes more uniform throughout the train. With H triples, the head brakes begin to release first. After a 15-lb. reduction on an eighty-car train, they fully release 30 sec. before the rear brakes. With K triples, the head triples move to release position first, but about the first thirty triples are forced past normal release to retarded-release position and their brake cylinders release through a restricted port; only the rear triples move

to normal release position and exhaust through the full size of the exhaust port. The relative sizes of the restricted and normal exhaust ports are such that the head and rear triples exhaust their brake cylinders in approximately the same time; consequently, the brakes release uniformly throughout the train and in less than half the time required by H triples. This results in much smoother operation, and greatly reduces the shocks and consequent break-in-twos, slid flat wheels, and damage to equipment and lading.

To move a triple valve to retarded-release position, the brake-pipe pressure must be raised about 3 lb. above auxiliary-reservoir pressure. On a long train it has been found impossible to obtain this difference of pressure beyond about thirty cars back of the engine; consequently, the triple valves beyond that point do not go to retarded-release position.

Uniform-Recharge Feature.—The object of the uniform-recharge feature is to increase the rate of rise of brake-pipe pressure in the rear end and to make the auxiliary reservoirs throughout the train recharge at approximately the same rate, thus insuring a more prompt action of the rear-end brakes and preventing the head brakes from reapplying when the brake valve is moved to running position. When H triple valves are used, all the feed-grooves are of the same size; consequently, the head auxiliaries overcharge on account of the higher brake-pipe pressure they are subjected to with the brake valve in release position. Thus, when the brake valve is moved to running position, the pressure in the head end of the brake pipe drops until it equalizes with the lower pressure in the rear end of the brake pipe and the head-end brakes reapply.

With K triple valves, the feed-groove (located in the ridge on the back of the triple position) through which the auxiliary charges when the triple is in retarded-release position, is about half as large as the feed-groove used when the triple is in normal release position; consequently, the head-end auxiliaries charge through a restricted opening that compensates for the higher brake-pipe pressure in the head end and permits more of the air passing into the brake pipe to flow to the rear end of the train, charging the brake pipe to a higher pressure, and releasing and recharging the brakes more promptly.

In releasing the brakes, the pressure in the head end of the train rises much more rapidly and to a higher pressure than in the rear end. This is due to the head end being nearer the supply of air, to the frictional resistance offered to the flow of the air by the brake pipe, and to the fact that each triple valve starts to recharge its auxiliary the moment it moves to release position. The primary object of the uniform-recharge feature, therefore, is to increase the rate of rise of brake-pipe pressure toward the rear end, thereby obtaining a quicker release and recharge of the rear brakes; this results in shortening the time necessary to release all brakes, in a more uniform release of all brakes, and in a more uniform and quicker recharge of all auxiliaries.

OPERATION OF TYPE K TRIPLE VALVES

Full-Release and Charging Position.—When the engineer's brake valve is placed in full-release or running position, the air entering the brake pipe raises the pressure in chamber *B* above that in the slide-valve chamber *C* and the auxiliary reservoir, and moves the triple piston, slide valve, and graduating valve to the right. If brake-pipe pressure in chamber *B* does not exceed the auxiliary-reservoir pressure in chamber *C* by 3 lb., as is usually the case on all cars back of the thirtieth car of a long train, the retarded-release stem and spring will stop the triple piston and slide valve in full-release position. When in this position, the feed-groove in the triple-piston bushing is uncovered and brake-pipe air passes through it past the triple piston and charges the auxiliary reservoir; also, a port in the slide valve registers with a port in the slide-valve seat and conveys air to the slide-valve chamber and the auxiliary, thus assisting in charging the auxiliary reservoir, the check-valve *15* being unseated by brake-pipe pressure while air is passing to the auxiliary reservoir.

The cavity in the slide valve fully connects the brake cylinder with the exhaust so that brake-cylinder air can escape freely to the atmosphere.

Air flows from the brake pipe through the feed-groove into the auxiliary until the pressures equalize and the auxiliary reservoir is fully charged. Air flows through the feed-port

into the auxiliary until the pressures are equalized near enough for the check-valve spring to seat the check-valve, after which the auxiliary charges through the feed-groove alone.

Quick-Service Position.—When a service reduction is made in the brake-pipe pressure at the brake valve, the pressure on the brake-pipe side of the triple piston is reduced faster than auxiliary-reservoir pressure can reduce through the feed-groove. This produces a difference of pressure on the two faces of the piston, and when this difference becomes about 2 lb. per sq. in., the auxiliary-reservoir pressure, being the greater, forces the piston forwards to application position, taking the graduating valve *7* with it and closing the feed groove. This movement of the triple piston first causes the graduating valve to uncover the graduating port and to connect two ports in the back of the slide valve through the cavity in the valve; then the shoulder on the triple-piston stem engages the slide valve and moves it to application position. If the difference in pressure on the two faces of the triple piston is not sufficient to compress the graduating spring *22*, these parts will be held in quick-service position.

In this position, the triple piston is close to or against the graduating stem but does not compress the graduating spring. The slide valve cuts off the connection between the exhaust ports so that brake-cylinder pressure cannot pass to the atmosphere. Auxiliary-reservoir air now flows into the brake cylinder and applies the brakes; also, brake-pipe pressure, raising check-valve *15*, passes to the chamber above the emergency piston, from which place it can pass the emergency piston, which fits loosely in its cylinder, to the brake cylinder. Ports leading to the chamber above the emergency piston are so restricted that the flow of air through them, when connected, is not great enough to raise sufficient pressure above the emergency piston to force it down and cause an emergency action of the triple, but the air that passes to the brake cylinder reduces the brake-pipe pressure locally at each triple valve just enough to cause the next triple valve to operate promptly. This local reduction acts to transmit quickly and uniformly the brake-valve reduction from car to car in a manner similar to the serial action during an emergency application, only the

amount of the reduction is not so great. As a result of this serial action, the time interval between the operation of the first and last brakes on a long train is greatly reduced; also, with a long train of K triples, the time required for the air to exhaust from the brake-pipe exhaust valve of the brake valve for a given reduction will be greatly reduced below the time required with a train of H triples. The venting of brake-pipe air into the brake cylinder results in a pressure on equalization that is about 1 lb. higher.

After the triple piston has moved the slide valve to quick-service position, the slide valve does not move again until the brake is released or a sufficient reduction is made in brake-pipe pressure to move it to full-service or emergency position; the graduating valve controls the quick-service ports in the slide valve, so that they are opened each time the graduating valve opens the service port and closed each time the piston moves the graduating valve to lap position.

The quick-service feature of the K triple valve operates only when the brake-pipe reduction is being made at less than the proper rate, as when the train is long. With a short train, the brake valve can reduce brake-pipe pressure as fast as is necessary, and the local reduction is not desirable; hence, under such conditions, the quick-service feature automatically goes out of service by the triple valve going to full-service position.

Full-Service Position.—The strength of the graduating spring *22* is such that when the reduction in the brake pipe is being made at the proper rate, the difference in pressure on the triple piston will be great enough to compress the graduating spring sufficiently to permit the slide valve to assume full-service position. Thus, as the quick-service feature is not needed, it is automatically cut out of commission.

When the brake-pipe reduction is slower than it should be, as when the train is long or during moderate reductions, the service port is opened sufficiently to prevent enough difference of pressure from being formed to compress the graduating spring *22*.

With the triple valve in full-service position, the graduating port and brake-cylinder port register fully. The quick-service

port is blanked by the slide valve so that no brake-pipe air can pass to the brake cylinder through the feed-port. The local reduction of brake-pipe pressure at each triple valve is thus prevented because the reduction is being made as fast as desirable at the brake valve, and any local reduction will cause undesired quick action of the brakes. However, the brakes will apply promptly because the service port is fully open and auxiliary pressure reduces at the same rate as brakepipe pressure.

Lap Position.—The lap position assumed, by the triple valve, from quick-service position is different from the lap position assumed from full-service position. This is due to the fact that the slide valve remains stationary and is not moved when the triple piston moves the graduating valve to lap the service ports. The triple valve is held in service position as long as the brake-pipe pressure continues to reduce. When it ceases, auxiliary-reservoir air still flows into the brake cylinder until the auxiliary pressure is reduced below brake-pipe pressure sufficiently to cause the triple piston to be moved toward release position and the shoulder of the stem comes in contact with the slide valve. The difference in pressure necessary to move the piston and graduating valve is not sufficient to overcome the friction of the slide valve, so that any further movement of the piston is stopped by the slide valve.

When the piston starts to lap position from quick-service position, the parts come to rest in quick-service lap position. In this position the graduating valve *7* closes the top ends of the graduating port and the port leading to the top of the emergency piston *8*, so no more air can pass to the brake cylinder either from the auxiliary reservoir or from the brake pipe.

If the triple valve is in full-service position when the reduction of brake-pipe air at the brake valve ceases, it will assume lap position in the manner just explained, but the triple piston will be assisted in its movement to lap position by the graduating spring *22*, which was slightly compressed, and the piston will be stopped in full-service lap position, instead of in quick-service lap position.

COMPARISON OF TYPES K AND H-1 (F-36) TRIPLE VALVES

K Triple					H-1 (F-36) Triple				
Brake-Pipe Pressure	Auxiliary-Reservoir Pressure After Reduction	Reduction in Brake Pipe	Cylinder Pressure	Piston Travel	Brake-Pipe Pressure	Auxiliary-Reservoir Pressure After Reduction	Reduction in Brake Pipe	Cylinder Pressure	Piston Travel
83	71	12	18	12	78	67	12	7	12
84	72	12	20	11	80	68	12	10	11
82	69	12	22	10	81	69	12	12	10
80	68	12	27	9	78	66	12	16	9
80	68	12	35	8	82	68	12	22	8
80	68	12	40	7	80	68	12	25	7
80	68	12	50	6	80	69	12	28	6
76	65	12	60	5	79	66	12	45	5
75	65	12	65	4	80	68	12	50	4

First Reduction					Second Reduction	First Reduction					Second Reduction
Brake-Pipe Pressure	Auxiliary-Reservoir Pressure After Reduction	Reduction in Brake Pipe	Cylinder Pressure	Piston Travel	With Retainer Up	Brake-Pipe Pressure	Auxiliary-Reservoir Pressure After Reduction	Reduction in Brake Pipe	Cylinder Pressure	Piston Travel	With Retainer Up
80	70	10	16	12	42	78	69	10	5	12	30
80	70	10	18	11	45	80	70	10	8	11	34
80	70	10	21	10	50	80	70	10	9	10	37
80	69	10	25	9	55	80	70	10	10	9	39
80	70	10	32	8	60	79	69	10	15	8	40
80	69	10	35	7	63	80	71	10	17	7	43
80	69	10	44	6	65	80	71	10	24	6	47
80	69	10	55	5	67	80	68	10	27	5	52
80	68	10	67	4	68	80	68	10	38	4	65

Retarded-Release Position.—If, when releasing the brakes, the brake-pipe pressure is 3 lb. or more in excess of the auxiliary-reservoir pressure as is usually the case on the head cars of a train, the triple piston, instead of stopping when it strikes the retarding stem *31*, will compress the retarding spring *33* and move to retarded-release position, taking the slide and graduating valves with it.

When in this position, the ridge on the back of the triple piston is against the end of the slide-valve bushing, with which it makes an air-tight joint except at the feed-groove. Brake-pipe air therefore passes the triple piston through the feed-groove; thence through the feed-groove in the shoulder of the piston to the auxiliary reservoir. As the feed-groove in the shoulder of the piston has only about half the area of the feed-groove in the bushing, the auxiliary reservoir will be recharged much more slowly when the triple valve is in retarded-release position than when it is in full-release position. The feed-port in the slide-valve seat is covered by the slide valve in retarded-release position, so that the auxiliary reservoir can get no air from that source.

In this position of the triple valve, the exhaust passage is through a restricted passage through the body of the slide valve, so that brake-cylinder air escapes very slowly to the exhaust port and the atmosphere. When the difference of pressure between the brake-pipe and auxiliary reservoir is less than the tension of the retarded-release spring by an amount sufficient to compensate for the friction of the parts, the triple piston and slide valve will be moved back to full-release position by the spring.

Emergency Position.—The emergency application of the K triple valves is the same as for all other types of triple valves.

COMPARISON OF TYPES K AND H-1 (F-36) TRIPLE VALVES

In the table on page 200 are given the results of comparative tests of types K and H-1 (F-36) triple valves; the table shows the pressures in the brake cylinder with different piston travels and reductions. There was 15 lb. in the brake cylinder when the second reduction was made.

FREIGHT-BRAKE TESTS

Rack Tests.—In the first test, it was desired to find the fall in brake-pipe pressure of a one-hundred-car train 4,000 ft. long. Indicators were, therefore, placed on the first, fifteenth, thirtieth, fiftieth, seventy-fifth, and one-hundredth cars. To test the brake pipe alone, the triple valves were cut out and the brake-valve handle placed in emergency position. The results of this test are shown in Fig. 1. The curves show the

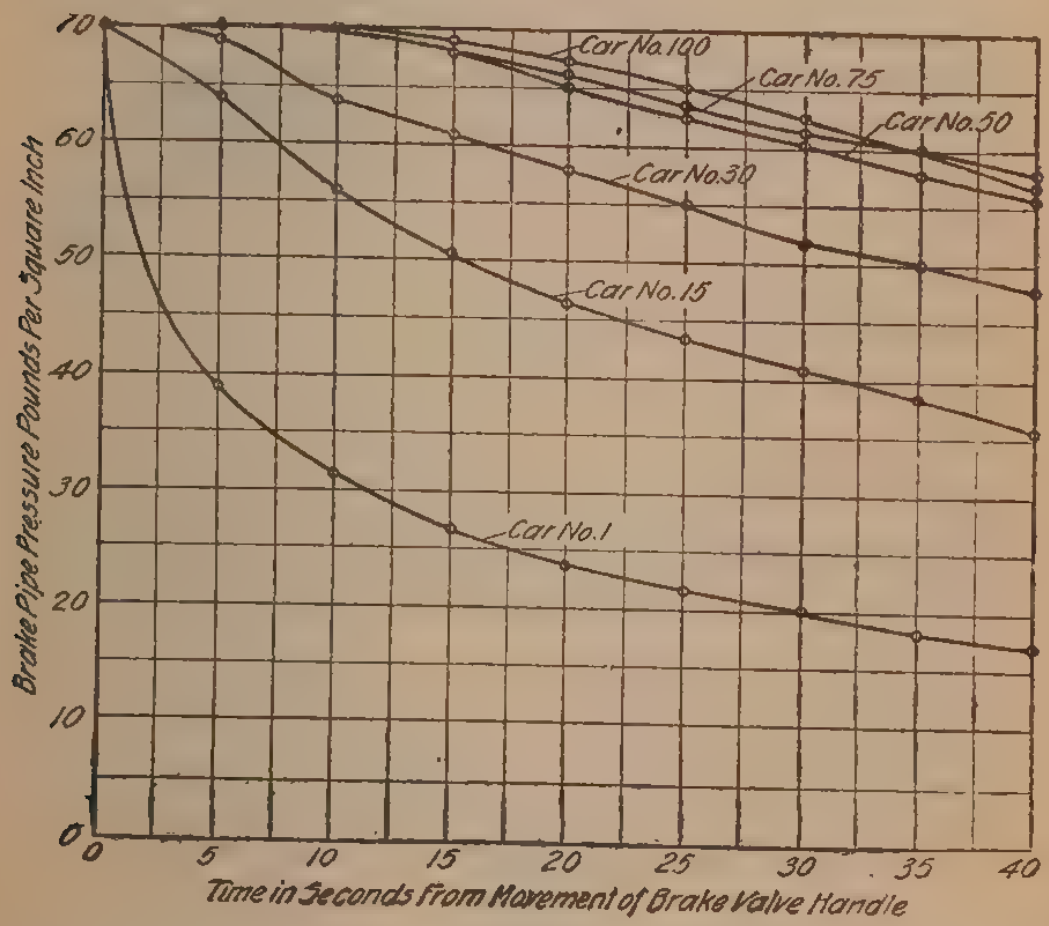

FIG. 1

characteristics in the fall of brake-pipe pressure in various parts of the train and the relative pressures on the different cars indicated at any time during the reduction. For instance, at 25 sec. the pressure on the first car had fallen 48 lb.; on the fifteenth car, 26 lb.; on the thirtieth car, 15 lb.; on the fiftieth car, 7 lb.; on the seventy-fifth car, 6 lb.; on the one-hundredth car, 5 lb. This shows a difference of 43 lb. in the brake-pipe

pressure of the first and the one-hundredth cars. It will be noted that the fall in pressure from the fiftieth to the one-hundredth car was practically uniform, showing that the reduction was due more to the expansion of the air in the brake pipe back of the fiftieth car rather than to a flow of the air. This shows that enlarging the outlet from the brake pipe at the brake valve will not hasten the application of the brakes.

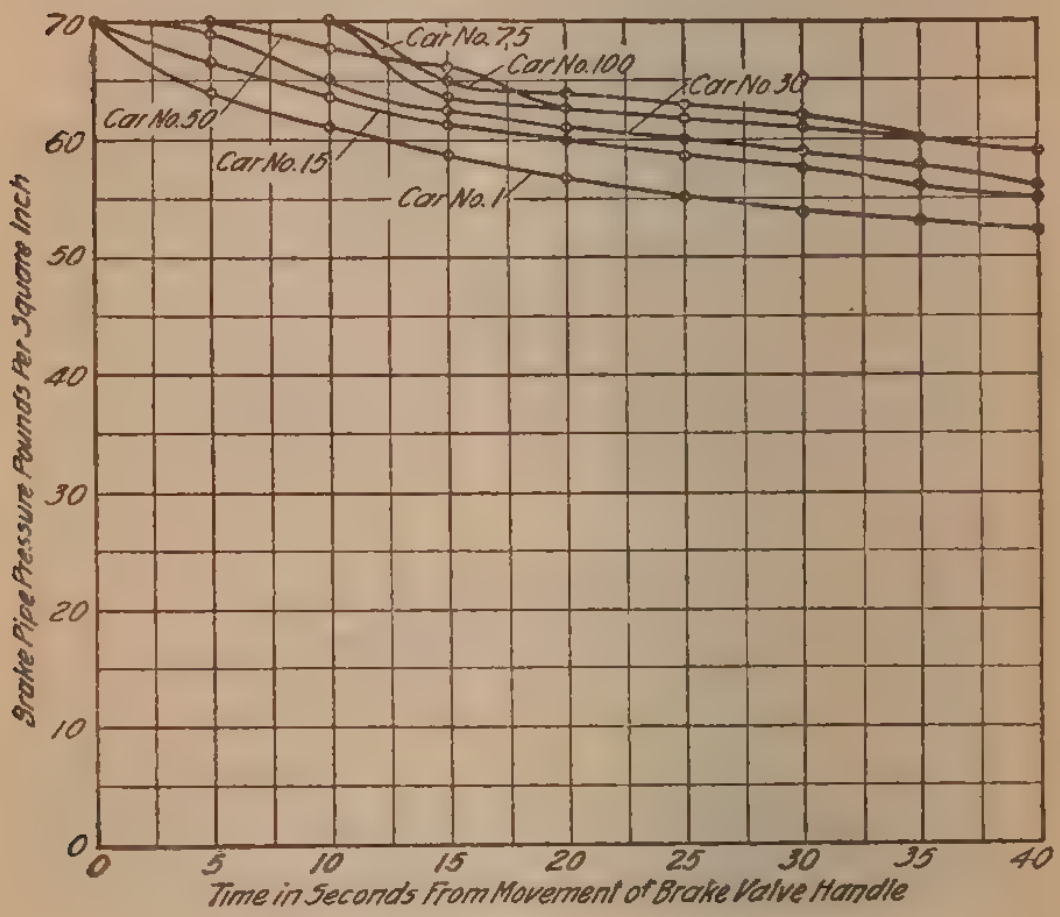

FIG 2

Also, it shows the necessity of the quick-action feature and the quick-service feature of the K triple valve for trains of this length.

The second test was to determine the fall in brake-pipe pressure on individual cars of a one-hundred-car train, 4,000 ft. long; type K tripie valves were cut in; and a service reduction was made. The results of this test are shown in Fig. 2. Comparing these curves with those in Fig. 1, shows how the local

reduction at each triple valve, due to the quick-service feature of the triple valve, gives the necessary rate of reduction toward the rear of the train. For example, after 25 sec. the pressure on the first car had fallen 15 lb.; on the fifteenth car, 12 lb.; on the thirtieth, 10 lb.; the fiftieth and seventy-fifth, 8 lb.; and on the one-hundredth, 7 lb. This shows only 8 lb. difference between the first and last cars.

The third test was a comparison of fall in brake-pipe pressure throughout a one-hundred-car train, 4,000 ft. long, equipped

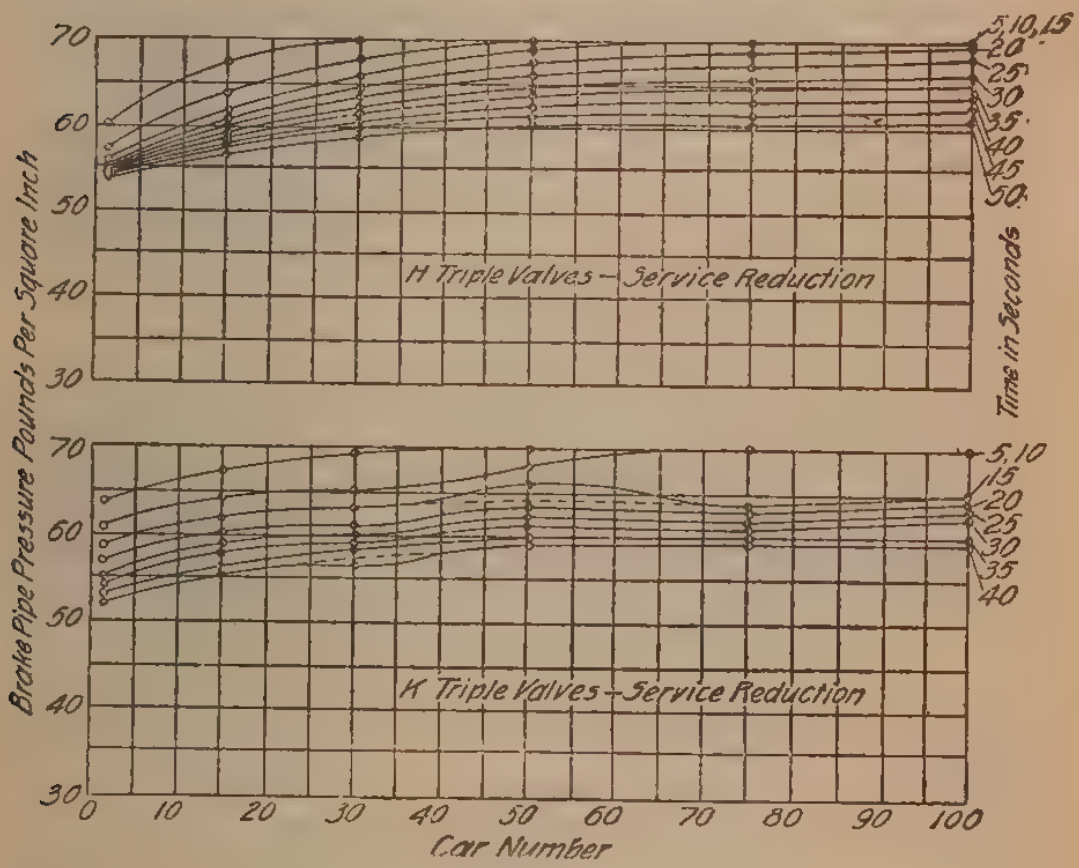

FIG. 3

with types K and H triple valves, when service reduction was made. The results of this test are shown in Fig. 3. These curves show how the brake-pipe pressure throughout the train actually falls during a continuous full-service reduction of the brakes. It will be noted with the H triple valves that 25 sec. elapsed before sufficient brake-pipe reduction had taken place at the last car to cause any movement of the triple valve; the head end had reduced to 55 lb. so the first

brake had set nearly in full. With the K triple valves, when the brake-pipe pressure at the first car had fallen to 55 lb., the reduction at the last car was 62 lb. so the rear brakes were applied with a good effective reduction. It required the same interval, 25 sec., with both types of triples to reduce the pressure at the first car to 55 lb.; consequently, the curves show clearly that the quick-service feature of the K triple valves causes a more uniform reduction throughout the train.

The fourth test was a comparison of rate of propagation of brake-pipe reduction throughout a train of one hundred cars, 4,000 ft. long, equipped with types H and K triple valves, wher

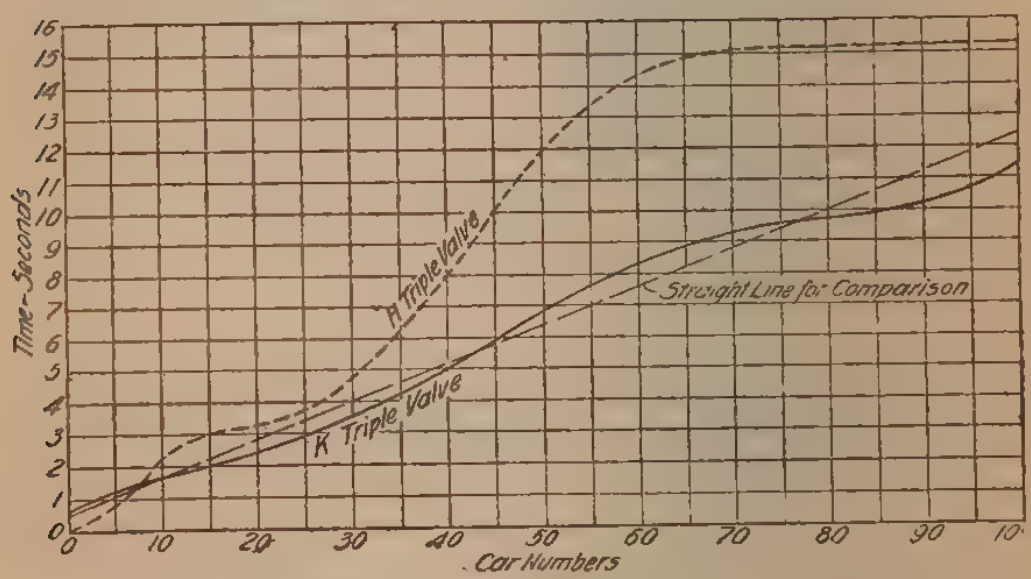

FIG. 4

a 17-lb. service reduction was made. The results of the test are shown in Fig. 4. These curves contrast the rates at which the two types of triple valves cause a reduction to travel back through the brake pipe. The time is from the movement of the brake-valve handle to the beginning of the fall in brake-pipe pressures.

In Fig. 5 are given brake-cylinder cards showing the application curves of H and K triple valves on a train of one hundred cars, when a 15-lb. brake-pipe reduction was made from a 70-lb. brake-pipe pressure. These curves show the effect of the different rates of reduction on the application of the brakes for the two types of triple valves. The H triples required 15 sec.

to give 6 lb. pressure in the first cylinder, and 51 sec. to give 6 lb. in the one-hundredth cylinder. When fully set with the 15-lb. reduction, the first car had 27 lb. cylinder pressure, and the last car, 21 lb. Eight brakes failed to apply. The K triple gave 6 lb. cylinder pressure on the first car in about 5 sec., and on the last car in about 19 sec. All brakes applied, and the reduction gave 36 lb. in the first cylinder and 30 lb. in the last.

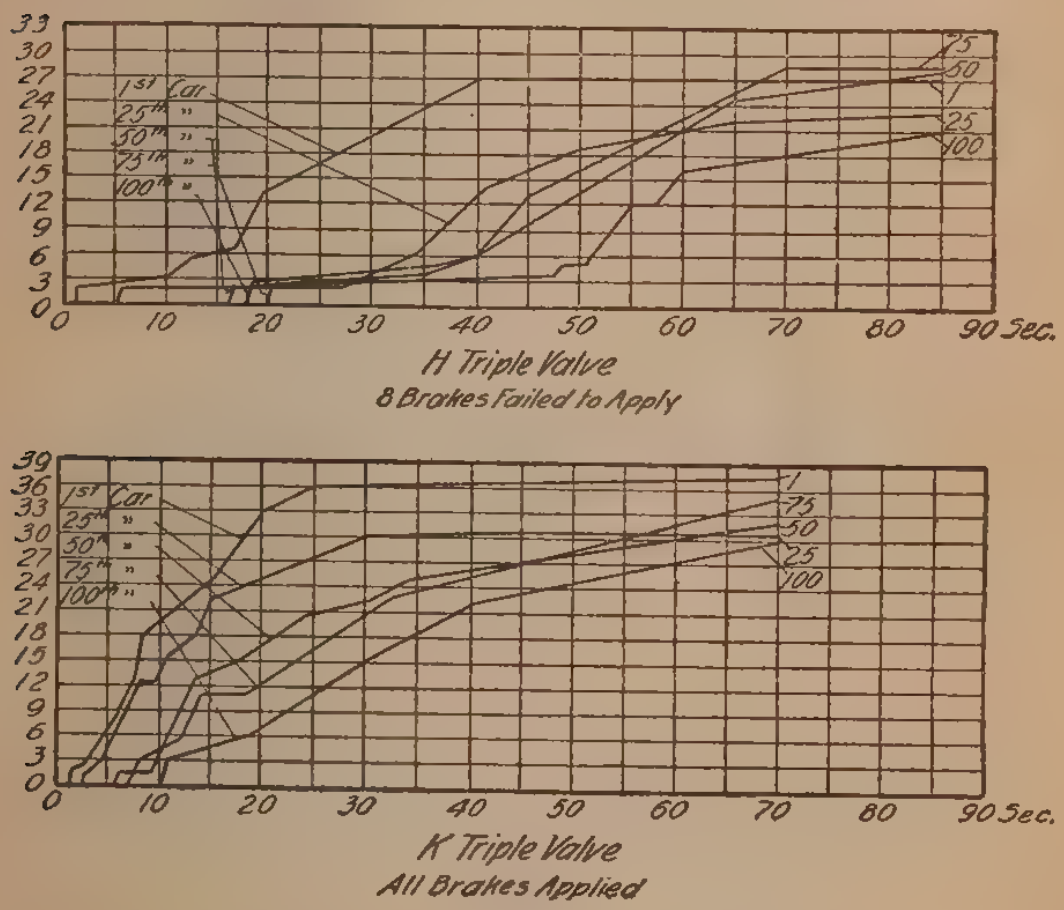

FIG. 5

The time required to obtain 20 lb. brake-cylinder pressure with H and K triple valves on an eighty-car train is shown in Fig. 6. The curves show that the H triple required 25, 93, and 95 sec. to give 20 lb. pressure in the first, fiftieth and eightieth cars, respectively. The K triple required only 17½, 37, and 39½ sec., respectively. The K triples, therefore, gave 20 lb. brake-cylinder pressure in the last car 55½ sec. before the H triples did, or before 20 lb. was obtained in the

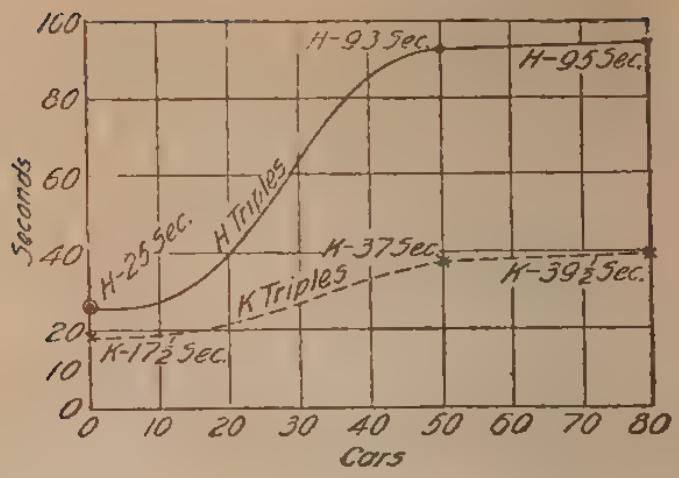

FIG. 6

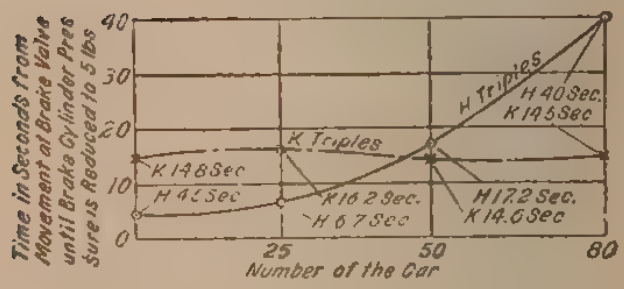

FIG. 7

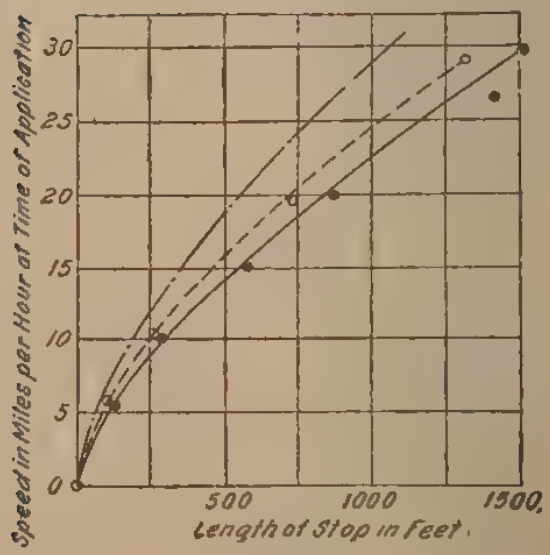

FIG. 8

twentieth car. This shows why the slack in a train equipped with K triples gives so much less trouble from bunching and recoiling than it does in a train of H triples.

Standing Tests.—The time required to release brakes on an eighty-car train, equipped with H and K triple valves and standing, is shown in Fig. 7. These curves show that all the brakes having K triple valves released at practically the same time, in approximately from 14 to 16 sec. The brakes having H triples, however, were very ununiform; the first

Type of Triple Valves	Speed at Instant of Application Miles per Hour	Length of Stop Feet	Type of Triple Valve	Speed at Instant of Application Miles per Hour	Length of Stop Feet
K	5.2	73.9	*K*	20.2	591.4
K and *H*	5.7	104.3	*K* and *H*	19.6	743.6
H	5.5	117.4	*H*	20.2	885.0
K	10.2	221.8	*K*	25.0	817.6
K and *H*	10.4	269.5	*K* and *H*	25.0	1,069.8
H	10.1	295.7	*H*	27.0	1,447.2
K	15.1	391.4	*K*	30.5	1,068.8
K and *H*	15.0	465.3	*K* and *H*	29.2	1,300.3
H	15.2	584.9	*H*	29.8	1,517.8

brake released in 4½ sec., whereas the last brake required 40 sec. to release, a difference of 35½ sec. This shows why it is impossible to release brakes at slow speeds with H triples without danger of breaking in two, whereas the danger is practically eliminated where K triples are used.

Running Test.—The distance required to stop, from different speeds, trains equipped with H, K, and mixed H and K triple valves, when a 15-lb. reduction is made, is shown in Fig. 8 and in the accompanying table,

PASSENGER-BRAKE TRIPLE VALVES

DEVELOPMENT OF PASSENGER TRIPLE VALVE

The governing factors in passenger-train control are speed, weight, and frequency of trains. The limits of time and distance in which a train must be stopped in emergencies to insure safety in train operation were worked out in connection with the quick-action automatic brake at the time when the weight and speed of trains were moderate and the frequency of trains was not such a controlling factor. The problem today is to devise a brake that will enable the modern, heavy, high-speed trains to be stopped in approximately the same time and distance as were the lighter trains of the past.

Since the introduction of the quick-action brake, a growing yearly increase in passenger traffic has brought with it a growing increase in the length and weight of passenger trains, in the train speed, and in the frequency of the service. Each increase reduced the comparative efficiency of the existing brake system and necessitated improvements to compensate for this inefficiency, in order that stops could be made within the limits prescribed by safety. These improvements consisted in additions of apparatus to the existing quick-action brake systems that resulted finally in the brake known as the high-speed brake. For a time, this brake accomplished its purpose, but later changes in operative conditions so reduced its efficiency as to neutralize partly the improvements that had been made on the older forms of brake, and further improvements were imperative.

In order to determine the necessary improvements, exhaustive tests and experiments were conducted to ascertain the limitations of the standard passenger triple valves when used in the latest modern service. These tests emphasized the facts that to fill the present requirements the improved brake not only would have to meet the requirements for emergency stops, but also would have to be flexible enough to make service stops with due regard for other factors, such as the comfort of the passengers; economy of time in making stops; necessity of accuracy and smoothness in making stops;

necessity for making several applications one after the other, in quick succession; necessity for easy, smooth control of train at both high and low speeds, in order that quick, smooth stops

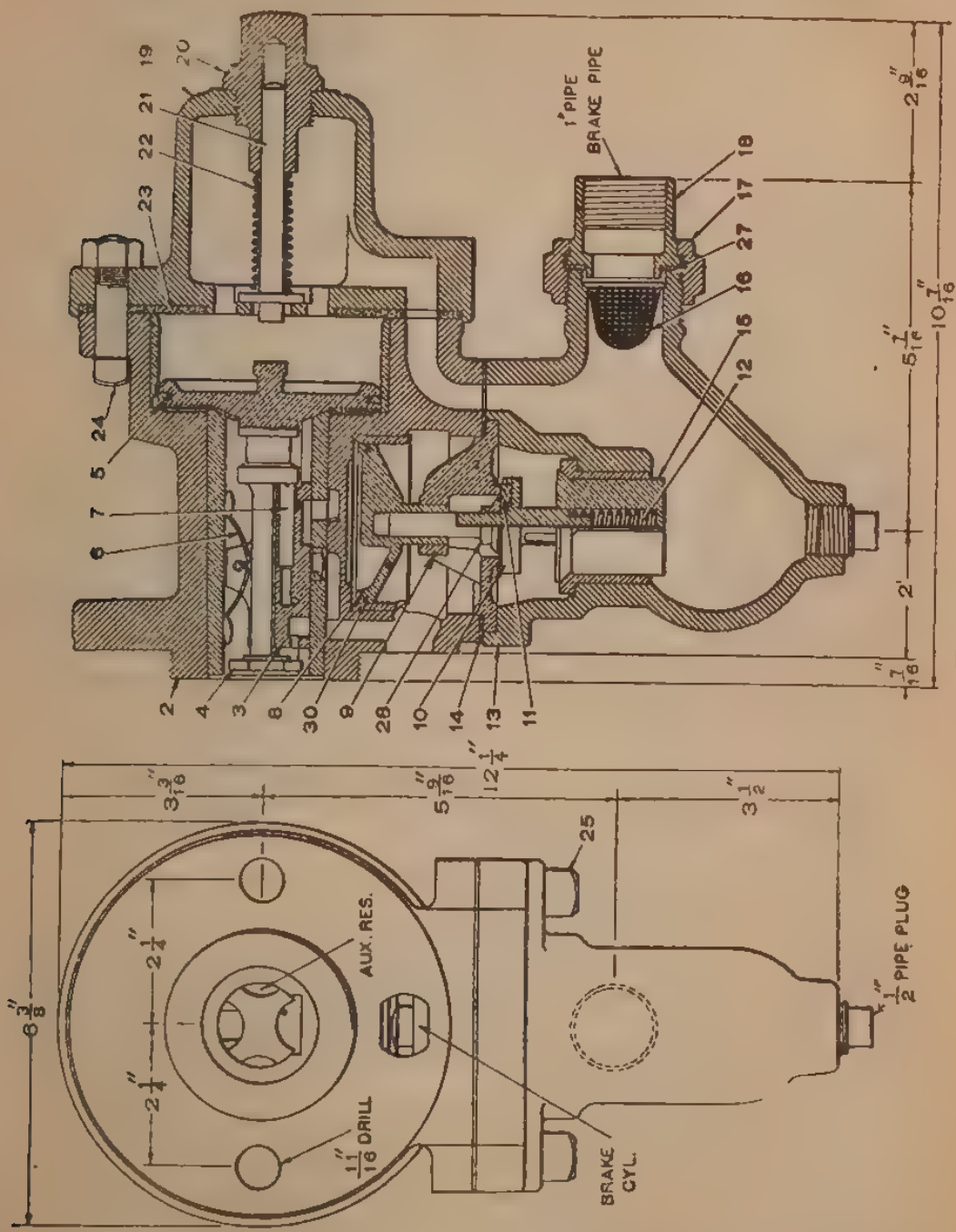

FIG. 1

could be made with the least liability of wheels sliding. It was impossible to fulfil all these requirements except by adding new features to the brake system, and for this reason

the LN passenger equipment was designed and perfected. The LN equipment proved satisfactory for cars up to 130,000 lb., but the construction of cars of over 150,000 lb. made the development of the PC passenger equipment necessary.

P-1 (F-27), QUICK-ACTION, PASSENGER, TRIPLE VALVE

The P-1 (F-27), quick-action, passenger, triple valve, shown in Fig. 1, is used with the 8-in. and 10-in. passenger-car brake cylinders and the 10-in. passenger-tender brake cylinders; its weight is 38 lb. Though similar in appearance, this valve differs essentially from the H-1 and H-2 freight triple valves, and should never be used in connection with freight-car brakes. In addition to being marked P-1 on the valve body, it may also be distinguished from the freight triple valves by the fact that it has one exhaust outlet while the freight triple valves have two; it may be distinguished from the P-2 triple valve in having two instead of three bolt holes in the back flange. The bore of the P-1 slide-valve bush is $1\frac{3}{8}$ in. The operation of this triple valve is the same as the type H triple. The piece number of the P-1 triple valve, complete, is 1,760; the piece and reference numbers of the various parts are given in the accompanying list.

Pc. No.	*Ref. No.*	*Name of Part*
1,761	2	Body, bushed.
29,138	3	Slide valve.
1,767	4	Main piston, includes 5.
10,032	5	Main-piston ring.
1,730	6	Slide-valve spring.
29,139	7	Graduating valve.
9,752	8	Emergency piston, includes 30.
1,740	9	Emergency-valve seat.
1,735	10	Emergency valve, includes 11 and 28.
1,737	11	Rubber seat.
1,745	12	Check-valve spring.
12,850	13	Check-valve case, complete, includes $\frac{1}{2}$-in. pipe plug.
1,754	14	Check-valve-case gasket.
1,744	15	Check-valve.
1,751	16	Strainer.
1,749	17	1-in. union nut.
1,750	18	1-in. union swivel.
1,746	19	Cylinder cap.
1,747	20	Graduating-stem nut.

Pc. No.	Ref. No.	Name of Part
1,748	21	Graduating stem.
1,523	22	Graduating spring.
1,753	23	Cylinder-cap gasket.
10,836	24	Bolt and nut, for cylinder cap
1,752	25	Capscrew.
1,004		½-in. pipe plug.
1,755	27	1-in. union gasket.
1,738	28	Emergency-valve nut.
1,773	30	Emergency-piston ring.
2,427		*Triple-valve gasket.

If the old-style valve or graduating valve is desired, specify as follows:

Pc. No.	Ref. No.	Name of Part
1,769	3	Slide valve.
1,732	7	Graduating valve.

These parts are not interchangeable with present standard parts. The new-style slide valve, Piece No. 29,138, has a straight drill through the longitudinal center line of the slide valve for the new $\frac{5}{16}$-in. graduating valve, Piece No. 29,139. The old-style slide valve, Piece No. 1,769, has a ¼-in. drill with counterbore for the old graduating valve, Piece No. 1,732. The graduating valves are of different diameters and the old-style valve has a shoulder. The slide valve of this triple valve is similar to that of the H triple valves.

P-2 (F-29), QUICK-ACTION, PASSENGER, TRIPLE VALVE

The P-2 (F-29), quick-action, passenger, triple valve, shown in Fig. 2, is used with the 12-in., 14-in., and 16-in. passenger car and passenger-tender brake cylinders; its weight is 43 lb. Though similar in appearance, this valve differs essentially from all other quick-action triple valves, and should never be used except as specified. It is marked P-2 on the valve body, and has but one exhaust outlet, while the freight triple valves have two; it may be distinguished from the P-1 triple valve in having three instead of two bolt holes in the back flange. The bore of the P-2 slide-valve bush is 1¾ in. The operation of this triple valve is the same as the type H triple. The piece number of the P-2 triple valve complete, is 1,775.

*Listed for convenience only; not included in P-1 triple valve.

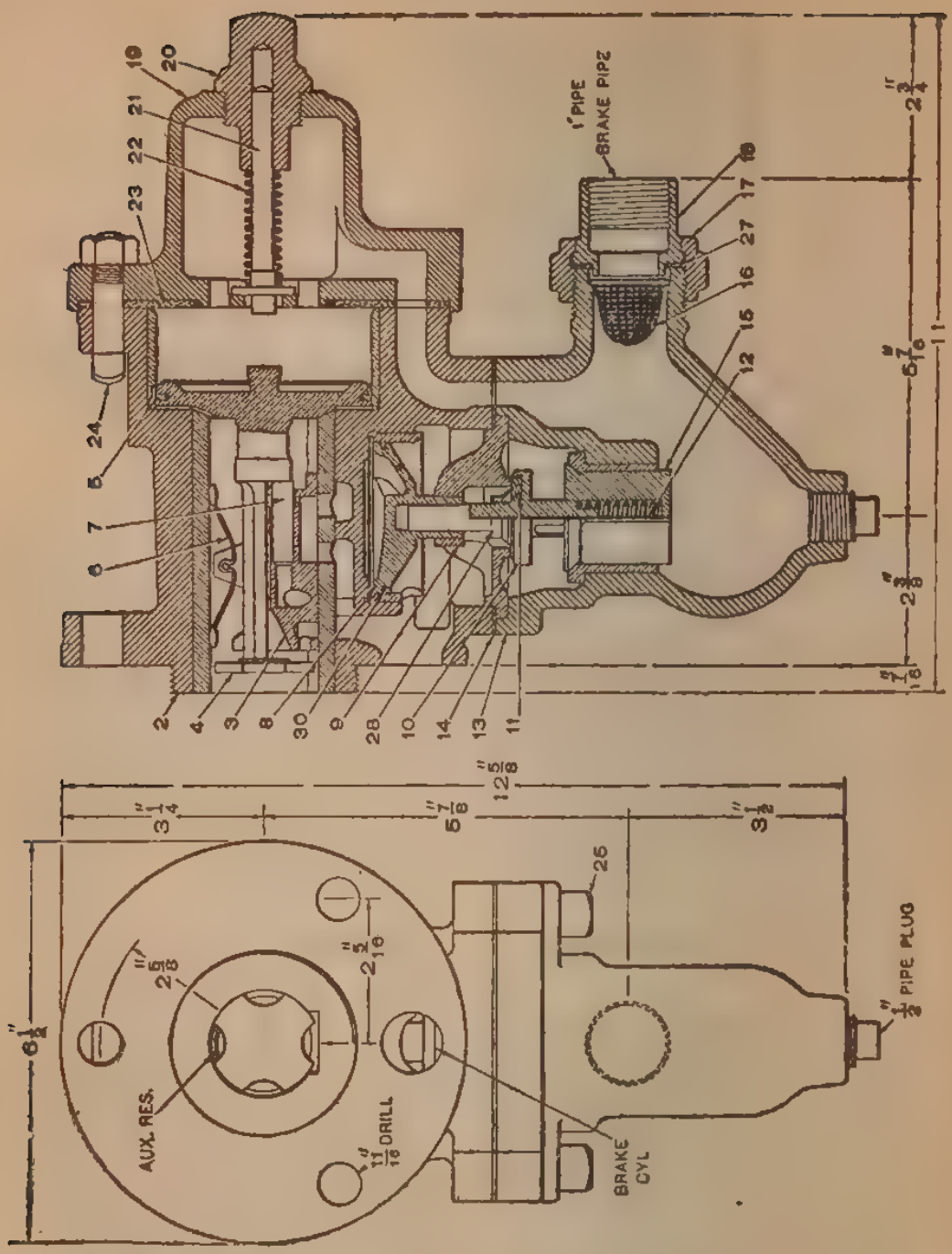

FIG. 2

Pc. No.	*Ref. No.*	*Name of Part*
2,187	2	Body, bushed.
1,786	3	Slide valve.
1,783	4	Main piston, includes 5.
10,032	5	Main-piston ring.
1,787	6	Slide-valve spring.
1,789	7	Graduating valve.
9,753	8	Emergency piston, includes 30.
1,795	9	Emergency-valve seat.
50,527	10	Emergency valve, includes 11 and 28.

Pc. No.	Ref. No.	Name of Part
1,737	11	Rubber seat.
1,745	12	Check-valve spring.
12,850	13	Check-valve case, complete.
1,754	14	Check-valve -case gasket.
1,744	15	Check-valve .
1,751	16	Strainer.
1,749	17	1-in. uni on nut.
1,750	18	1-in. uni on swivel.
1,746	19	Cylinder cap.
1,747	20	Gradua ting-stem nut.
1,748	21	Graduat ing stem.
1,523	22	Graduat ing spring.
1,753	23	Cylinder- cap gasket.
4,879	24	Bolt and nut, for cyli nder cap.
1,752	25	Capscrew.
1,004		½-in. pipe p lug.
1,755	27	1-in. union gasket.
1,794	28	Emergency- valve nut.
1,791	30	Emergency- piston ring.
4,760		*Triple-valve gasket.

Spring Identification of Type P Triple Valves

Triple Valve	Pc. No.	A* In.	B* In.	C* In.	No. Coils	Material	Name of Spring
P-1 and P-2	1,745	33/64	.072	1¾	11	Brass	Check-Valve
	1,523	39/64	.08	2⅝	13½	Nickeled Steel	Graduating

*A, B, C are dimensions of spring at points indicated in cut.

L-1-B QUICK-ACTION, PASSENGER, TRIPLE VALVE

The L-1-B triple valve, shown in Fig. 3, is used with the 8-in. and 10-in. brake cylin ders; it weighs 50 lb. Its piece number, with E-7 safety valve, complete, is 16.101.

Pc. No.	Ref. No.	Name of Part
16,184	2	Body, bushed.
16,127	3	Slide valve.
16,187	4	Main piston, includes 5.
10,032	5	Main-piston ring.
9,326	6	Slide-valve spring.
16,128	7	Graduating valve.
1,733	8	Emergency piston.

*Listed for convenience only; not included in P-2 triple valve.

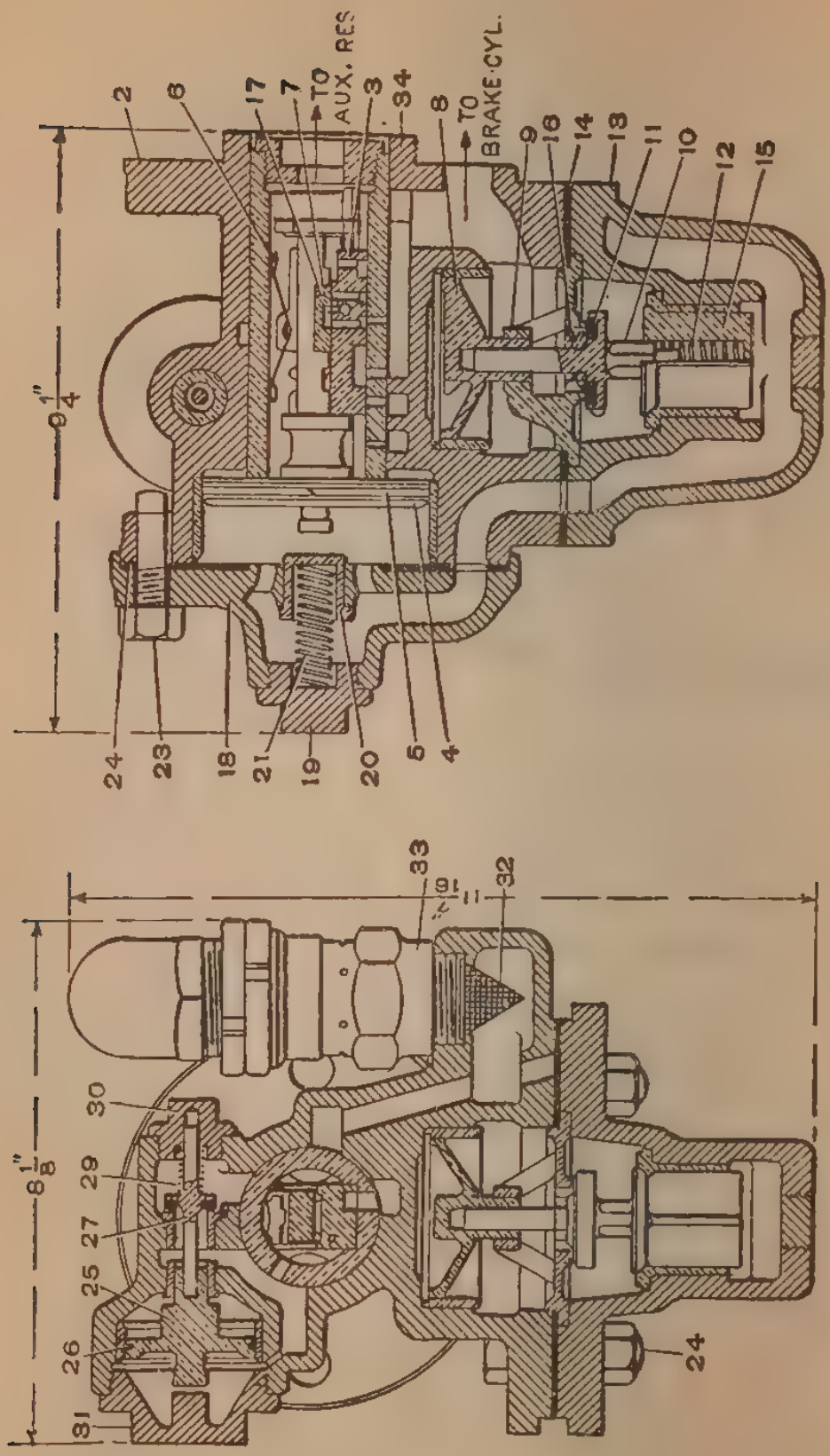
TO AUX. RES.
TO BRAKE CYL.
2
6
17
7
3
34
8
9
16
14
13
11
10
12
15
24
23
18
21
19
20
5
4
33
32
30
29
27
25
26
31
24

FIG. 3

Pc. No.	Ref. No.	Name of Part
1,740	9	Emergency-valve seat.
12,249	10	Emergency valve, includes 11 and 16.
10,417	11	Rubber seat for emergency valve.
1,745	12	Check-valve spring.
12,187	13	Check-valve case, complete.
12,183	14	Check-valve-case gasket.
1,744	15	Check-valve.
1,738	16	Emergency-valve nut.
9,844	17	Graduating-valve spring.
13,247	18	Cylinder cap.
14,357	19	Graduating-spring nut.
13,251	20	Graduating sleeve.
1,523	21	Graduating spring.
1,753	22	Cylinder-cap gasket.
4,879	23	Bolt and nut, for cylinder cap.
4,880	24	Bolt and nut, for check-valve case.
13,136	25	By-pass piston, includes 26.
14,284	26	By-pass-piston ring.
51,529	27	By-pass valve, complete.
51,528	28	Rubber seat.
53,003	29	By-pass-valve spring.
14,560	30	By-pass-valve cap.
12,984	31	By-pass-piston cap.
16,214	32	Strainer.
15,549	33	E-7 safety valve.
12,211	34	End cap.
8,969		*Triple-valve gasket.

If the triple valve is used in connection with a brake cylinder equipped with a high-speed reducing valve, the safety valve is not used, and orders should specify as follows: Piece No. 19,060, L-1-B triple valve, complete, less safety valve, with safety-valve opening plugged; and Piece No. 19,052, cap nut for safety-valve opening.

By-pass valve, No. 51,529, is interchangeable with previous by-pass No. 36,208, but the by-pass spring No. 53,003 is not interchangeable with previous by-pass valve spring No. 13,861. The spring No. 53,003 must be used with the by-pass valve No. 51,529.

L-2-A QUICK-ACTION, PASSENGER, TRIPLE VALVE

The L-2-A triple valve, shown in Fig. 4, is used with the 12-in. and 14-in. brake cylinders; it weighs 60 lb. The piece number with E-7 safety valve, complete, is 15,500.

*Listed for convenience only; not included in L-1-B triple valve.

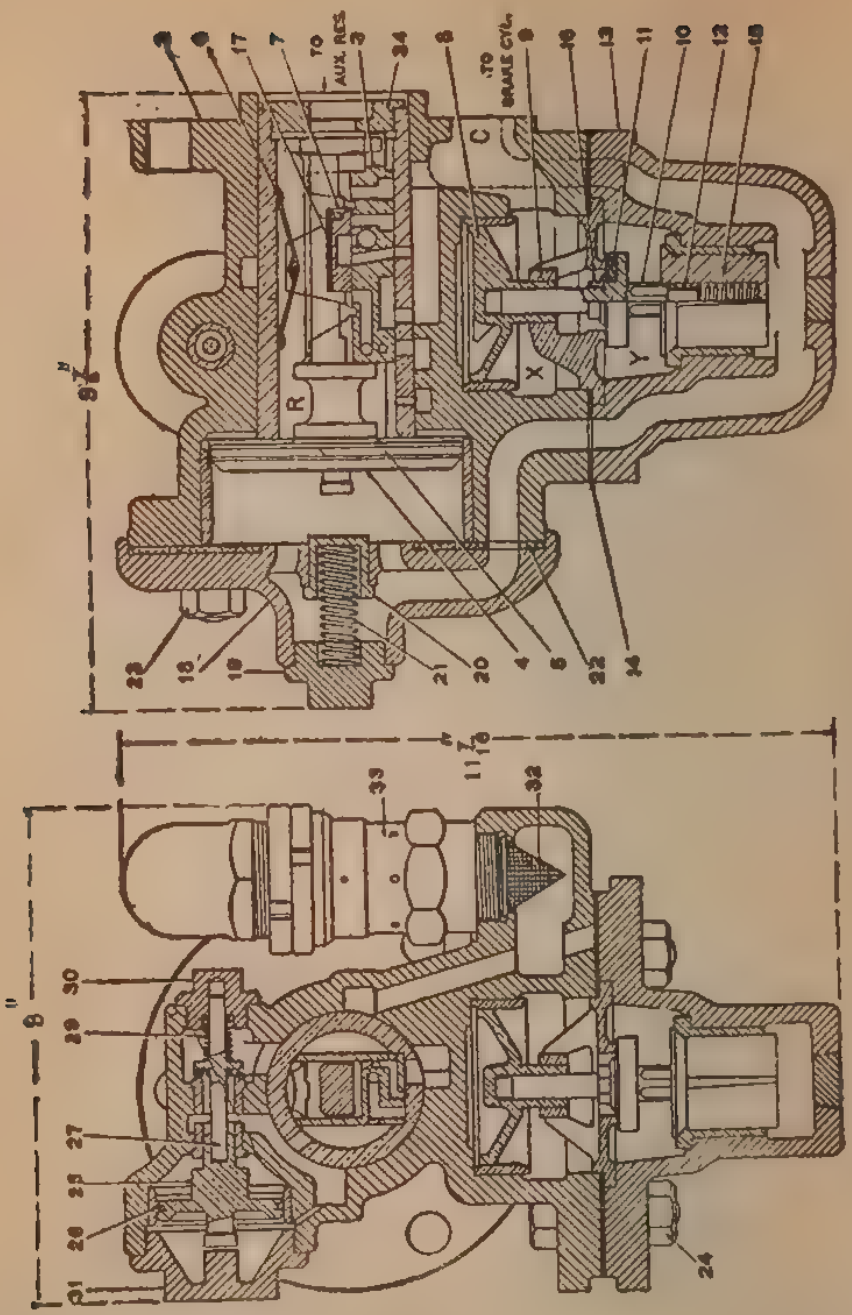

FIG. 4

Pc. No.	*Ref. No.*	*Name of Part*
15,478	2	Body, bushed.
15,450	3	Slide valve.
15,503	4	Main piston, includes 5.
12,891	5	Main-piston ring.
9,895	6	Slide-valve spring.
15,452	7	Graduating valve.
1,733	8	Emergency piston.
1,740	9	Emergency-valve seat.
12,249	10	Emergency valve, includes 11 and 16.
10,417	11	Rubber seat for emergency valve.
1,745	12	Check-valve spring.

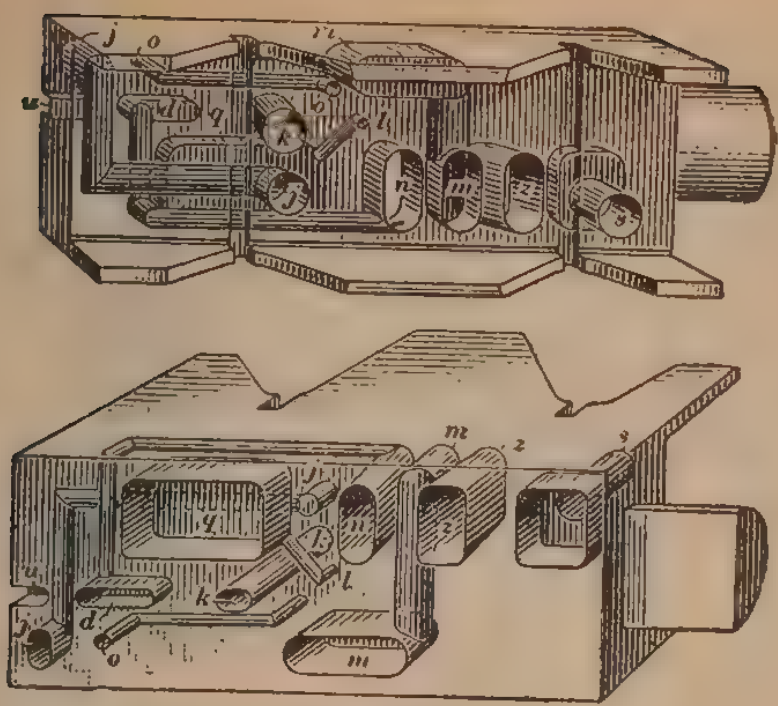

FIG. 5

Pc. No.	Ref. No.	Name of Part
12,187	13	Check-valve case, complete.
12,183	14	Check-valve-case gasket.
1,744	15	Check-valve.
1,738	16	Emergency-valve nut.
12,342	17	Graduating-valve spring.
14,404	18	Cylinder cap.
14,357	19	Graduating-spring nut.
13,251	20	Graduating sleeve.
1,523	21	Graduating spring.
12,755	22	Cylinder-cap gasket.
4,879	23	Bolt and nut, for cylinder cap.
4,880	24	Bolt and nut, for check-valve case.
13,136	25	By-pass piston, includes 26.
14,284	26	By-pass-piston ring.
51,529	27	By-pass valve.
51,528	28	Rubber seat.
53,003	29	By-pass-valve spring.
14,560	30	By-pass-valve cap.
12,984	31	By-pass-piston cap.
16,214	32	Strainer.
15,549	33	E-7 safety valve.
12,339	34	End cap.
9,356		*Triple-valve gasket.

If the triple valve is used in connection with a brake cylinder equipped with a high-speed reducing valve, the safety valve

*Listed for convenience only; not included in L-2-A triple.

is not used, and orders should specify as follows: Piece No. 19,059, L-2-A triple valve, complete, less safety valve, with safety-valve opening plugged; and Piece No. 19,052, cap nut

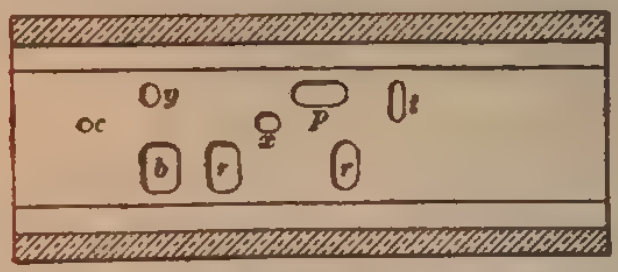

FIG. 6

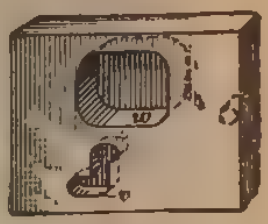

FIG. 7

for safety-valve opening. Fig. 5 shows two perspective views of the slide valve *3*; and Fig. 6, a view of the slide-valve seat; Fig. 7 is a perspective view of the graduating valve *7*.

Valve spring No. 53,003 is not interchangeable with previous spring No. 13,861.

L-3, QUICK-ACTION, PASSENGER, TRIPLE VALVE

The L-3 triple valve, shown in Fig. 8, is used with 16-in. and 18-in. brake cylinders. The piece number, with E-7 safety valve, complete, is 16,370. Its weight is 70 pounds.

Pc. No.	*Ref. No.*	*Name of Part*
16,080	2	Body, bushed.
16,095	3	Slide valve.
16,372	4	Main piston, includes 5.
16,306	5	Main-piston ring.
16,294	6	Slide-valve spring.
16,292	7	Graduating valve.
1,733	8	Emergency piston.
1,740	9	Emergency-valve seat.
1,735	10	Emergency valve, includes 11 and 16.
1,740	11	Rubber seat for emergency valve.
1,745	12	Check-valve spring.
12,187	13	Check-valve case, complete.
12,183	14	Check-valve-case gasket.
1,744	15	Check-valve nut.
1,738	16	Emergency-valve nut.
16,293	17	Graduating-valve spring.
16,287	18	Cylinder cap.
16,289	19	Graduating-spring nut.
16,288	20	Graduating sleeve.
16,301	21	Graduating spring.
16,305	22	Cylinder-cap gasket.
4,879	23	Bolt and nut, for cylinder cap.
4,880	24	Bolt and nut, for check-valve case.

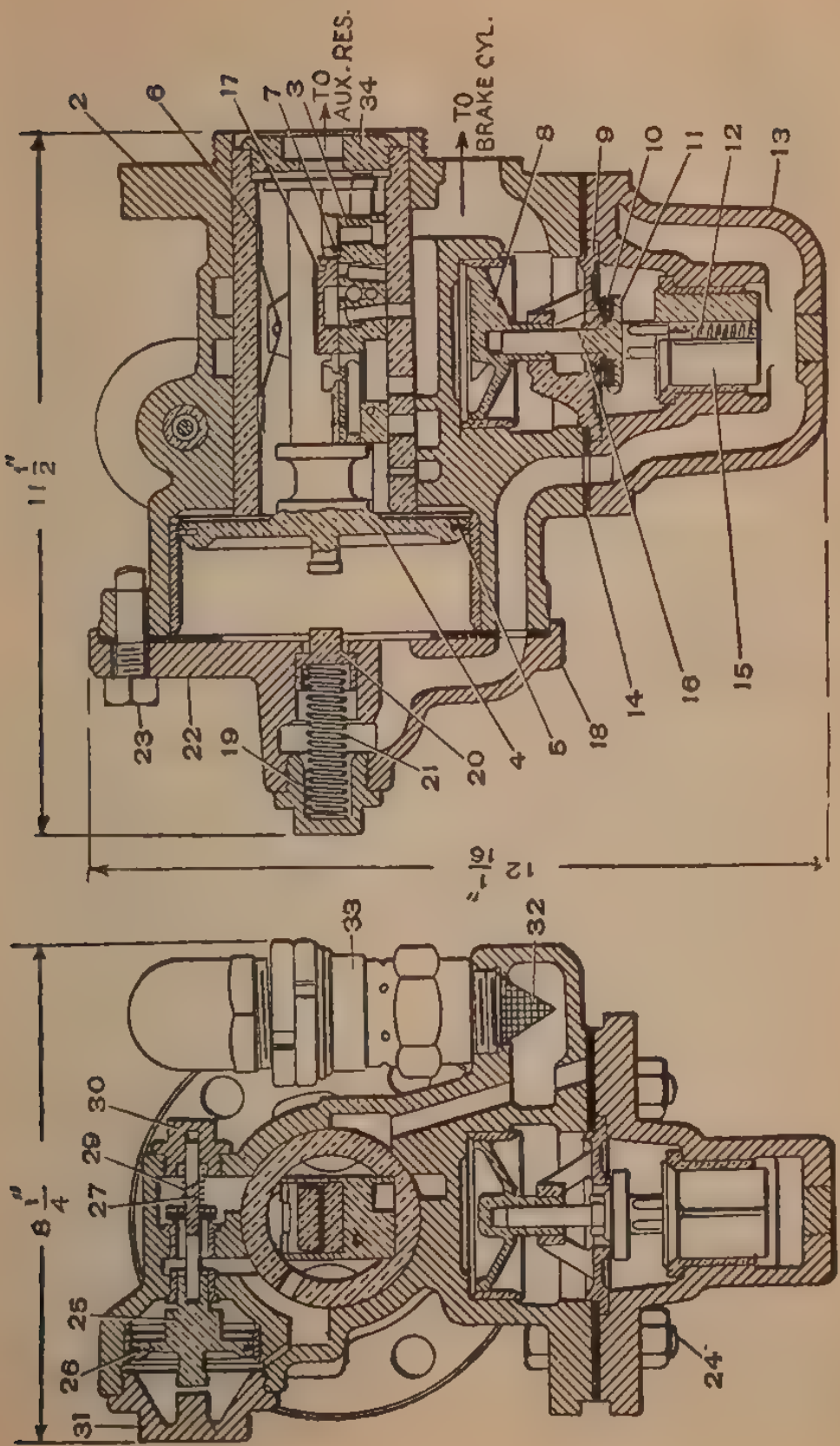
TO AUX. RES.
TO BRAKE CYL.
2
6
17
7
3
34
8
9
10
11
12
13
14
16
15
18
5
4
20
21
19
22
23
11 1/2"
12 1/16"
33
32
30
29
27
25
26
31
24
8 1/4"

FIG. 8

Pc. No.	*Ref. No.*	*Name of Part*
13,136	25	By-pass piston, includes 26.
14,284	26	By-pass-piston ring.
51,529	27	By-pass valve.
51,528	28	Rubber seat.
53,003	29	By-pass-valve spring.
14,560	30	By-pass-valve cap.
12,984	31	By-pass-piston cap.
16,214	32	Strainer.
15,549	33	E-7 safety valve.
12,848	34	End cap.

If the triple is used with a brake cylinder equipped with a high-speed reducing valve, the safety valve is not used, and orders must specify: Piece No. 19,061, L-3 triple valve, complete, less safety valve, with safety-valve opening plugged; and Piece No. 19,052, cap nut for safety-valve opening.

By-pass valve spring No. 53,003 is not interchangeable with previous spring No. 13,861.

Spring Identification of Type L Triple Valves

Triple Valve	Pc. No.	*A** In.	*B** In.	*C** In.	No. Coils	Material	Name of Spring
L-1-B L-2-A L-3	1,745 53,003	$\frac{33}{64}$ $\frac{27}{64}$	.072 .051	$1\frac{3}{4}$ $1\frac{1}{8}$	11 $8\frac{1}{2}$	Brass Phosphor-Bronze	Check-Valve By-Pass-Valve
L-1-B L-2-A	1,523	$\frac{29}{64}$	.08	$2\frac{5}{8}$	$13\frac{1}{2}$	Nickeled Steel	Graduating
L-3	16,301	$\frac{47}{64}$	.105	$3\frac{3}{8}$	16	Nickeled Steel	Graduating

**A*, *B*, *C* are dimensions of spring at points indicated in cut.

STYLES OF TYPE L TRIPLE VALVES

The LN passenger brake equipment derives its name from the fact that a type L triple valve is used in combination with a type N passenger-brake cylinder. The older form of equipment was known as the PM equipment, because a P triple was used in combination with an M brake cylinder. The type N passenger-brake cylinder is designed for use with the L triple valve, the seat for the triple on the pressure head

being suitable for the L triple. All the pipe connections are made direct to the brake-cylinder head, no pipe connections being made to the triple valve. A triple can be removed and replaced by another without disturbing any of the pipe connections, by simply removing from the triple-valve stud the nuts that hold the triple to the cylinder head. The brake-cylinder head has pipe connections for the brake pipe, auxiliary reservoir, brake cylinder, and supplementary reservoir.

The L triple valve is made in three styles. The letters and numerals designating the style of triple are cast in the side of the valve body. Other features that distinguish the L triple valve are the by-pass arrangement and the safety valve.

FEATURES OF TYPE L TRIPLE VALVES

The features added to the brake system by the L triple are: (1) High-emergency pressure feature; (2) quick-service feature; (3) graduated-release feature; (4) quick-recharge feature; and (5) service-application safety-valve feature.

High-Emergency Pressure Feature.—With the same brake-pipe pressure, the high-emergency pressure feature gives a much higher brake-cylinder pressure in emergency than the high-speed brake, and the full pressure is retained during the complete stop, thus enabling much shorter stops to be made. The feature consists in the use of a supplementary reservoir in addition to the regular auxiliary reservoir. The supplementary reservoir has about two and one-half times the capacity of the auxiliary reservoir, and in emergency applications it equalizes with the auxiliary reservoir and the brake cylinder, providing a high pressure, which is held throughout the stop. Also, it assists in obtaining the graduated release of the brakes.

Quick-Service Feature.—With the high-speed brake, the interval between the application of the first and the last brake increases with the length of the train. The quick-service feature of the L triple reduces this interval by venting a small quantity of brake-pipe air into the brake cylinder in service applications so as to produce a light serial application of the brakes similar to the quick action in emergency applications.

Graduated-Release Feature.—A graduated release cannot be made with P triples, but the supplementary reservoir of the

LN equipment makes a graduated-release feature possible for the type L triple valve. With type L triples, therefore, the brakes can be graduated either on or off, thus adding much to the flexibility of the brake. This results in reducing shock effects on long, heavy trains, and eliminates the loss of time and the risk incident to two-application stops. Also, graduating the brake off greatly reduces the risk of wheel sliding, and, in connection with the quick-recharge feature, makes it possible for a large number of applications to be made without exhausting the air supply.

Quick-Recharge Feature.—Increased weight of coaches necessitated an increase in the size of the brake cylinders used, until on the heavy coaches of today 16-in. and 18-in. cylinders are used instead of 10-in. and 12-in. cylinders. With an 8-in. piston travel, the 18-in. cylinder has a capacity of 2,036 cu. in. against a capacity of 675 cu. in. for the 10-in. cylinder. The 18-in. cylinder, therefore, will take three times as much air from its auxiliary at each application as the 10-in. cylinder. In recharging, therefore, the feed-groove of the triple of the 18-in. cylinder must be much larger than that of the triple of the 10-in. cylinder, in order to have the two recharge in the same time. Large feed-grooves, however, have a tendency to make a brake sluggish in applying on moderate reductions, on account of the back flow from the auxiliary reservoir; consequently, they are undesirable.

The L triple valve uses the regular size of feed-groove; besides, it employs in the slide-valve seat a quick-recharge port that is controlled by the slide valve, the check-valve preventing any back flow from the auxiliary reservoir during applications. This results in a rapid recharging of the auxiliary reservoirs, to nearly standard pressure, so that nearly full braking power is obtained immediately after a release has been made; consequently, a number of applications can be made in quick succession without materially reducing the pressure in the brake system.

Service-Application Safety-Valve Feature.—The auxiliary reservoir used with the LN equipment is smaller for the same size of brake cylinder than the auxiliary reservoir used with the other equipments. This limits the brake-cylinder pressure

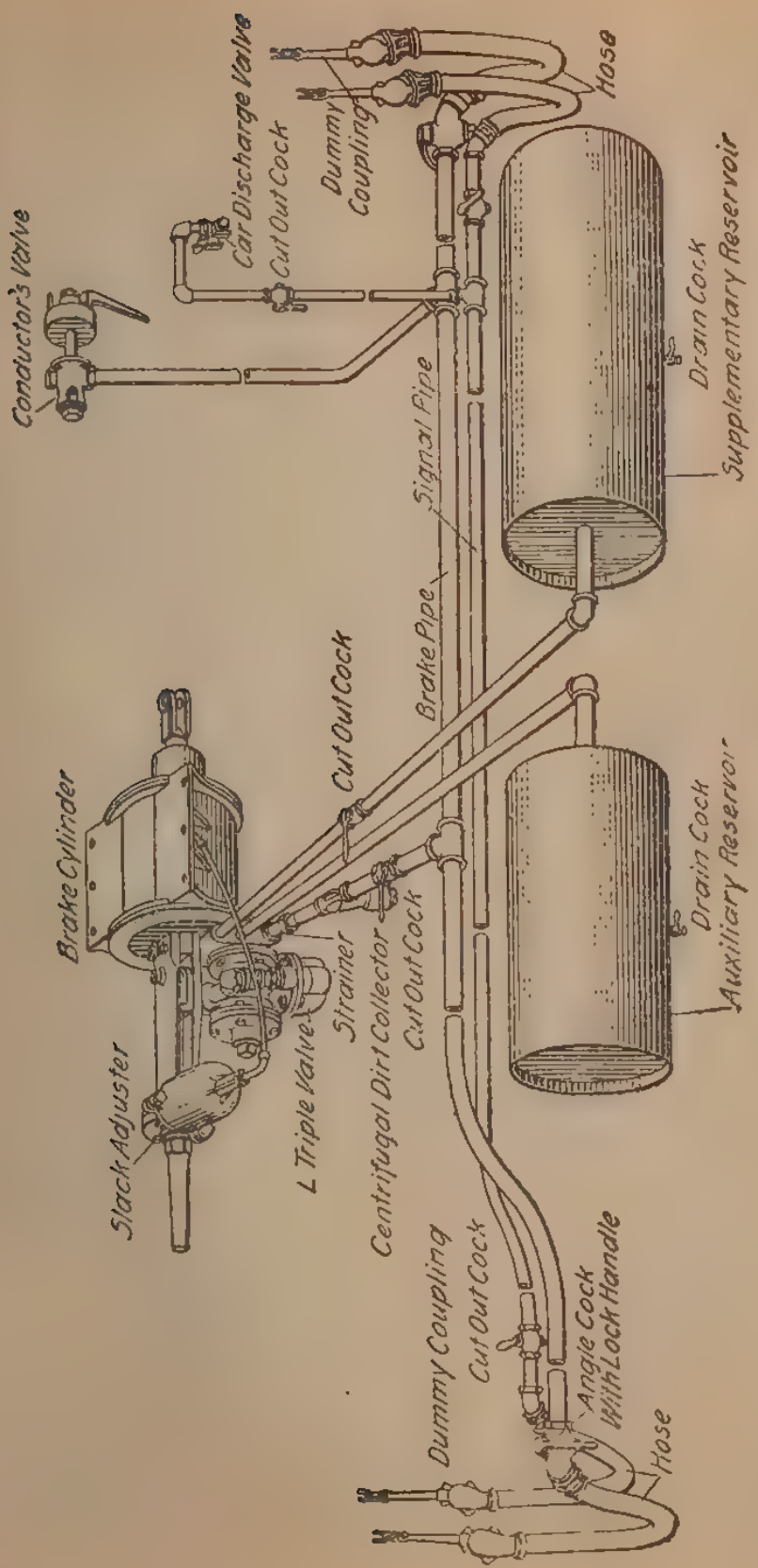
Conductor's Valve
Car Discharge Valve
Cut Out Cock
Dummy Coupling
Hose
Signal Pipe
Drain Cock
Supplementary Reservoir
Brake Pipe
Cut Out Cock
Brake Cylinder
Drain Cock
Auxiliary Reservoir
Strainer
Cut Out Cock
Centrifugal Dirt Collector
L Triple Valve
Slack Adjuster
Dummy Coupling
Cut Out Cock
Angle Cock
With Lock Handle
Hose

FIG. 1

at equalization to an amount that gives the proper braking power with the proper brake-pipe pressure while reducing the danger of wheel sliding to a minimum. As a protection against excessive brake-cylinder pressure during service applications, due to too high brake-pipe pressure, there is provided a reducing valve that operates only in service applications and is automatically cut out of service when an emergency application is made. This constitutes the service-application safety-valve feature of the L triple valve.

PIPING DIAGRAM OF LN EQUIPMENT

Fig. 1 shows the piping diagram of the type LN passenger equipment. The general arrangement of the piping and the location of the parts of this equipment are practically the same as in the ordinary PM passenger equipment, except that with the LN equipment the L triple valve replaces the older form of triple valve and the N brake-cylinder head, which is especially designed for use with the type L triple valve, takes the place of the older form of brake-cylinder head. Besides, a supplementary reservoir is added to the older form of passenger-car equipment.

The brake-pipe, which extends throughout the length of the car, has a branch pipe that connects to the brake-pipe connection on the brake-cylinder head. The centrifugal dirt collector in the branch pipe takes the place of the brake-pipe strainer formerly used with the car equipment. The cut-out cock in the branch pipe is for the purpose of cutting out the brake on that car when necessary. The function of the auxiliary reservoir is the same as in the older equipment. The pipe leading from the auxiliary reservoir is connected to the brake-cylinder head at the auxiliary-reservoir connection and this reservoir is charged through the triple valve the same as in the older form of equipment. The supplementary reservoir, which has a capacity about two and a half times that of the auxiliary reservoir, carries an extra supply of air, which assists in obtaining the graduated release of the brakes and makes possible the very high brake-cylinder pressure obtained in emergency applications. Also, it recharges the auxiliary reservoir quickly, after a service application and

release, to nearly standard pressure. The supplementary reservoir is charged through the triple valve from the brake pipe at the same time and to the same pressure as the auxiliary reservoir. It is connected to the triple valve by means of a pipe leading from the reservoir to the supplementary-reservoir connection on the brake-cylinder head. There is no direct connection between the auxiliary and the supplementary reservoir. The triple slide valve controls the flow of air from the auxiliary reservoir to the supplementary reservoir and from the supplementary reservoir to the auxiliary reservoir. The cut-out cock in the supplementary-reservoir pipe is for the purpose of cutting out the reservoir when desired, as in the case of the car being in a train in which most of the cars are equipped with the type PM brake. At such times, the cut-out cock between the triple valve and supplementary reservoir should be closed in order to have the L triple valve work in harmony with the older forms of triple valves. Closing this cut-out cock renders the graduated-release and the high emergency-pressure features inoperative.

In trains of mixed LN and PM equipments, the LN equipment may be left cut in if desired and the brakes operated accordingly, provided that more than half the cars have the LN equipment. However, it must be remembered that, in using the graduated-release feature, the PM equipments will release entirely at the first graduated release. The cars having the LN equipment, therefore, will have to do the braking for the entire train during the remainder of the stop, and there will be danger of wheel sliding on those cars. To avoid wheel sliding, the brake-cylinder pressure should be graduated down to a safe pressure before the speed is low.

DIAGRAMMATIC VIEWS OF TRIPLE

Fig. 2 gives a diagrammatic view of a type L triple valve with the check-valve case *13*, and the cylinder cap *18* removed. The triple valve is represented as having the auxiliary-reservoir end, the cylinder-cap end, the check-valve-case end, the slide-valve seat, and the by-pass mechanism in the same plane so as to show more readily the relations of the ports to each other.

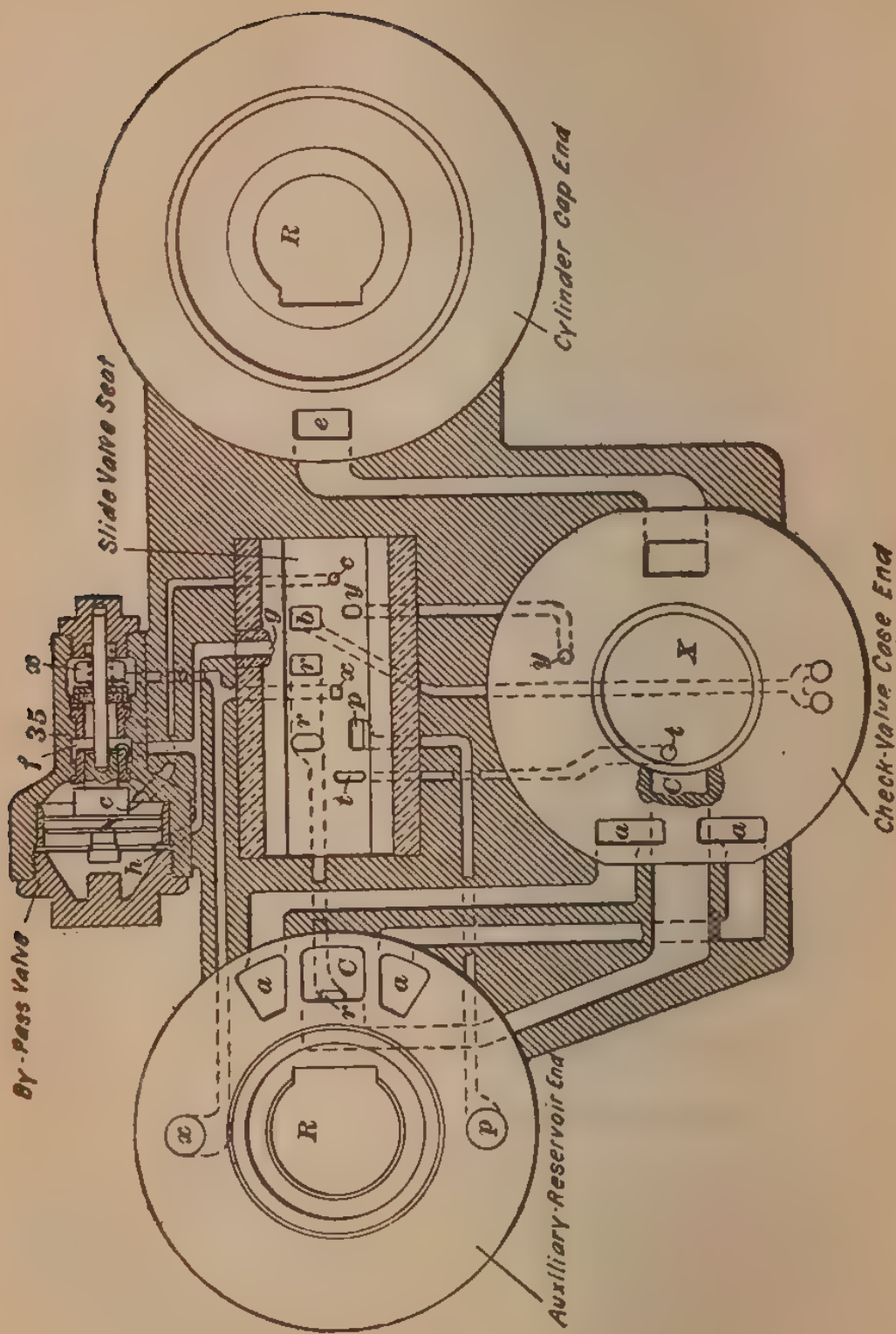
Cylinder Cap End
Slide Valve Seat
Check-Valve Case End
By-Pass Valve
Auxiliary-Reservoir End

FIG. 2

It will be noticed that port *e* in the cylinder-cap end leads to port *e* in the check-valve-case end; also, that the ports *a* in the auxiliary-reservoir end lead to the ports *a* in the check-valve-case end. The ports *a* connect with corresponding ports in the brake-cylinder head and convey brake-pipe air to the space under the check-valve *15*, thence through port *e* and passage *G* to chamber *H*. Port *C* in the auxiliary-reservoir end connects with a port in the brake-cylinder head that leads into the brake cylinder. Port *C* leads from the auxiliary-reservoir end of the triple valve to chamber *X*, and the ports *r* in the slide-valve seat lead into port *C*; hence all air entering in the brake cylinder through the triple valve must pass through port *C*. Port *p* in the auxiliary-reservoir end leads to port *p* in the slide-valve seat and connects with a port in the brake-cylinder head that leads to the atmosphere. Port *x* in the auxiliary-reservoir end divides, one branch leading to port *x* in the slide-valve seat and the other branch leading to chamber *x* back of the by-pass valve. Also, port *x* connects with a port in the brake-cylinder head that leads to the supplementary-reservoir connection. Port *c* in the slide-valve seat leads to the chamber back of the by-pass piston. Port *g*, located in the upper part of the slide-valve bushing, is used to supply auxiliary-reservoir pressure to chamber *f*, in front of the by-pass valve, and through port *h* to the chamber in front of the by-pass piston. Port *y* in the check-valve-case end leads to port *y* in the slide-valve seat; also, it connects with a port in the check-valve case *13* that leads to chamber *Y*, between the emergency valve and the check-valve. Port *t* leads from the slide-valve seat to the chamber above the emergency piston. Port *b* in the slide-valve seat leads through the triple-valve body to the chamber below the safety valve. In most of the illustrations, port *b* is indicated as being but one port, whereas, there is one port *b* in the slide-valve seat and two ports extending from the outer surface of the slide-valve bushing to the chamber below the safety valve. The only reason for having the two ports *b* is that it is desirable to drill the ports and the thickness of the metal in the triple-valve body will not permit of a single drill of suitable size to be used. As the ports *b* are drilled, the drilling must naturally commence at the check-valve-case face of the

triple valve, which accounts for the ports extending from the safety-valve chamber to the check-valve-case face. It is not necessary to plug this end of the ports, because the check-valve-case gasket blanks the ends of the ports.

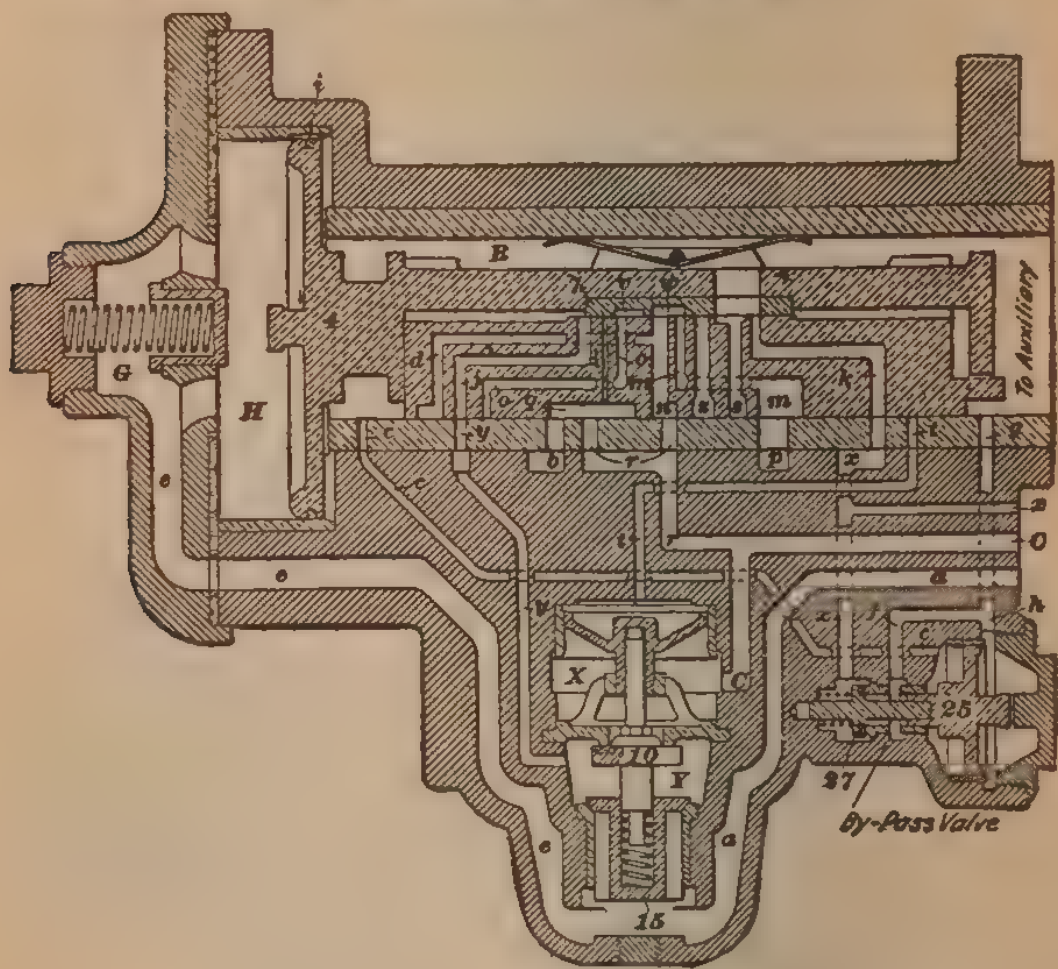

FIG. 3

Fig. 3. is a diagrammatic view of the triple valve showing the positions the parts assume in full-release and charging positions.

OPERATION OF LN EQUIPMENT

Charging Position.—When the brake pipe is first charged, brake-pipe air will pass through the passages into chamber *H* and move the main piston *4* to the right to full-release position, provided it is not already in that position. This movement opens the feed-groove and allows brake-pipe air to pass into chamber *R* and the auxiliary reservoir. The slide and graduating

valves are moved with the main piston to release position. The pressure in passage *a* raises the check-valve *15* and as port *y* in the slide-valve seat and port *j* in the slide valve register, brake-pipe air can also pass through port *y* into chamber *R* and the auxiliary reservoir. Port *k* in the slide valve registers with port *x* in the slide-valve seat, so that air can pass to the supplementary reservoir, which is charged at the same time and to the same pressure as the auxiliary reservoir. In this position of the slide valve, port *c* in the seat is not covered; hence, the chamber back of the by-pass piston into which port *c* opens, is charged to auxiliary-reservoir pressure. The chamber in front of the by-pass piston into which port *h* opens, is at all times connected to chamber *R* and the auxiliary reservoir through the ports *g* and *h*; thus, the pressures on both sides of the by-pass piston *25* are always equal except during emergency applications, when port *c* is connected to the brake cylinder through ports *d*, *n*, and *r*, and the by-pass-valve spring holds the by-pass valve *27* to its seat. Also, port *f* leads from port *g* to the chamber in front of the by-pass valve *27*, and this chamber is likewise charged to auxiliary-reservoir pressure. In the charging position, port *n* in the slide-valve registers with port *r* in the seat, cavity *w* in the graduating valve connects the upper ends of the ports with another port in the slide-valve face that registers with the exhaust port *p*, so that any air in the brake cylinder can pass to the atmosphere through this passage.

Release and Recharge.—When releasing the brakes, the brake-pipe pressure and the pressure in chamber *H* is increased above the auxiliary-reservoir pressure. This causes the main piston *4*, with the slide valve and the graduating valve, to be moved to full-release and charging position. Port *n* registers with port *r*, port *m* registers with port *p*, and cavity *w* in the graduating valve connects ports *m* and *n* on the back of the slide valve, thus allowing brake-cylinder air to escape to the atmosphere. The main piston *4* uncovers the feed-groove *i*, which allows brake-pipe air to pass to the auxiliary reservoir. Port *j* registers with port *y*, which also allows brake-pipe air from chamber *Y* to pass to chamber *R* and the auxiliary reservoir; also, port *x* registers with port *k* and, as standard

auxiliary-reservoir pressure was confined in the supplementary reservoir during the time that the brakes were applied, this pressure now assists in recharging the auxiliary reservoir. The auxiliary reservoir, therefore, begins to recharge from two sources—from the brake pipe through the feed-groove and through ports *y* and *j*, and from the supplementary reservoir, equalizing with it through ports *x* and *k*. As the supplementary reservoir is charged only to standard auxiliary-reservoir pressure, it only assists in quickly recharging up to the point of equalization of the two reservoirs, after which both reservoirs must be recharged together. As the supplementary reservoir is about two and one-half times the size of the auxiliary reservoir, every pound of pressure it is reduced in charging raises auxiliary pressure 2½ lb. Thus, after a 21-lb. reduction from 90 lb., equalization will occur when supplementary-reservoir pressure is reduced 6 lb., or to 84 lb.; auxiliary pressure will be raised 15 lb., or from 69 to 84 lb. The reservoirs, therefore, will equalize for about two-thirds of the recharge, and will have to be recharged from the brake pipe for the other third; but as this occurs through the feed-groove *i* and the quick-recharge port *y*, the time of full recharge is much less than the time for the old triples. During recharge and while graduating the release of the brakes, the pressures on the brake-pipe and auxiliary-reservoir sides of the main piston *4* are nearly balanced. This insures a prompt response of the brakes to any reduction or increase of brake-pipe pressure, irrespective of what operation may have just preceded. If, after releasing the brakes, the brake valve is placed in running position, the triple piston will remain in release position, and the auxiliary and supplementary reservoirs will be fully recharged.

Quick-Service Position.—When a service reduction is made in brake-pipe pressure, the pressure in chamber *H* is reduced faster than air can pass through the feed-groove *i*. As the auxiliary-reservoir pressure in chamber *R* is then greater than that in chamber *H*, the main piston *4* will be moved to the left, closing the feed-groove *i*, and shutting off communication between the brake pipe and the auxiliary reservoir. The graduating valve moves with the main piston *4* and closes

ports *j*, *m*, and *k* at the top of the slide valve, shutting off communication between the auxiliary and supplementary reservoirs, chamber *Y*, and the slide-valve chamber *R*, and between the brake cylinder and the atmosphere. It also uncovers port *z*, and cavity *v* in the graduating valve connects ports *l* and *o*. As the main piston *4* continues to move, the shoulder on the end of its stem engages the slide valve; all these parts then move together until the knob on the main piston *4* strikes the graduating sleeve; the triple valve is then in quick-service position. In this position port *k* in the slide valve is moved away from port *x*, which leads to the supplementary reservoir; port *z* registers with port *r*, and the auxiliary-reservoir air can pass to the brake cylinder through ports *z* and *r* and passage *C*; ports *y* and *o* register so that brake-pipe air from chamber *Y* passes to the brake cylinder through ports *y* and *o*, cavity *v* in the graduating valve, port *l*, cavity *q*, port *r*, and the passage *C*.

The pressure in chamber *Y* being reduced, check-valve *15* will rise and allow brake-pipe air from passage *a* to be supplied to this chamber as fast as it passes out through port *y*. This local reduction in brake-pipe pressure will assist in applying the brakes, but will not cause an emergency application, because the air must pass through the restricted port *l*. The tendency to produce quick action is also guarded against by proportioning the valves and locating the ports so that the service port *z* will not fully register with port *r* while port *y* is connected to port *o*, and any movement tending to compress the graduating spring will increase the opening of the service port *z* and decrease the opening through port *y*. This gradually increases the rate of discharge from the auxiliary reservoir, and decreases the rate of discharge from the brake pipe, until port *z* is opened its full extent and port *y* is entirely closed. When this takes place, the triple valve is said to be in full-service position. Triple valves in a short train will usually assume this position, because the reduction in a short brake pipe is more rapid than that in a long brake pipe. When in either quick-service or full-service position, cavity *q* in the slide valve connects the brake-cylinder port *r* with port *b*, thus connecting the brake cylinder with the safety

valve. The safety valve, being set at a pressure of 62 lb., will prevent the brake-cylinder pressure from rising above this amount during a service application.

Full-Service Position.—When a service reduction is made with a short train, brake-pipe pressure will reduce faster than when the train is long, resulting in a greater difference between brake-pipe pressure and auxiliary-reservoir pressure being formed. This will cause the triple piston to compress the graduating spring slightly and move the slide valve and graduating valve a little beyond quick-service position until port *o* ceases to register with port *y*. The triple is then in full-service position. When the slide valve is in this position, ports *z* and *r* register fully, the quick-service port *y* is blanked by the slide valve, and no brake-pipe air can pass to the brake cylinder from chamber *Y*. The local reduction of brake-pipe pressure at each triple valve is thus prevented, for the reason that it is not necessary; the reduction is as quick as desirable. The brakes apply promptly, because the service port *z* is then fully opened.

Service Lap Position.—The lap position assumed by the triple valve from quick-service position differs from the position it assumes from full-service position, owing to the fact that the slide valve is not moved when the piston moves the graduating valve to lap the service ports. The triple valve is held in service position as long as the brake-pipe reduction continues. When the brake-pipe reduction ceases auxiliary-reservoir air continues to flow into the brake cylinder until auxiliary-reservoir pressure is reduced below brake-pipe pressure sufficiently to cause the triple piston to be moved toward release position and the shoulder of the piston stem to come in contact with the slide valve. The difference in pressure necessary to move the piston and graduating valve is not sufficient to overcome the additional friction encountered in moving the slide valve, so that further movement of the piston is stopped by the slide valve.

When the piston starts to lap position from quick-service position, the parts come to rest in quick-service lap position. In this position the graduating valve *7* closes port *z* and its cavity *r* is moved from over port *l*, so that no more air can

pass to the brake cylinder either from the auxiliary reservoir through port *z* or from the brake pipe through port *y*.

If the triple valve is in full-service position when the reduction of brake-pipe air at the brake valve ceases, it will assume lap position in the same manner as just explained, but the triple piston will be assisted in its movement to lap position by the graduating spring, which was slightly compressed, and the piston will be stopped in full-service lap position instead of in quick-service lap position.

Graduated Release.—The triple assumes full-release position in discharging air from the brake cylinder to the atmosphere during a graduated release of the brakes. To graduate the release of the brakes, the brake-pipe pressure should be increased just enough to move the main piston, slide valve, and graduating valve to release position, and the brake valve should then be returned to lap position, which will prevent any further increase in brake-pipe pressure. As the main piston and the slide and graduating valves have been moved to release position, brake-cylinder air escapes to the atmosphere through ports *C*, *r*, *n*, cavity *w*, port *m*, and the exhaust port *p*; but, as the increase in brake-pipe pressure has ceased on account of the brake valve being lapped and as air from the supplementary reservoir still flows through ports *x* and *k* into chamber *R*, the pressure on the auxiliary-reservoir side of piston *4* is increased sufficiently above that on the brake-pipe side to move piston *4* and graduating valve *7* to graduated-release lap position. In this position, piston *4* closes the feed-groove *i* and the graduating valve closes ports *m*, *j*, and *k*, on the back of the slide valve. This cuts off the flow of air from the brake pipe to the auxiliary reservoir through the feed-groove *i* and the port *j* and from the brake cylinder to the atmosphere through port *m*, as well as from the supplementary reservoir to the auxiliary reservoir through port *k*. In this way the brakes are only partly released, as only a portion of the brake-cylinder air is allowed to escape to the atmosphere.

In releasing the brake, a series of such graduations may be made until the brake-pipe pressure has been restored to the pressure at which the auxiliary and supplementary-reservoir

pressures will equalize; then the brakes will fully release. The amount of reduction in brake-cylinder pressure for any given graduation depends on the amount of air pressure that is put into the brake pipe each time the brake valve is placed in release, or running, position during such manipulations. This will also determine the rate at which the brake is recharged.

Emergency Position.—When a heavy and sudden reduction in brake-pipe pressure is made by the brake valve or in some other way, the triple valve moves into emergency position. The pressure in chamber *H* of the triple valve reduces suddenly and the greater auxiliary-reservoir pressure in chamber *R* causes piston *4* to move rapidly to the extreme left of its chamber, moving the slide valve and graduating valve with it. The graduating spring is compressed and the triple piston rests firmly against the cylinder-cap gasket *22*. When the slide valve is in emergency position, the service ports do not register. The end of the slide valve uncovers port *t* in the slide-valve seat, which allows auxiliary-reservoir air to pass into the chamber above the emergency piston, forcing this piston down and thus unseating the emergency valve *10*. This allows the air in chamber *Y* to escape to the brake cylinder; then brake-pipe air in passage *a* raises the check-valve *15* and flows into the brake cylinder in large volume through chambers *Y* and *X* and passage *C*. This produces a local reduction in brake-pipe pressure, which causes the next triple valve to operate quick-action, and so on throughout the train. At the same time port *d* in the slide valve registers with port *c* in the seat and allows air in the chamber back of the by-pass piston *25* to escape to the brake cylinder through ports *c*, *d*, *n*, *r*, and *C*. The pressure in the chamber back of the by-pass piston *25* will be considerably reduced and the by-pass piston will be moved backwards by the auxiliary-reservoir pressure in the chamber in front of it. This movement of the by-pass piston will unseat the by-pass valve *27* and thus connect the supplementary reservoir with the auxiliary reservoir through ports *x*, *f*, and *g*. This gives, in effect, an auxiliary-reservoir volume approximately three times the size of the one that supplies air to the brake cylinder during a service application of the brake.

During an emergency application, communication between the auxiliary reservoir and the brake cylinder is established through port *s* in the slide valve and port *r* in the seat.

Check-valve *15* will remain unseated until the brake-cylinder pressure is nearly equal to the brake-pipe pressure; the emergency valve *10* will be seated as the auxiliary and brake-cylinder pressures equalize; and the by-pass valve will remain unseated until the auxiliary-reservoir and brake-cylinder pressures are nearly equal to the pressure remaining in the supplementary reservoir. This action will result in a brake-cylinder pressure nearly equal to maximum brake-pipe pressure, and as cavity *q* in the slide valve is moved from over port *r* the safety valve is no longer connected to the brake cylinder; consequently, the high brake-cylinder pressure will be maintained until the brake is released in the usual manner.

PASSENGER-BRAKE TEST

Rack Tests.—In Fig. 1 are shown the results of standing train tests made with the high-speed and the LN equipments,

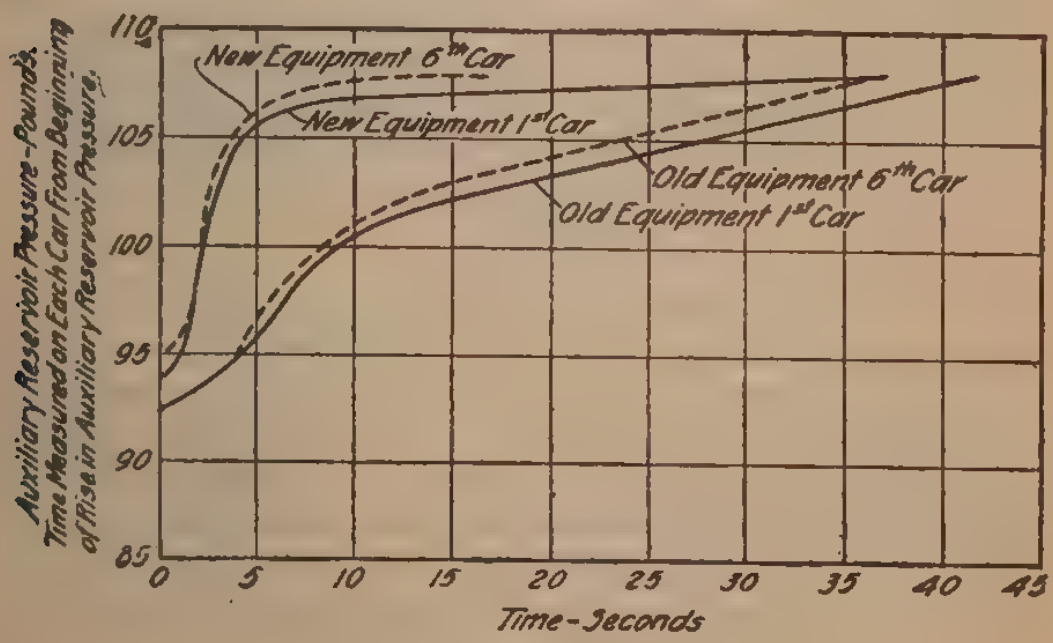

FIG. 1

to determine the comparative time required to recharge the auxiliary reservoir after a 20-lb. service reduction has been made. The six-car trains carried 110-lb. brake-pipe pressure

and were equipped with old or high-speed, brake and new, or LN equipments. The brake-valve handle was placed in full release for 6 sec. and then returned to running position. The LN equipment required only 4.4 sec. to raise auxiliary-reservoir pressure to 105 lb. pressure, whereas the high-speed brake equipment with P triple valves required 27 sec. The slow rate of charging with P triples is due to the fact that the rise in auxiliary pressure cannot exceed the rise in brake-pipe pressure. The rapid rise of auxiliary pressure with the LN equipment, shows the ability of this equipment to make a number of successive applications and releases with excessive reduction of the resultant brake-cylinder pressure.

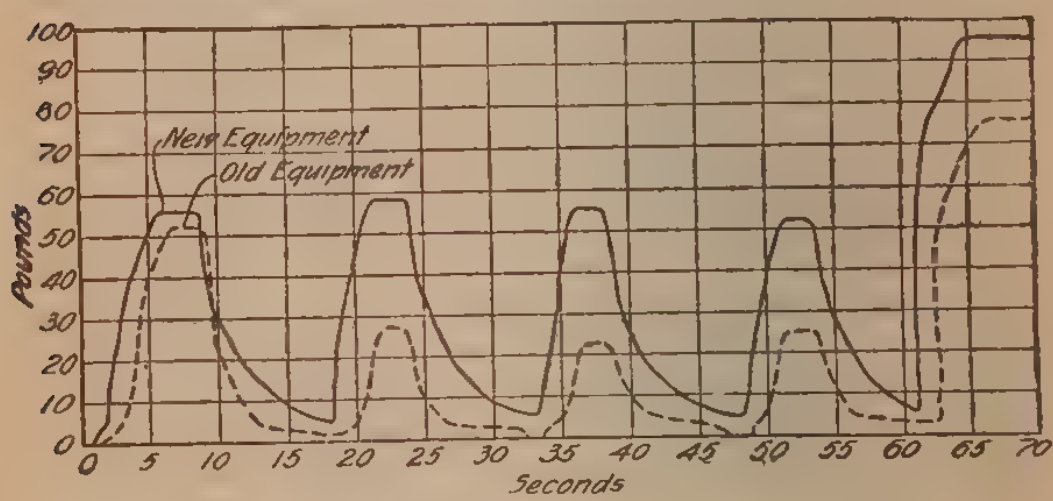

FIG. 2

In Fig. 2 are shown the results of rack tests of the old, or high-speed, and new, or LN, equipments, with 110-lb. brake-pipe pressure. This chart shows the curves produced on the brake-cylinder cards by four 20-lb. service applications and releases and one emergency application made 15 sec. apart. With the LN equipment, the brake-cylinder pressure on the fourth application had only reduced 4 lb.; with the old equipment, the brake-cylinder pressure dropped to 28 lb. on the second application. This difference with the old equipment, was due to the brake-pipe charging to a higher pressure than the auxiliaries. The quick-recharge feature of the L triple valves overcame this. The curves also show that the cylinder pressure reached maximum pressure much sooner with the L triples than with

the P triples. This is due to the fact that brake-pipe and auxiliary pressures are practically balanced in the new equipment at the time of application so that the triple valve responds at once. With the P triples, the excess brake-pipe pressure had to be drawn off before the triples would respond to the reduction.

In Fig. 3 are shown the results of rack tests of the old, or high-speed, and new, or LN, equipments, with 110 lb. brake-pipe pressure, when emergency applications are made. These curves illustrate the high emergency and the retaining features of the LN equipment. This equipment gives a brake-cylinder pressure of 104 lb. in about 4.5 sec. and maintains it constant

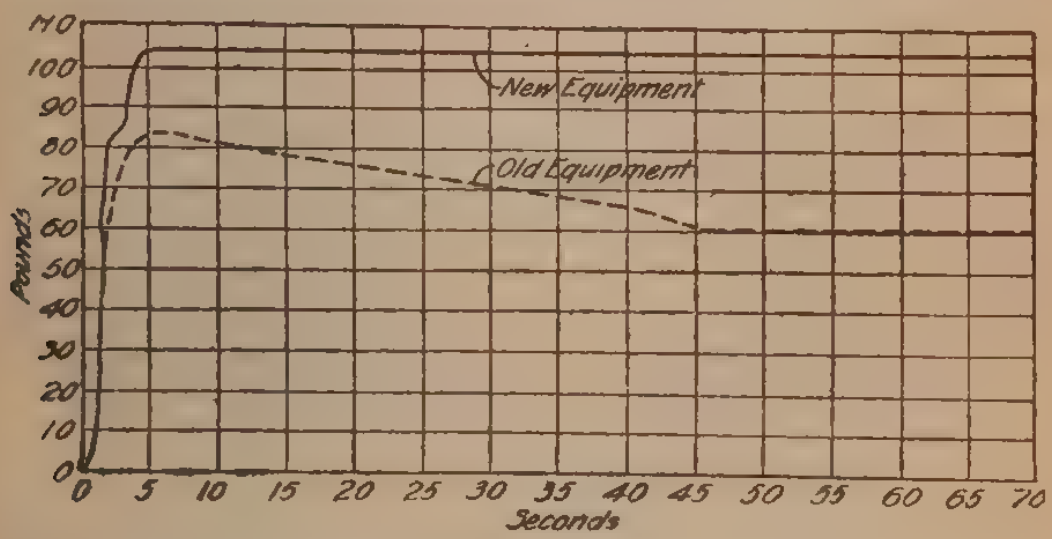

FIG. 3

throughout the stop; the old equipment gives a maximum of 83 lb. in about 5 sec., but this pressure gradually decreases to 60 lb. in about 45 sec.; the pressure though is maintained constant thereafter. For the same initial brake-pipe pressure, therefore, the LN equipment gives 21 lb. higher maximum brake-cylinder pressure, and 32.5 lb. average pressure for the first 45 sec. After 45 sec., the LN equipment gives 44 lb. greater brake-cylinder pressure. This greater pressure throughout the stop is provided to compensate for the lowered coefficient of friction between the brake shoes and the wheels that results from the increased amount of work required from each brake shoe with the LN equipments.

In Fig. 4 are shown the pressures in the brake cylinder, brake-pipe, and auxiliary reservoir of an LN equipment that has 110 lb. brake-pipe pressure, when a 30-lb. service reduction is followed by an emergency application and release. The curves show that it required about 6.5 sec. to make the 30-lb. brake-pipe reduction in this case. This reduced auxiliary

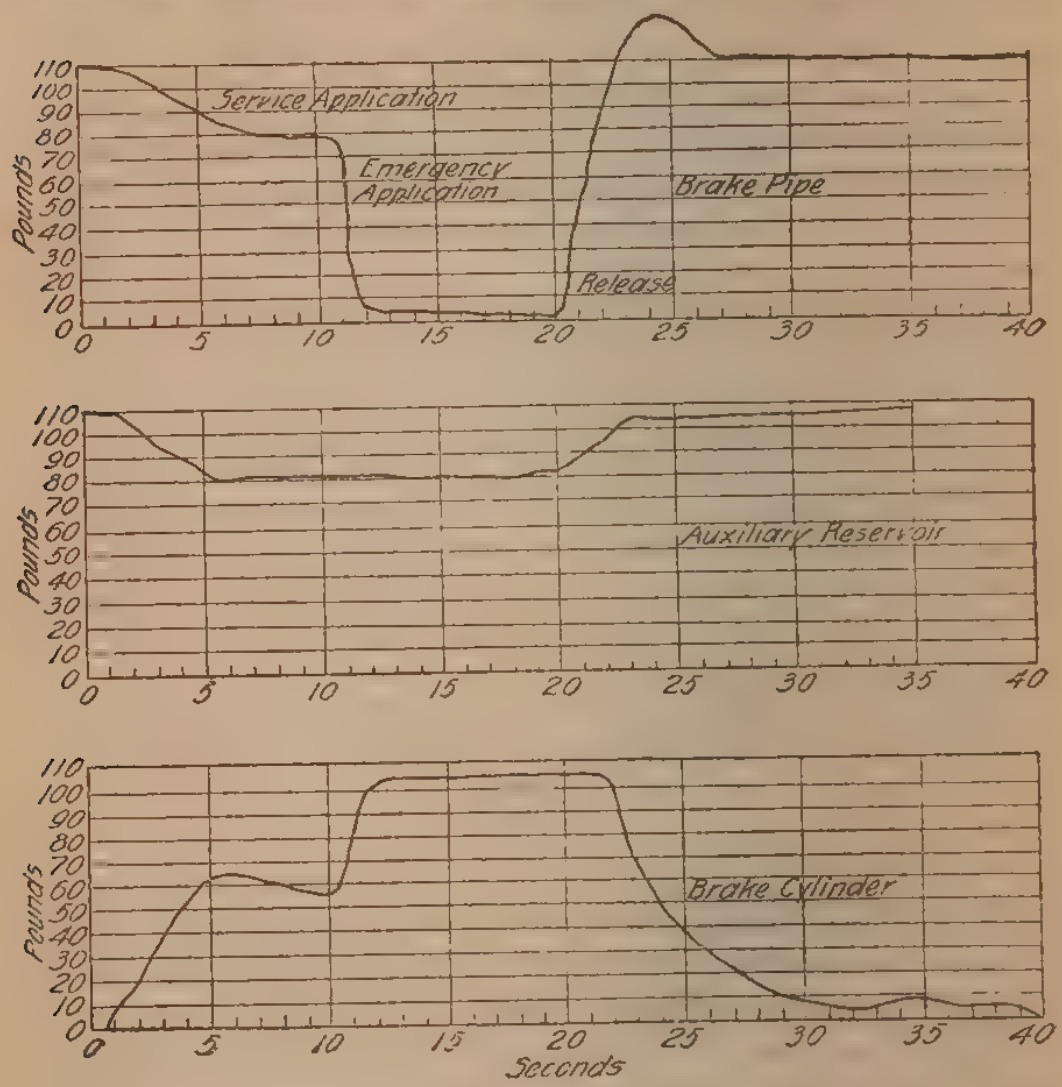

FIG. 4

pressure to 82 lb. and gave a brake-cylinder pressure of over 60 lb. After about 10.5 sec. from the beginning of the application, an emergency application was made reducing brake-pipe pressure to 0, and raising the brake-cylinder pressure to 104 lb., but without further reducing auxiliary reservoir pressure; 20 sec. from the beginning of the application, a release

was made and in about 3 sec. the brake pipe and the auxiliary reservoir recharged to practically normal pressure.

Standing Tests.—In Fig. 5 are shown the results of emergency applications made while the train is standing. The first car having the new, or LN, equipment used 90 lb. brake-pipe pressure; the first car having the old equipment used 110 lb. brake-pipe pressure. The chart shows that the new, or LN, equipment gave a greater emergency average brake-cylinder pressure for the stop than the old equipment though the latter carried 20 lb. greater brake-pipe pressure.

Running Tests.—The emergency application and retardation curves for two engines alone and ten cars alone in break-away tests, and for an entire train of two engines and ten cars are

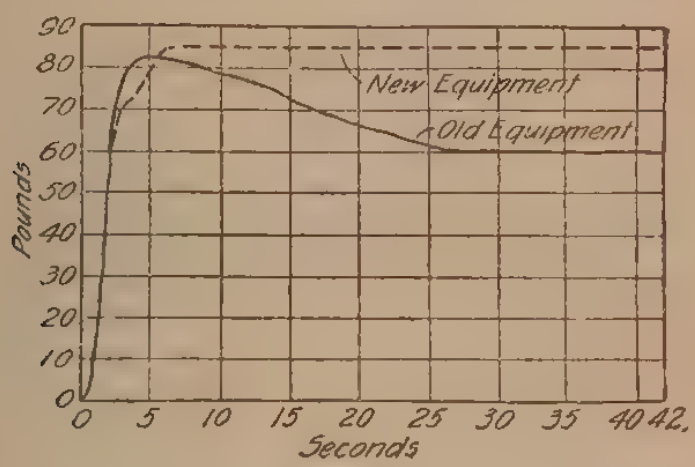

FIG. 5

shown in Fig. 6; the brake-pipe pressure was 110 lb. One train equipped with the old, or high-speed, apparatus was stopped from a speed of 84.2 mi. per hr., and the other, equipped with the new, or LN, equipment, was stopped from a speed of 82 mi. per hr. Retardation curves *1* and *2* are for the high-speed equipment engines alone, and for the cars alone in a break-away test, the engine having been cut off at the point of brake application in each case. Retardation curve *3* is for the train entire, consisting of the two engines and the ten cars. For the LN equipment, *4* is the retardation curve for the engine alone, *5* the curve for the cars alone, and *6* the curve for the entire train. The curves show the difference in holding power of the engines and car brakes for both equipments; also, the

difference in holding power of the two types of brakes. The engines with the high-speed equipment, curve *1*, passed the point at which the cars stopped, curve *2*, at a speed of about 53 mi. per hr. and with a wrecking energy of 110,000 ft.-lb. per 1,000 lb. of engines. The engines with the LN equipment, curve *4*, passed the point at which the cars stopped, curve *5*, at a speed of about 55 mi. per hr., and with a wrecking energy of 108,000 ft.-lb. per 1,000 lb. of engines. This shows clearly

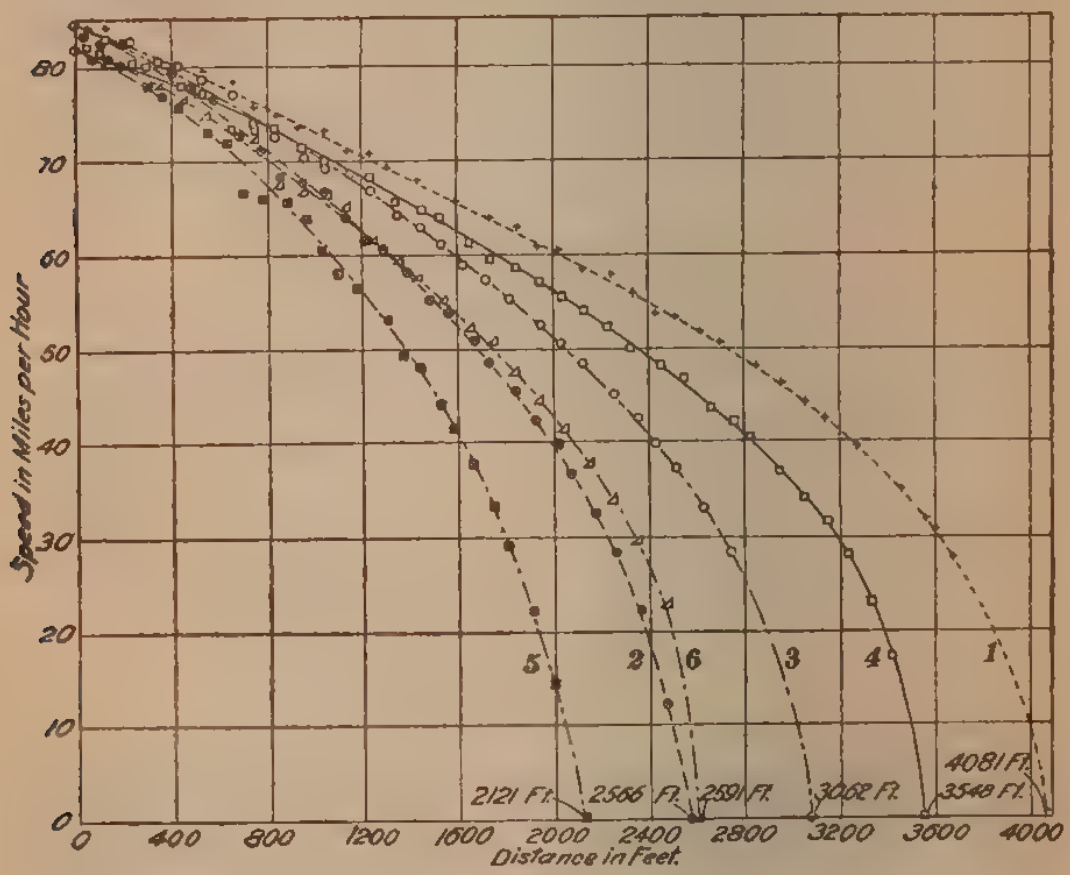

FIG. 6

that the efficiency of the car brakes is much greater than that of the locomotive brake, due to the unbraked weight of the locomotive and to its relatively low per cent. of braking power. The train with the high-speed equipment, curve *3*, passed the point at which the train with the LN equipment stopped, curve *6*, at a speed of about 36.5 mi. per hr. and a wrecking energy of about 48,000 ft.-lb. per 1,000 lb. of train.

The comparative retardation curves for an eight-car train, when service applications are made, are shown in Fig. 7.

The old, or high-speed, equipment train had a brake-pipe pressure of 110 lb. and the new, or LN, equipment train, a brake-pipe pressure of 90 lb. The old-equipment train was

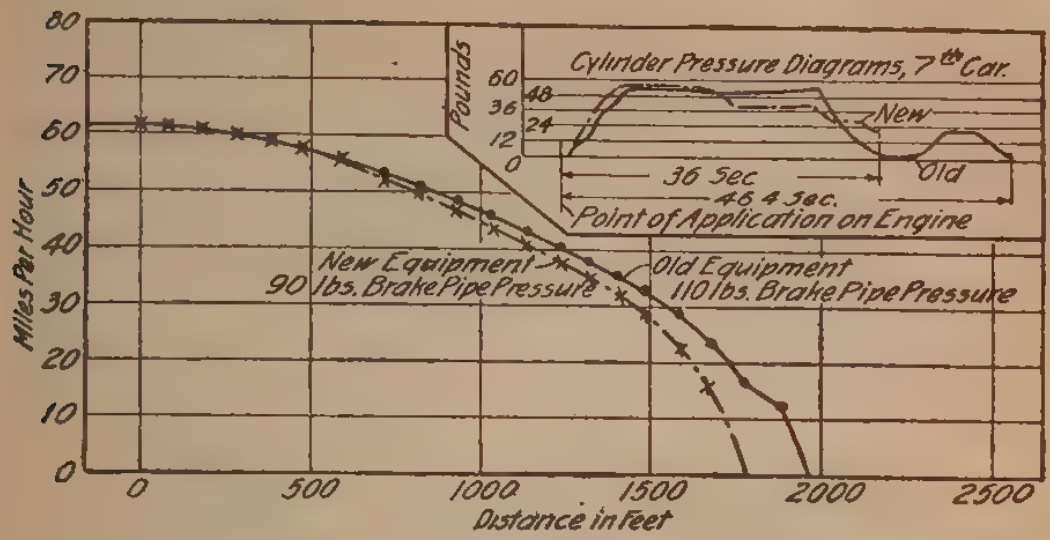

FIG. 7

stopped with two applications as will be seen by the cylinder-pressure diagrams; with the new equipment, the brake was first applied heavily and graduated off as the end of the stop was approached.

The comparative retardation curves for an eight-car train, when emergency applications are made, are shown in Fig. 8.

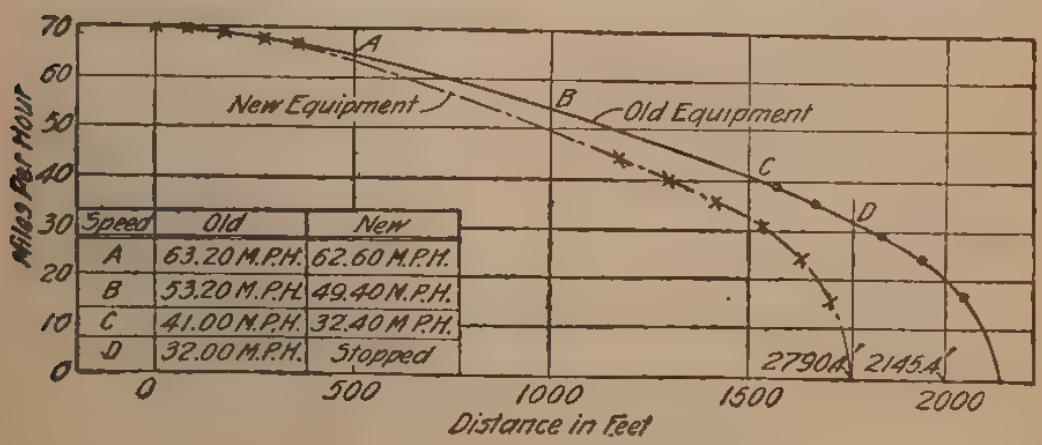

FIG. 8

The brake-pipe pressure was 90 lb. and the total weight of the train was 532.5 T. The curves show that when the train equipped with the old, or high-speed, equipment passed the

point at which the new-equipment train had stopped, its speed was 32 mi. per hr. and it had a wrecking energy of 35,810,000 ft.-lb. It passed the point at which the new-, or LN-, equipment train stopped, 7.5 sec. before the new-equipment train reached that point. It was running at over 20 mi. per hr. and had a wrecking energy of over 14,000,000 ft.-lb. at the instant the new-equipment train stopped. It ran over 100 ft. after the other train stopped. The total work done, in foot-pounds per second, was 3,014.5 with the new brake and 2,442 with the old. The work per brake shoe was 27 ft.-T. per sec. with the new and 21 ft.-T. per sec. with the old.

CLEANING TRIPLE VALVES

Triple valves should be inspected and thoroughly cleaned at least once every 3 mo. The main piston and attached valves should be immersed in kerosene while cleaning the other parts. Remove and examine the emergency parts, then clean and replace them without oiling, as they are seldom used and the oil will only serve to collect dirt. The slide valve and main-piston chamber should be cleaned with kerosene and a piece of cloth, and care should be taken not to leave any lint clinging to the parts. All the grooves and ports should be thoroughly cleaned by means of a pointed, hardwood stick to remove the gum from the grooves. Give the triple-piston chamber and slide-valve seat a light coat of oil. Then remove the parts from the kerosene, and clean the slide valve and graduating valve. The main-piston packing ring should be worked around until all the dirt is removed from it; it should not be removed from the piston unless a new ring is to be applied. Care should be taken to wipe all parts perfectly dry before lubricating them, because, if any kerosene is left in the triple or on any of the parts, it will tend to destroy the lubricating qualities of the lubricant. Also, care should be taken not to apply too much oil or grease, as practical experience has shown this to be one of the chief causes for undesired quick action. The face of the slide valve and graduating valve and the main-piston packing ring should be lightly lubricated with oil

provided for that purpose, and these parts put back into place. See that the graduating spring and sleeve work properly, and that all gaskets are in good condition; a defective gasket should be replaced with a new one. Examine and clean the by-pass valve and piston of the type L triple valve and replace without oiling. If the rubber seat of either the emergency valve or the by-pass valve is defective, a new one should be substituted. The safety valve of the type L triple valve should also be taken apart and cleaned, and reassembled without oiling. The safety-valve and brake-pipe strainers should be thoroughly cleaned. After the triple valve has been cleaned and put together, it should be tested on the triple-valve test rack.

TRIPLE-VALVE EQUIPMENT

In the accompanying table the approximate light weights for cylinder sizes specified are calculated for 50-lb. cylinder pressure for all types of equipment—plain and quick-action triple valves, and ET engine and tender equipments—and for a total leverage not to exceed 9 to 1.

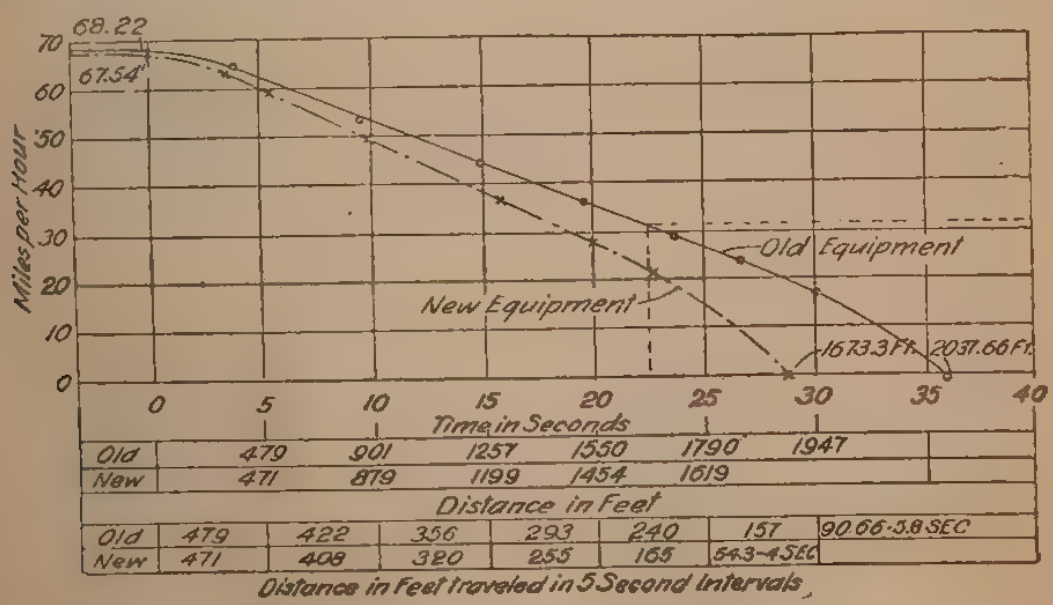

FIG. 1

Comparative speed-time-retardation curves for an eight-car train, when emergency applications are made, are shown in

PROPER TRIPLE VALVES, AUXILIARY RESERVOIRS, AND BRAKE CYLINDERS FOR LOCOMOTIVES, TENDERS, AND CARS OF DIFFERENT WEIGHTS

Type of Brake Equipment	Diameter of Cylinders Inches	Approximate Light Weights for Cylinders for Sizes Specified Pounds	Type of Triple Valve	Size of Auxiliary Reservoir Inches
Driver brakes for all locomotives, with or without truck brake or high-speed attachments	8	Determined by conditions and design of brake	F-1	10×33
	10		F-1	12×33
	12		F-2	14×33
	14		F-2	16×33
	16		F-2	16×42
	18		F-2	16×48
Truck brakes for all locomotives	6	Determined by special conditions	Driver brake triple operates truck brake	10×14½
	8			10×20
	10			10×28
	12			12×27
With quick-action triple valve		15,000 to 26,000		
		26,000 to 41,000		
		41,000 to 59,000		
	14×12	59,000 to 81,000	P-2	14×33
	16×12	81,000 to 106,000	P-2	16×33
Freight-engine tenders with plain triple valve	8×12	15,000 to 22,000	F-1	10×24
	10×12	22,000 to 35,000	F-1	12×27
	12×12	35,000 to 50,000	F-2	12×33
	14×12	50,000 to 69,000	F-2	14×33
	16×12	69,000 to 90,000	F-2	16×33

ET equipment, all classes	8×12 10×12 12×12 14×12 16×12	15,000 to 28,000 28,000 to 44,000 44,000 to 63,000 63,000 to 86,000 86,000 to 113,000	None	None
Passenger cars without supplementary reservoirs	6×12 8×12 10×12 12×12 14×12 16×12 18×12	Up to 16,000 16,000 to 28,000 28,000 to 44,000 44,000 to 63,000 63,000 to 86,000 86,000 to 113,000 113,000 to 143,000	P-1 P-1 or L-1 P-1 or L-1 P-2 or L-2 P-2 or L-2 P-2 or L-2 L-3	10×14½ 10×24 12×27 12×33 14×33 16×33 16×38
Passenger cars with supplementary reservoirs	8×12 10×12 12×12 14×12 16×12 18×12	16,000 to 25,000 25,000 to 39,000 39,000 to 56,000 56,000 to 77,000 77,000 to 100,000 100,000 to 127,000	L-1 L-1 L-2 L-2 L-3 L-3	10×24 12×27 12×33 14×33 16×33 16×48
Freight cars, combined equipment	6× 8 8× 8 8×12 10×12	Up to 21,000 22,000 to 30,000 22,000 to 37,000 37,000 to 58,000	H-1 or K-1 H-1 or K-1 H-1 or K-1 H-2 or K-2	Standard cast iron reservoir
Freight cars, detached equipment	8× 8 8×12 10×12	Up to 21,000 22,000 to 37,000 37,000 to 58,000	H-1 or K-1 H-1 or K-1 H-2 or K-2	Standard cast-iron reservoir

Fig. 1; the brake-pipe pressure was 90 lb. These curves show the speed-time and speed-distance relations existing throughout the stop.

A chart showing the progress of air-brake efficiency, as indicated by the comparative distances in which a train made up

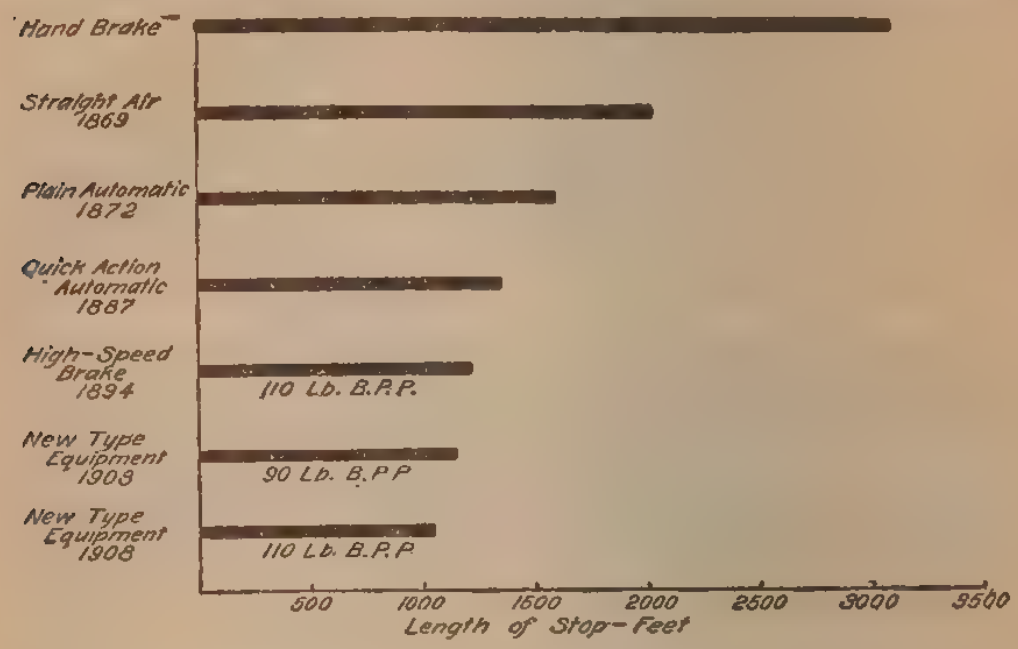

FIG. 2

of a locomotive and six cars has been stopped from a speed of 60 mi. per hr. for various types of equipment is given in Fig. 2.

BRAKE-PIPE VENT VALVE

The brake-pipe vent valve, here shown, is furnished when ordered with either ET or old automatic (schedule FL) tender-brake equipments. For a complete installation, a 10″×24″ reservoir, Piece No. 3,091, is required, and with ET equipments, a brake-pipe air strainer with a ¾-in. side opening. The weight is 27 lb. This valve is intended for use in place of the triple valve on tenders of engines that are to be used in double-heading or as helpers in a train. The vent valve requires a 10″×24″ reservoir. As a vent valve is much less sensitive than a quick-action triple valve, this apparatus can be used wherever brake-pipe venting is desired, with

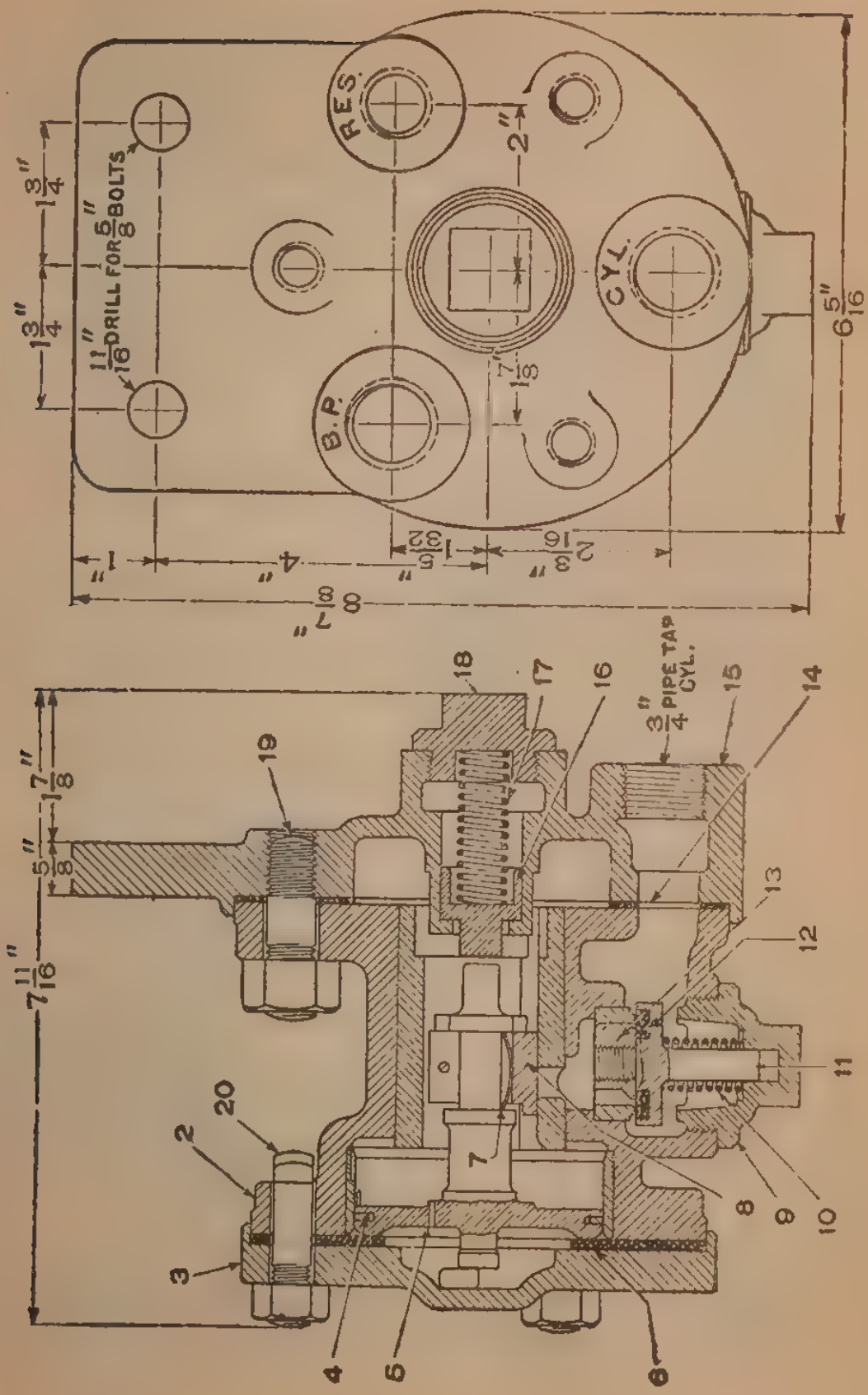
R.E.S.
B.P.
CYL.
11/16" DRILL FOR 5/8" BOLTS
1 3/4"
1 3/4"
2"
1 1/8"
6 5/16"
8 7/8"
7"
1"
4"
1 5/32"
2 3/16"
4"
3/4" PIPE TAP CYL.
7 11/16"
1 7/8"
5/8"
1 3/8"
1
2
3
4
5
6
7
8
9
10
11
12
13
14
15
16
17
18
19
20

entire freedom from undesired quick action. At the same time it insures the certainty of obtaining quick action through the entire train when desired. The piece number of the brake-pipe valve vent, complete, is 15,280. The piece and reference numbers of the various parts are given in accompanying list.

Pc. No.	*Ref. No.*	*Name of Part*
15,234	2	Body, bushed.
15,235	3	Cylinder cap.
10,030	4	Piston ring.
15,239	5	Piston, includes 4.
15,237	6	Cylinder-cap gasket.
15,246	7	Slide-valve spring.
15,240	8	Slide valve.
15,244	9	Check-valve cap.
15,245	10	Check-valve spring.
15,243	11	Check-valve, complete, includes 12 and 13.
10,417	12	Rubber seat for check-valve.
15,242	13	Check-valve guide.
15,273	14	Pipe-bracket gasket.
19,249	15	Pipe bracket, complete, includes 16, 17, 18, and 19.
16,288	16	Graduating sleeve.
18,286	17	Graduating spring.
14,357	18	Graduating-spring nut.
15,282	19	Stud and nut.
11,002	20	Bolt and nut, $\frac{1}{2}$ in. $\times 1\frac{3}{4}$ in,

DISTRIBUTING VALVES

NO. 5 DISTRIBUTING VALVE

The No. 5 distributing valve is a part of, and is regularly supplied with, the No. 5 ET locomotive brake equipment. An exterior view of the distributing valve and the reservoir is shown in Fig. 1; in Fig. 2 is shown a cross-section through the valve. The piece number of the valve, complete, with reservoir, is 13,017; without the reservoir, 13,018. The piece and reference numbers of the various parts are given in the accompanying list.

Pc. No.	*Ref. No.*	*Name of Part*
12,809	2	Body, bushed, includes Piece No. 3526.
14,283	3	Application-valve cover, includes Piece No. 1635.
6,268	4	Cover screw.

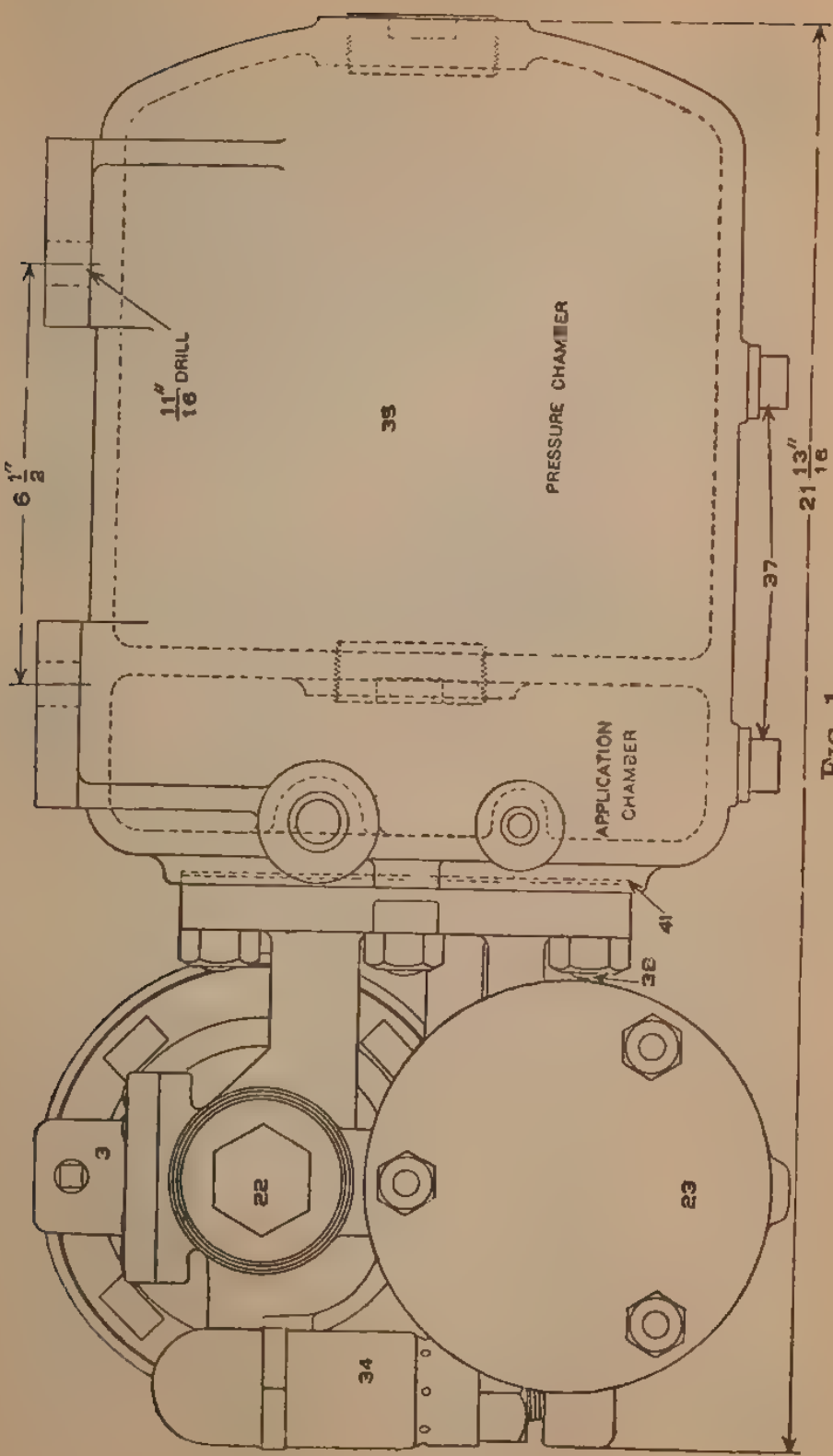
11/16" DRILL
6 1/2"
39
PRESSURE CHAMBER
APPLICATION CHAMBER
37
21 13/16"
41
38
3
22
23
34

FIG. 1

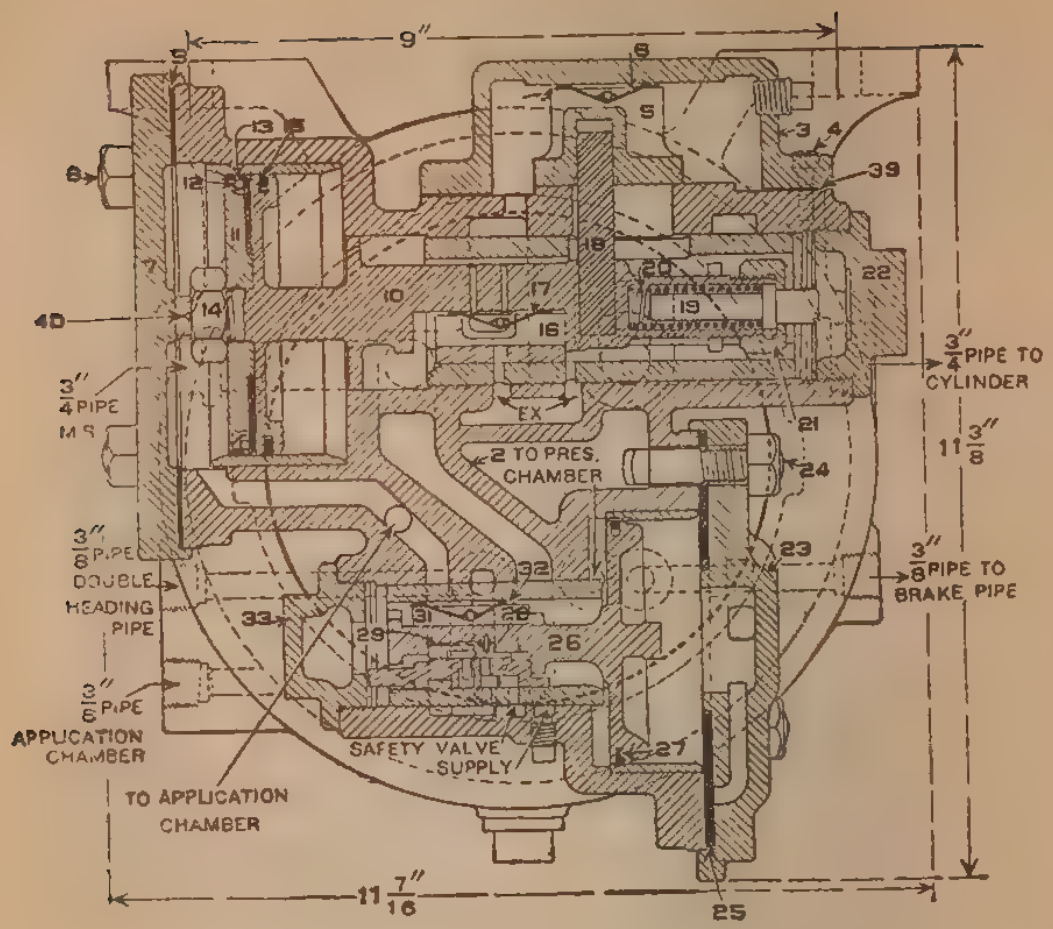

FIG. 2

Pc. No.	*Ref. No.*	*Name of Part*
10,918	5	Application valve.
14,281	6	Application-valve spring.
10,872	7	Application-cylinder cover.
10,836	8	Cylinder-cover bolt and nut.
10,870	9	Cylinder-cover gasket.
12,271	10	Application piston, includes 15.
10,914	11	Piston follower.
10,920	12	Packing-leather expander.
10,913	13	Packing leather.
10,915	14	Application-piston nut.
12,891	15	Application-piston packing ring.
10,917	16	Exhaust valve.
14,281	17	Exhaust-valve spring.
10,916	18	Application-valve pin.
10,919	19	Graduating stem.
1,523	20	Graduating spring.
9,283	21	Graduating-stem nut.
10,857	22	Upper cap nut.
12,348	23	Equalizing-cylinder cap.
10,836	24	Cylinder-cap bolt and nut.

Pc. No.	Ref. No.	Name of Part
10,869	25	Cylinder-cap gasket.
13,021	26	Equalizing piston, includes 27.
10,032	27	Equalizing-piston packing ring.
12,589	28	Graduating valve.
12,887	29	Graduating-valve spring.
12,588	31	Equalizing slide valve.
17,237	32	Equalizing slide-valve spring.
12,586	33	Lower cap nut.
10,526	34	E-1 safety valve, complete.
10,397	35	Double-chamber reservoir, complete, includes two of 37 and four of 36.
12,274	36	Reservoir stud and nut.
10,076	37	Reservoir drain plug.
3,526		Distributing-valve drain plug.
10,884	39	Application-valve cover gasket.
12,270	40	Application-piston cotter.
9,696	41	Distributing-valve gasket.
1,635		Pipe plug.

NO. 6 DISTRIBUTING VALVE

The No. 6 distributing valve with plain cylinder cap is a part of, and is regularly supplied with, No. 6 ET locomotive brake equipments. The quick-action cylinder cap is supplied only when specially ordered; its weight, complete, with plain cap and reservoir, is 165 lb.; with quick-action cap and reservoir, 170 lb. The piece number of a No. 6 distributing valve, with plain cylinder cap, E-6 safety valve, and reservoir, complete, is 16,945; with quick-action cylinder cap, E-6 safety valve, and reservoir, complete, 16,946; with plain cylinder cap and E-6 safety valve, complete, without reservoir, 16,937; with quick-action cylinder cap and E-6 safety valve, complete, without reservoir, 16,938. The piece and reference numbers of the various parts are given in the accompanying list. In Fig. 3 is shown the arrangement of the valve and reservoir; in Fig. 4 is shown a cross-section through the valve; and in Fig. 5 is shown a section through the union stud, union nut, and union swivel.

Pc. No.	Ref. No.	Name of Part
19,338	2	Body, bushed.
16,521	3	Application-valve cover, includes 42
6,268	4	Cover screw.
16,940	5	Application valve.
14,281	6	Application-valve spring.
10,872	7	Application-cylinder cover.
10,836	8	Bolt and nut.

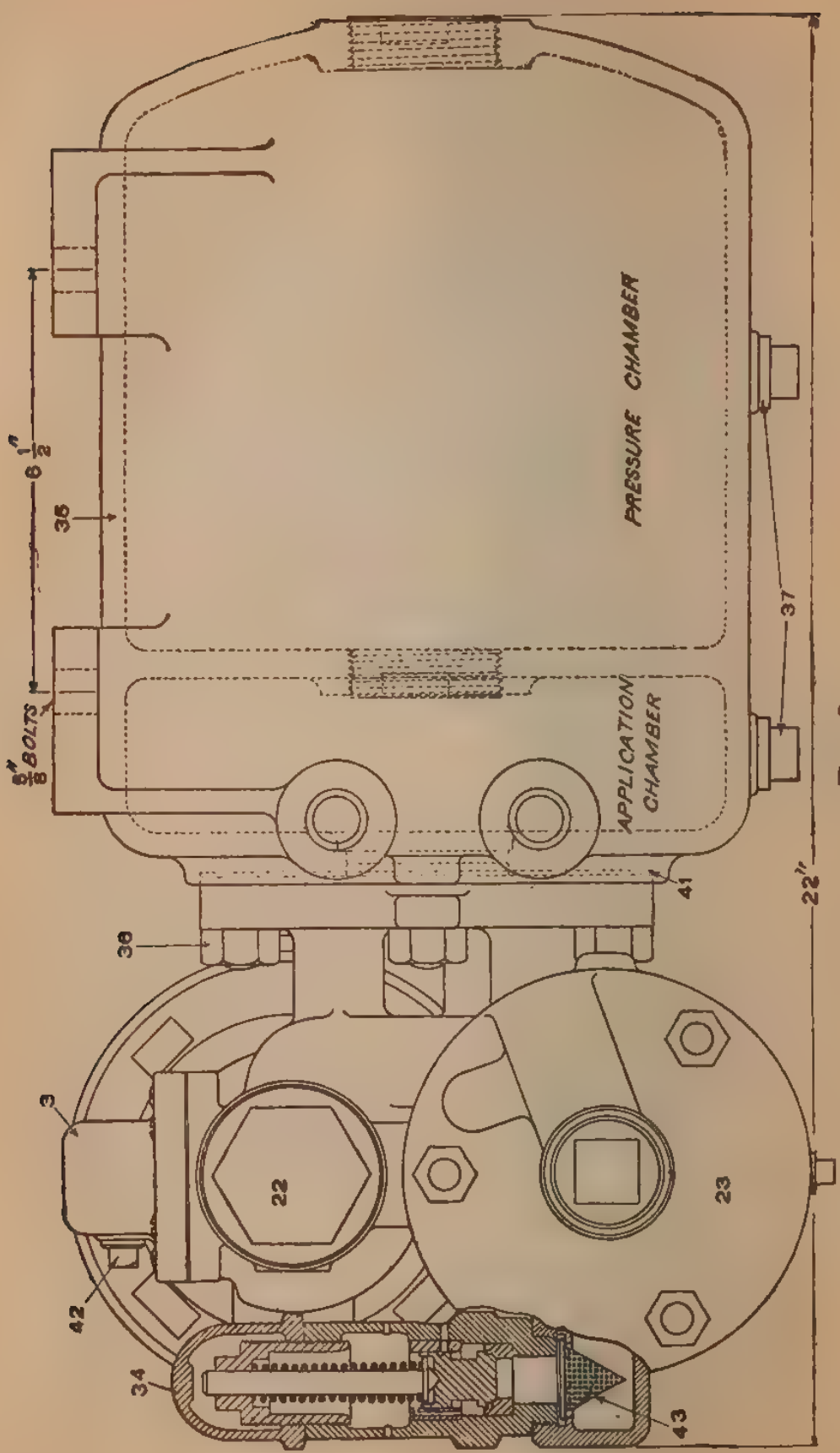
PRESSURE CHAMBER
APPLICATION CHAMBER
6 1/2"
5/8" BOLTS
36
37
38
41
22"
3
22
23
42
34
43

FIG. 3

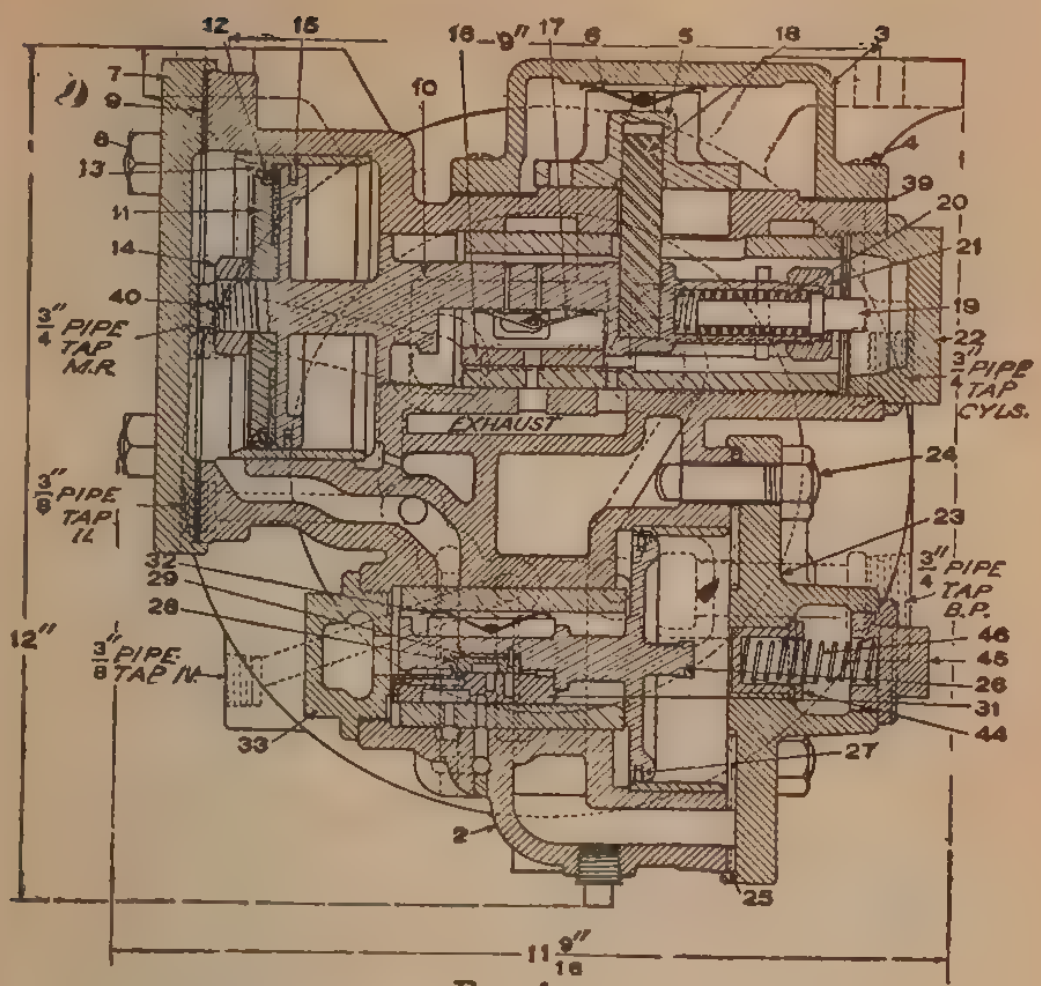

FIG. 4

Pc. No.	*Ref. No.*	*Name of Part*
10,870	9	Cylinder-cover gasket.
16,939	10	Application piston, includes 15.
43,605	11	Piston follower.
10,920	12	Packing expander.
10,913	13	Packing leather.
10,915	14	Application-piston nut.
12,891	15	Application-piston ring.
16,479	16	Exhaust valve.
14,281	17	Exhaust-valve spring.
16,482	18	Application-valve pin.
10,919	19	Application graduating stem.
1,523	20	Application graduating spring.
9,283	21	Application graduating stem nut.
16,481	22	Upper cap nut.
18,650		Plain cylinder cap, complete, includes 23, 44, 45, and 46.
18,649	23	Plain cylinder cap.
10,836	24	Bolt and nut.

Pc. No.	*Ref. No.*	*Name of Part*
16,491	25	Cylinder-cap gasket.
16,512	26	Equalizing piston, includes 27.
10,032	27	Equalizing-piston ring.
12,589	28	Graduating valve.
12,887	29	Graduating-valve spring.
18,601	31	Equalizing valve.
9,721	32	Equalizing-valve spring.
18,602	33	Lower cap nut.
15,890	34	E-6 safety valve, complete.
16,941	35	Double-chamber reservoir, complete, includes two of 37 and four of 36.
12,274	36	Reservoir stud and nut.
10,076	37	Reservoir drain plug.
16,520	39	Application-valve-cover gasket.
12,270	40	Application-piston cotter.
58,013	41	Distributing-valve gasket.
6,753	42	Oil plug.
16,214	43	Strainer.
13,251	44	Graduating sleeve.
14,357	45	Cap nut for plain cylinder cap.
1,811	46	Graduating spring for equalizing piston.
1,635		$\frac{1}{4}$-in. pipe plug.
18,365		Distributing-valve union connection, complete, includes 202, 203, and 204.
18,364	202	Union stud.
15,292	203	Union nut.
18,363	204	Union swivel.

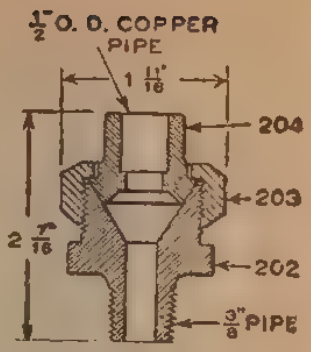

FIG. 5

No. 6 Distributing-Valve Quick-Action Cylinder Cap.—The quick-action cylinder cap, shown in Fig. 6, is used with the No. 6 distributing valve for engines that are to be used in double-heading service, or as helpers in a train, and is furnished only when specially ordered. It weighs 12 lb. The piece number of the cylinder cap, complete, is 16,528.

Pc. No.	*Ref. No.*	*Name of Part*
16,936	47	Cylinder cap, bushed.
16,526	48	Emergency valve.
15,244	49	Check-valve cap nut.
16,527	50	Valve stem.
15,242	51	Check-valve guide.
10,417	52	Rubber seat for check-valve.
15,243	53	Check-valve, complete, includes 51 and 52.
26,179	54	Check-valve spring.
1,811	55	Graduating spring.
16,524	56	Cap nut.
16,529	57	Emergency-valve spring.
17,605	58	Stop plug.

Union T.—The union **T**, shown in Fig. 7, is used in the application cylinder pipe that connects the distributing valve with the automatic and independent brake valves. The piece number of a ½-in. O. D. copper-pipe union **T**, complete, which includes 203, 204, and 205, is 18,366;

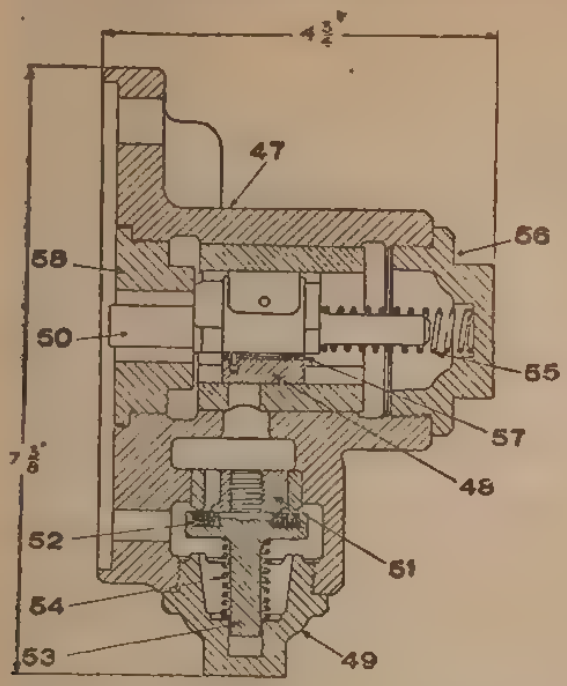

FIG. 6

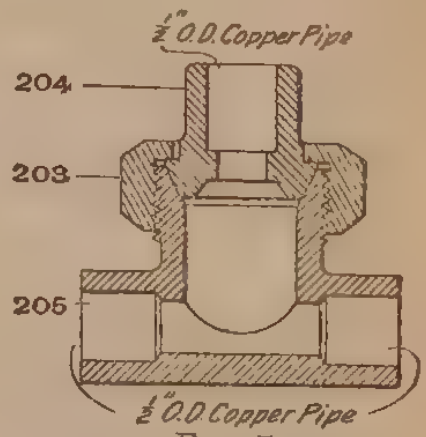

FIG. 7

the piece and reference numbers of the various parts are:

Pc. No.	*Ref. No.*	*Name of Part*
15,292	203	Union nut.
18,363	204	Union swivel.
18,362	205	Union **T**.

Spring Identification of No. 6 Distributing Valve

Pc. No.	Out. Dia. *A*, In.	Dia. Wire *B*, In.	Free Height *C*, In.	No. Coils	Material	Name of Spring
1,523	39/64	.08	2 5/8	13½	Nickeled Steel	Application-Graduating
1,811	39/64	.083	2½	12	Phosphor-Bronze	Equalizing-Graduating
26,179	27/32	.091	1 17/32	8½	Phosphor-Bronze	Quick-action Cylinder-Cap Check-Valve
24,113	41/64	.106	2 15/16	15½	Nickeled Steel	Safety-Valve

NO. 6 ET LOCOMOTIVE BRAKE

DEVELOPMENT OF ET BRAKE

When the straight-air brake was first put into service, the locomotive was not fitted with brakes lest the drivers might slide and flatten. However, the desire for maximum braking power for the train soon led to the use of a tender brake and, later, to a brake on the drivers. After the automatic brake superseded the straight-air brake, a truck brake was added, thus completing the locomotive equipment. The next step was to equip the locomotive with a straight-air brake in combination with the regular automatic air brake, thus providing the engineer with independent control of the locomotive brake, which greatly increased the flexibility and efficiency of the brake system as a whole.

Although the combined straight-air and automatic brake greatly increased the flexibility of control of the engine brake, especially in switching and in handling slack in freight service, it increased considerably the number of pieces that went to make up a complete locomotive brake equipment. Then the duplex main-reservoir regulation, the double-pressure control, and the high-speed brake equipment added more apparatus to the equipment, making it still more cumbersome. In fact, from the very adoption of the automatic brake, all improvements were made by adding apparatus to the equipment existing at the time; consequently, as the improvements progressed, the equipment became more and more complicated.

With the increase in speed and weight of trains, the conditions of train service necessitated still further improvements in the brake system. It was apparent that to meet the requirements by the addition of the necessary apparatus to the brake system then in general use would make the system too cumbersome. This naturally led to the design of a locomotive brake equipment that would include in one apparatus all the desirable features of the existing brake system and eliminate many of the undesirable features,

besides providing new features necessary to meet the requirements of prevailing conditions of road service. This new brake system is known as the *ET locomotive-brake equipment*, the letters ET being an abbreviation for engine and tender.

The ET locomotive brake equipment is adapted for all classes of engines and for all kinds of service, the only difference in the equipment for locomotives of different size or for different service being in the size of the brake cylinders used. It was introduced in 1905, and was known as the No. 5 ET *equipment*. The No. 6 ET equipment is an improvement on the No. 5 ET equipment, as it accomplishes in a simpler manner all that the No. 5 ET equipment does, besides introducing other features that experience with the No. 5 ET equipment has suggested.

The ET brake equipment differs materially from the older form of locomotive brake equipment. It consists of less apparatus, as many of the valves are replaced by others of different construction, and the method of its operation is somewhat different. The same air pump, main reservoirs, duplex gauge, and brake cylinders, together with their apparatus for carrying the power to the brake shoes, are left in service, but the older forms of automatic brake valve, slide-valve, feed-valve, and duplex governor are replaced by new ones; also, the independent brake valve takes the place of the older form of straight-air brake valve.

The distributing valve replaces the triple valves, auxiliary reservoirs, and high-speed reducing valves formerly used on the engine and tender, and a new form of slide-valve feed-valve fitted with the regulating device adapted for a quick change of pressures takes the place of the reversing cock and duplex feed-valve. The reducing valve for the independent brake-valve also acts as a reducing valve for the air-signal system so that the style of reducing valve formerly used with the signal system is dispensed with. The double check-valves used with the combined automatic and straight-air brake are also dispensed with in the ET equipment.

This new type of locomotive brake equipment can be applied to any locomotive, whether used in high-speed or

ordinary passenger service, double-pressure-control service, freight service, or any kind of switching service. It has all the advantages of the older types of brake equipment and many other important advantages found by practical experience to be necessary in modern locomotive brake service.

The locomotive brakes can be applied with a graduated, a full-service, or an emergency application. They can be applied and released in conjunction with the brakes on the cars or independently of them, and they can be released either wholly or partly at the will of the engineer. Also, it is possible to release the train brakes and hold the locomotive brakes applied full force. When double-heading, the brake on either locomotive can be applied or released by the engineer on that engine without affecting any other brake. This is a valuable feature, because it permits the engine brake to be released in case the drivers slide and applied again as soon as the wheels begin to turn.

The supply of air for the locomotive brake cylinders is taken direct from the main reservoir, and the distributing valve is designed so as to supply automatically brake-cylinder leakage, from the main reservoir, thus preventing the locomotive brakes from leaking off as they do when the brake-cylinder supply is taken from the auxiliary reservoir.

Neither the length of the brake-piston travel nor the brake-cylinder leakage affects the brake-cylinder pressure, and so long as the brake piston does not strike the non-pressure head of the cylinder or the brake rigging does not catch something that will prevent the power exerted on the piston from being transmitted to the brake shoes, the engine and tender brakes will be applied with the same pressure. If the brake is applied with the independent brake valve in order to prevent the engine from moving after being stopped, it will not leak off; and when standing on a down grade the locomotive brake can be applied independently to hold the train while the auxiliaries on the cars are being recharged.

PIPING ARRANGEMENT AND EQUIPMENT

The general arrangement of the various valves, pipes and pipe connections of the No. 6 ET equipment as applied to the locomotive is shown in the accompanying piping diagram.

The *discharge pipe* conveys the compressed air from the air pump to the first main reservoir.

The *reservoir connecting pipe* connects the two main reservoirs.

The *main-reservoir pipe* leads from the second main reservoir and serves as a supply pipe to deliver full main-reservoir pressure to the automatic brake valve, the distributing valve, the B-6 feed-valve, the C-6 reducing valve, the maximum-pressure governor, and the red hand of the large air gauge.

The *main-reservoir cut-out cock* is placed in the main-reservoir pipe so that main-reservoir air can be shut off from the brake system when it is necessary to remove any of the apparatus while the brake system is charged. It contains a small bleed hole that allows the air to escape from the piping to the atmosphere when the cock is closed.

The *governor pipe H* is connected to the main-reservoir side of the main-reservoir cut-out cock and leads to the maximum-pressure head of the duplex governor, so that this head of the governor is always subjected to main-reservoir pressure regardless of whether the cock is opened or closed.

The *distributing-valve supply pipe E* conveys main-reservoir air from the main-reservoir pipe to the distributing valve for use in the locomotive brake cylinders.

The *distributing-valve cut-out cock* in pipe *E* is for the purpose of cutting off the supply of main-reservoir air from the distributing valve when necessary.

The *pipe N* leads from the main-reservoir pipe to the red hand of the large air gauge, which registers main-reservoir pressure.

The *brake pipe* connects with the train brake pipe, so that it is in direct communication with all triple valves on the cars in the train. It connects with the automatic brake valve through the pipe *O*, and with the distributing valve through the pipe *F*.

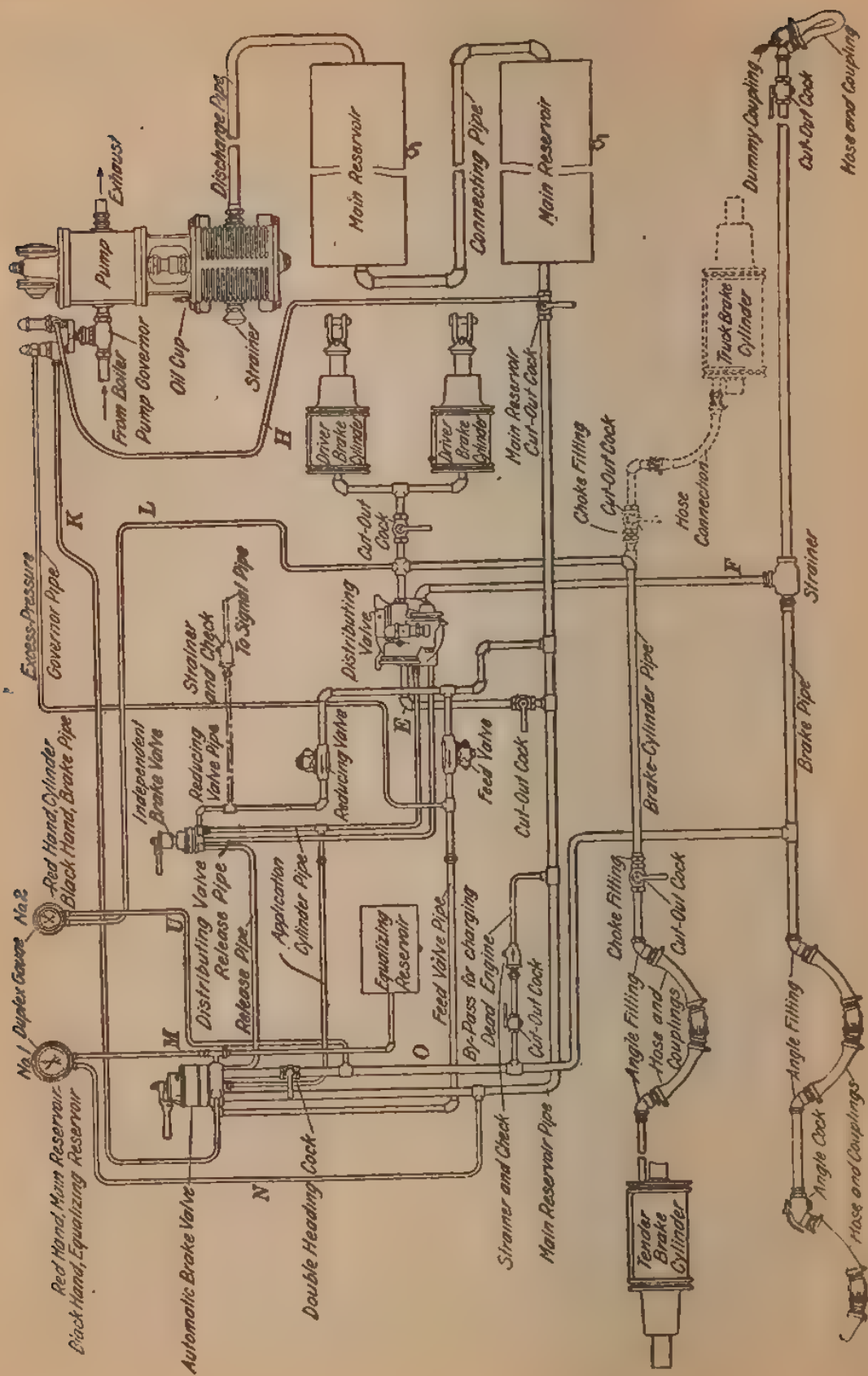
Exhaust
Pump
Discharge Pipe
Main Reservoir
Connecting Pipe
Main Reservoir
Dummy Coupling
Cut-Out Cock
Hose and Coupling
From Boiler
Pump Governor
Oil Cup
Strainer
Driver Brake Cylinder
Driver Brake Cylinder
Main Reservoir Cut-Out Cock
Truck Brake Cylinder
Choke Fitting
Cut-Out Cock
Hose Connection
H
K
L
Cut-Out Cock
Excess-Pressure Governor Pipe
Strainer and Check
To Signal Pipe
Distributing Valve
F
Strainer
Independent Brake Valve
Reducing Valve Pipe
Reducing Valve
E
Feed Valve
Cut-Out Cock
Brake-Cylinder Pipe
Brake Pipe
Red Hand, Cylinder
Black Hand, Brake Pipe
No. 2 Duplex Gauge
Distributing Valve
Release Pipe
Release Pipe
Application Cylinder Pipe
Equalizing Reservoir
Feed Valve Pipe
By-Pass for charging Dead Engine
Cut-Out Cock
Choke Fitting
Cut-Out Cock
U
M
O
No. 1 Duplex Gauge
Angle Fitting
Hose and Couplings
Angle Fitting
Red Hand, Main Reservoir
Black Hand, Equalizing Reservoir
Automatic Brake Valve
N
Double Heading Cock
Strainer and Check
Main Reservoir Pipe
Tender Brake Cylinder
Angle Cock
Hose and Couplings

The *double-heading cock* (in the brake pipe just under the brake valve) is for the purpose of cutting out the automatic brake valve from the brake pipe on the following locomotive of a double-header. It is closed when its handle is parallel with, and open when its handle is at right angles to, the pipe.

The *by-pass for charging dead engine* consists of a pipe leading from the brake pipe *O* to the main-reservoir pipe, together with a cut-out cock, a strainer, and a non-return check-valve. The purpose of this arrangement is to provide a means of supplying air for the distributing valve and brake cylinders of a dead engine (or one with a disabled air pump) from the supply in the brake pipe that is furnished by the other engine. When necessary to use the by-pass arrangement, the double-heading cock in the brake pipe must be closed and the cut-out cock in the by-pass pipe opened. When the by-pass arrangement is not in use, the cut-out cock in the by-pass pipe must be closed.

The *brake-cylinder pipe* leads from the distributing valve to the driver and tender brake cylinders; also it connects with the engine-truck brake cylinder when the engine is provided with a truck brake.

The *driver*, *tender*, and *truck-brake cut-out cocks* are for the purpose of cutting out their respective brakes in case the brake becomes disabled.

The *choke fittings* in the tender and truck brake-cylinder pipe have a restricted opening that will allow air to pass to and from the engine-truck and tender-brake cylinders fast enough to operate their brakes properly; but if the hose connections to these cylinders should burst or become uncoupled, the choke fitting will restrict the flow of air so that the distributing valve can hold the pressure up to the standard in the other brake cylinders; hence, the bursting of a tender- or truck-brake hose will not disable all the locomotive brakes during the stop.

The *B-6 feed-valve* reduces the main-reservoir pressure to the standard desired for use in the train brake pipe.

The *C-6 reducing valve* reduces the main-reservoir pressure to 45 lb. for use in the independent brake valve and in the air-signal system.

The *feed-valve pipe* leads from the B-6 feed-valve to the pipe bracket of the automatic brake valve and conveys air at feed-valve pressure to the automatic brake valve.

The *excess-pressure governor pipe* leads from the feed-valve pipe to the chamber above the diaphragm in the excess-pressure head of the duplex governor.

The *reducing-valve pipe* conveys air at a pressure of 45 lb. from the C-6 reducing valve to the independent brake valve and the air-signal pipe. A branch pipe leads from the reducing-valve pipe to the combined strainer and check-valve through which air passes to the signal pipe.

The *gauge pipe L* conveys air from the brake-cylinder pipe to the red hand of the small duplex gauge, which thus registers the pressure in the locomotive brake cylinders.

The *governor pipe K* leads from the pipe bracket of the automatic brake valve to the chamber below the diaphragm in the excess-pressure head of the duplex governor. It supplies air at main-reservoir pressure to this chamber when the automatic brake valve is in release, running, or holding position.

The *gauge pipe U* is connected to the brake pipe below the double-heading cock and leads to the black hand of the small duplex gauge. The black hand of this gauge therefore registers brake-pipe pressure at all times, whether the double-heading cock is open or closed.

The *equalizing-reservoir pipe* connects chamber *D* of the automatic brake valve to the equalizing reservoir.

The *gauge pipe M* leads from the equalizing-reservoir connection of the brake valve to the black hand of the large duplex gauge. The black hand of this gauge therefore registers equalizing-reservoir pressure at all times.

The *application-cylinder pipe* connects the automatic and independent brake valves with the application cylinder of the distributing valve.

The *distributing-valve release pipe* leads from the application-cylinder exhaust of the distributing valve to the independent brake valve.

The *release pipe* extends from the automatic brake valve to the independent brake valve and connects the automatic brake valve with the application-cylinder exhaust port of the

distributing-valve through the independent brake valve and the distributing-valve release pipe when the independent brake valve is in running position.

The *automatic brake valve* is for the purpose of operating the locomotive and train brakes.

The *independent brake valve* is for the purpose of operating the locomotive brakes only.

The *distributing valve* controls the flow of air to and from the locomotive brake cylinders. It is the most important feature of the ET equipment and takes the place of the engine and tender triple valves, their auxiliary reservoirs, and the high-speed reducing valves used with the former type of locomotive brake.

DESCRIPTION AND OPERATION

DESCRIPTION OF VALVE

The No. 6 distributing valve with its double-chamber reservoir is the most essential part of the ET equipment. This valve operates the locomotive brakes only. It takes

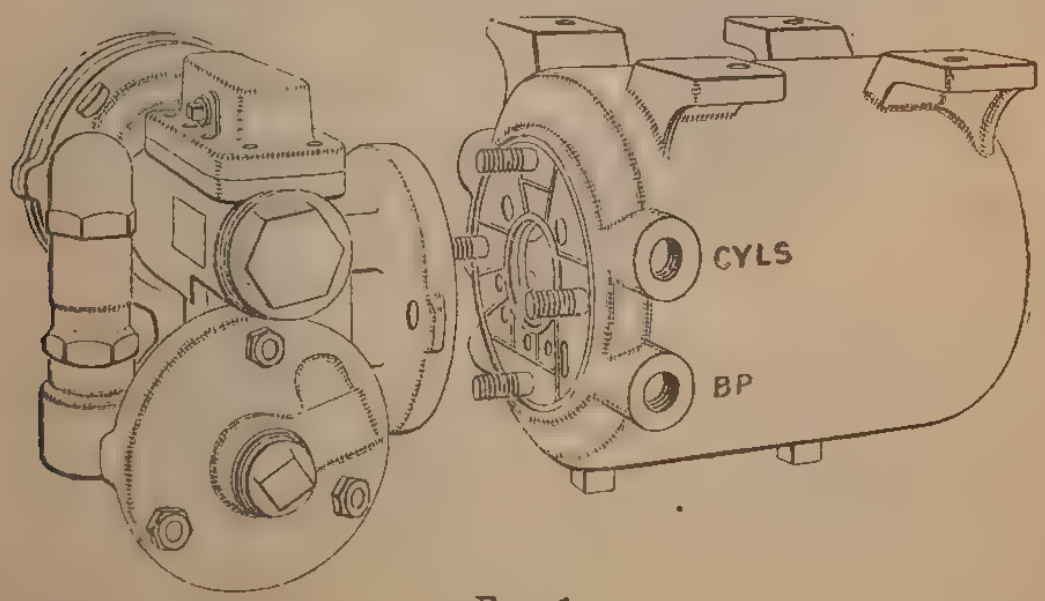

FIG. 1

the place and performs all the functions of the triple valves, auxiliary reservoirs, double check-valves, and high-speed reducing valves used with the former types of locomotive

brake. Fig. 1 shows the dividing line between the distributing valve and its double-chamber reservoir. The distributing valve (the piece to the left) is directly connected to the double-chamber reservoir, and all the pipe connections, of which there are five, are made to the reservoir so that the distributing valve can be separated from its double-chamber reservoir without disturbing any of the pipe connections.

Fig. 2 is a side view of the double-chamber reservoir sectioned in such a manner as to show the partition between the pressure chamber and the application chamber, as well as the relative sizes of these chambers. This view also shows the

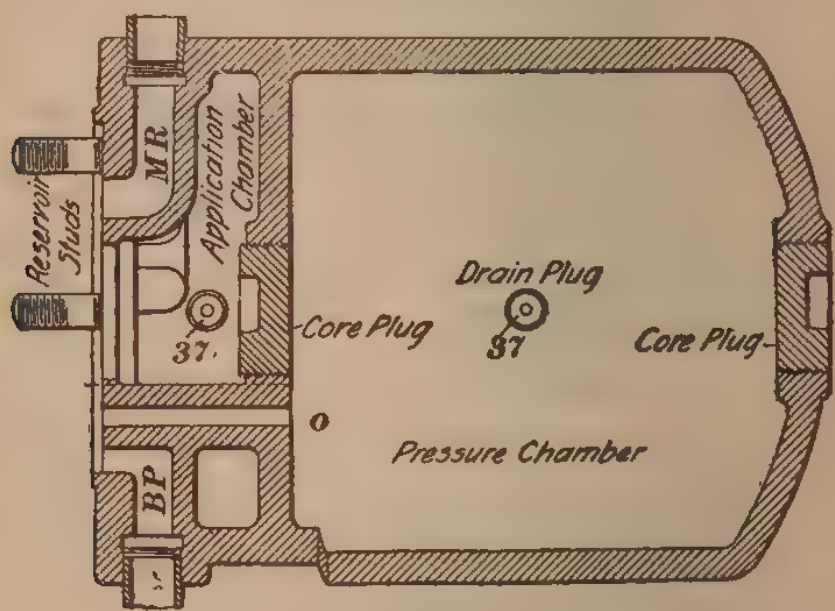

FIG. 2

ports *MR*, *BP*, and *o*, and the core and drain plugs. The pressure chamber represents an auxiliary reservoir, and the application chamber, combined with the application cylinder of the distributing valve, represents a brake cylinder. These chambers have the relative proportions to each other of an auxiliary reservoir and its proper brake cylinder with 8 in. of piston travel; thus, when the pressure chamber is charged with air at 70 lb. per sq. in., the same as that in the brake pipe and auxiliaries on the train, the volume of air therein will equalize in both chambers at 50 lb., and in that proportion at every other auxiliary-reservoir pressure. The volume

of the application cylinder of the distributing valve is included in the volume of the application chamber at all times except when the equalizing slide valve is in emergency position, at which time the equalizing valve closes communication between

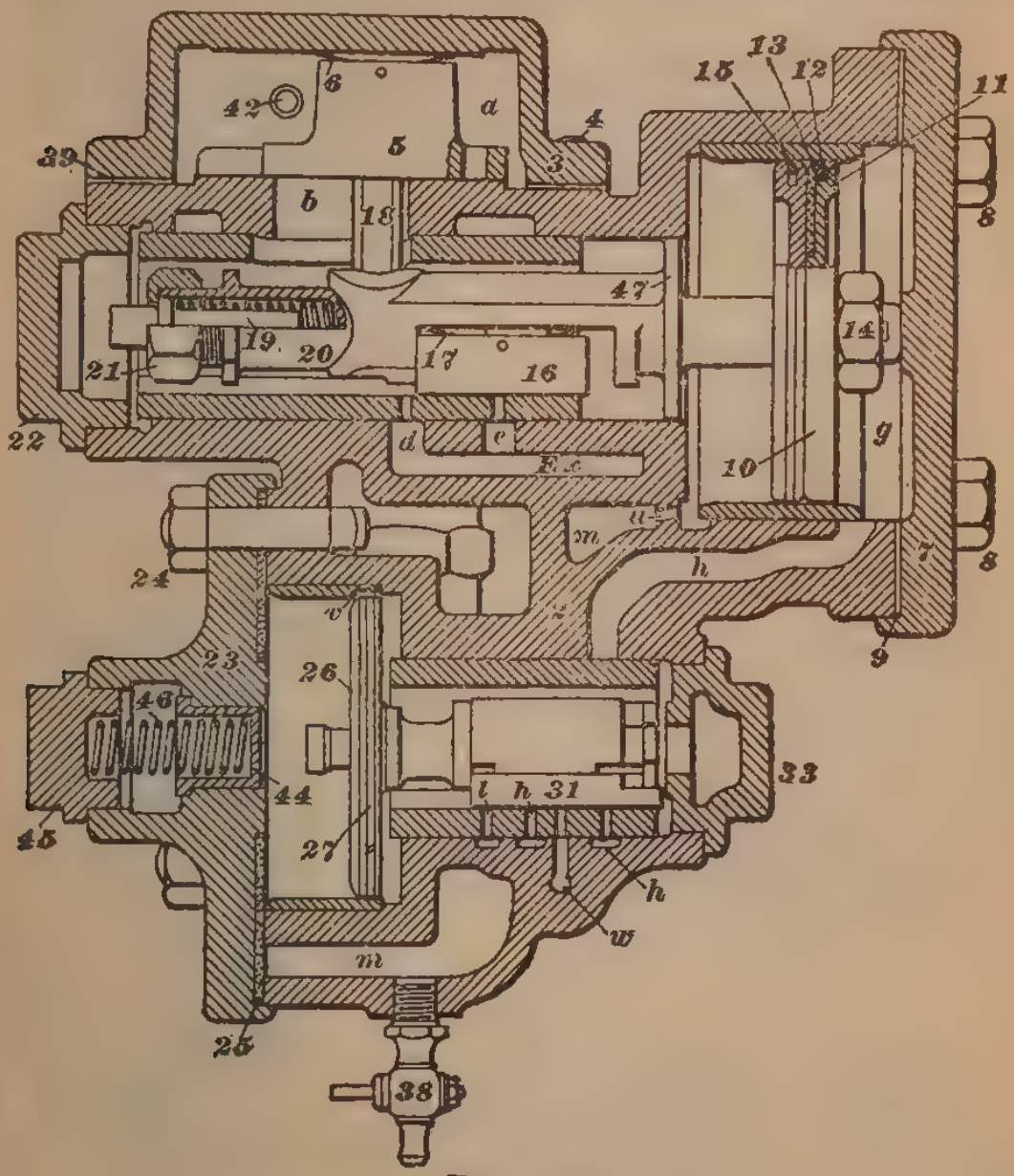

FIG. 3

the application cylinder and the application chamber. The volume of the equalizing-valve chamber in the distributing valve is included in the volume of the pressure chamber in all positions of the distributing valve.

In Fig. 3 is shown a view of the distributing valve with the valve body sectioned vertically; all the movable parts of the valve are shown in place.

Fig. 4 shows two views of the equalizing valve *31*; Fig. 5, a view of the valve seat; and Fig. 6, a view of the graduating valve. As shown in Fig. 4, port *z* extends through the equalizing valve, and *k*, *n*, and *q* are cavities in the face of the valve. Port *r* extends through the valve, and port *x* leads from port *r* into the cavity *q*. Port *s* extends through the valve into a groove in the valve face, which is in two widths. In the valve seat, Fig. 5, port *l* leads to the safety valve; the ports *h* combine and connect with the application cylinder and with the application-cylinder pipe connection *2*; port *i* leads to the distributing-valve release-pipe connection *4*; and port *w* leads direct to the application chamber.

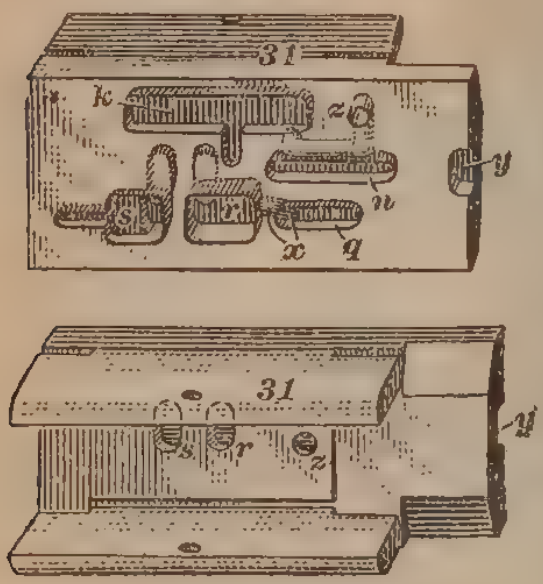

FIG. 4

In Fig. 7 are shown the exhaust-valve seat, with the exhaust ports *d* and *e* that lead to the brake-cylinder exhaust port of the distributing valve; the exhaust valve *16* and spring *17*, the side of the valve being broken away to show the port *f* that extends through the valve; the face of the application valve *5*, showing its port *a* and the opening into which the pin *18*

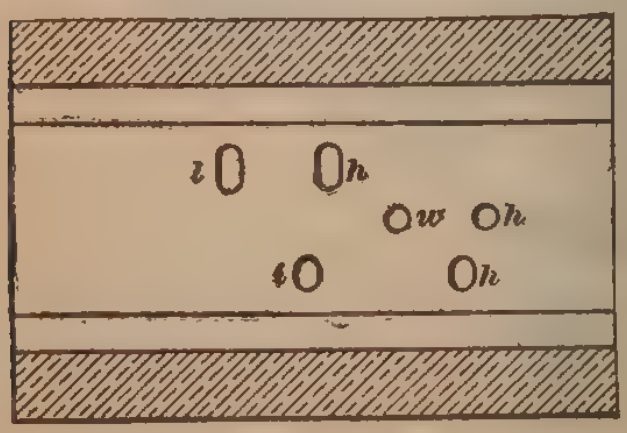

FIG. 5

FIG. 6

fits; and a view of the application-valve pin *18*. This pin is made of steel and fits snugly in the opening *18* in the application-piston stem. It extends upwards into the large round opening in the face of the application valve *5*, and its function is to transmit the motion of the application piston *10* to the application

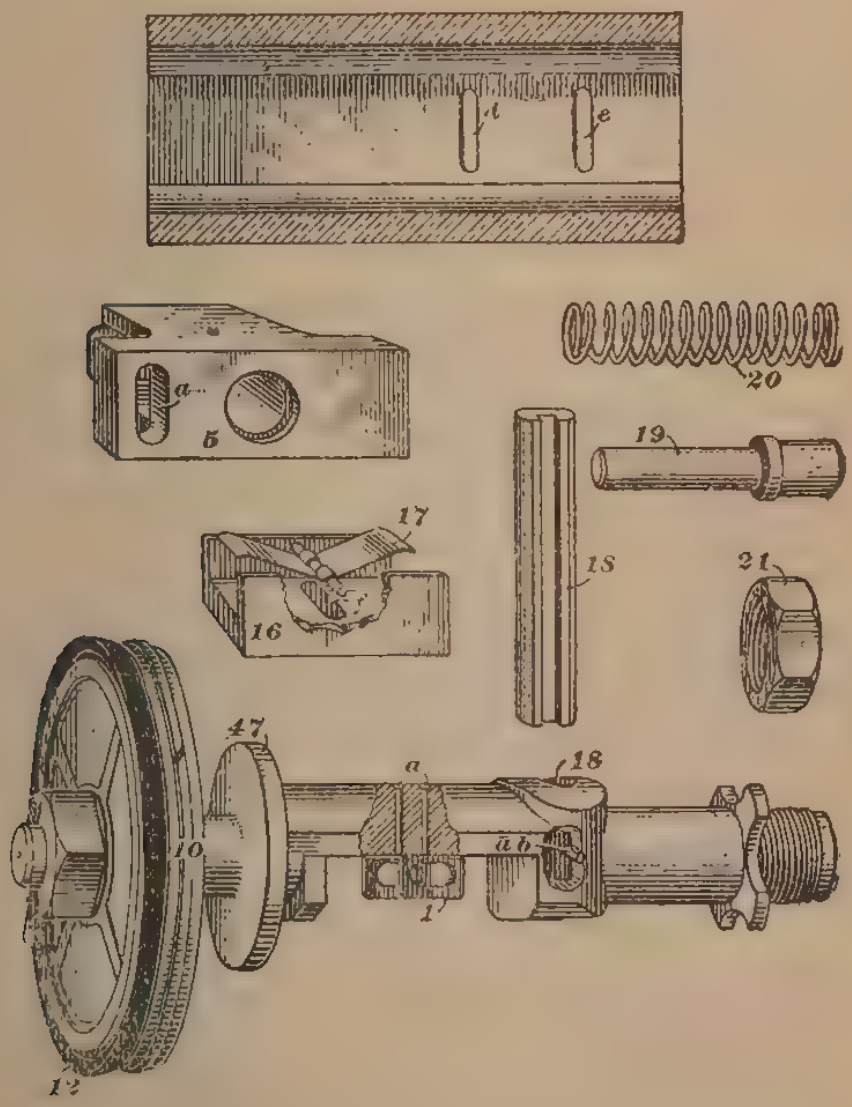

FIG. 7

valve *5*. It is grooved to receive the pin *ab* in the application piston and a similar pin in the opening in the application valve *5*, so that the application valve cannot be put in wrong end to. Also, a view of the application piston *10* is shown. This piston controls the movement of the application valve *5* and the exhaust valve *16*. It is moved back and forth by creating

a difference of pressure on its two faces. In this view the stem is broken away so as to show the rivets *a* that secure the exhaust-valve yoke *1* to the stem and the pin *ab* that fits in the groove in the application-valve pin *18*. The guide, or solid piston, *47* around the stem just back of piston *10* fills the cylinder between the application-piston cylinder and the exhaust-valve bushing, so that it is nearly air-tight. This acts as a dashpot to make piston *10* move back and forth gradually and thus steadies the movement of the valves *5* and *16*. The other figures show the application graduating stem *19* and spring *20*, and the application graduating-stem nut *21*.

DUTY OF PARTS

The duty of the equalizing piston *26* is to control the movement of the equalizing valve *31* and the graduating valve *28*, as well as to open and close the feed-groove *v*. It is caused to move by creating a difference of pressure on its two faces, the greater pressure moving it toward the lesser pressure. The equalizing valve *31* opens and closes communication between the pressure chamber, the application cylinder, and the application chamber, and between the application cylinder, the application chamber, and the distributing-valve exhaust. The equalizing valve is made shorter than the distance between the shoulders on the equalizing-piston stem, so that, when it is in service position, the piston can move the graduating valve far enough to open and close port *z* without moving the equalizing valve. The graduating valve *28* opens and closes port *z* in the equalizing valve *31*, and thus graduates the flow of air from the pressure chamber into the application cylinder when a graduated-service application is made with the automatic brake valve. The graduating valve also opens communication between the application cylinder and the safety valve through ports *r* and *s* in the equalizing valve when in service position, and closes this communication when in service-lap position.

The application piston *10* controls the movement of the application valve *5* and the exhaust valve *16*. It is caused to move by increasing or decreasing the pressure in the application

cylinder *g* above or below that in the exhaust-valve chamber. The application valve *5* controls or graduates the flow of main-reservoir air from chamber *a* to the exhaust-valve chamber and the locomotive brake cylinders when the brakes are being applied by either the automatic or independent brake valves. The exhaust valve *16* opens and closes the brake-cylinder exhaust ports *e* and *d*. It is made shorter than the distance between the shoulders on the application-piston stem, so that when the exhaust valve is in lap position, piston *10* can move valve *5* far enough to open and close port *b* without disturbing the exhaust valve. The application-piston guide *47* is made nearly an air-tight fit in its bushing, so that in addition to acting as a guide for piston *10*, it acts as a dashpot that assists in steadying the movement of the application piston and its slide valves *5* and *16*.

The application graduating stem *9* and spring *20* act as a cushion for piston *10* when it is moved to application position. They also assist the pressure in the exhaust-valve chamber in moving the application piston *10* back to lap position when the pressure in this chamber and that in the application cylinder are nearly equalized. The graduating stem *19* and its spring *20* are held in the stem of piston *10* by the nut *21*. The stem *19* touches the cap nut *22* just as the piston *10* starts from lap to application position; thus, as piston *10* moves to application position, the spring *20* is compressed, and when the pressure in the exhaust-valve chamber becomes a trifle greater than that in the application cylinder, spring *20* will assist in moving piston *10* back to lap position.

The equalizing-piston graduating sleeve *44* and spring *46* perform the same functions as the graduating stem and spring in a triple valve. They assist in preventing the equalizing piston from moving past service position during a service application on a short train, and also aid in starting the equalizing piston from emergency position.

The application piston *10* is provided with a packing leather *13* and a packing-leather expander *12*, as well as with a brass packing ring *15*. These prevent air from leaking from the application cylinder *g* into the exhaust-valve chamber during an application of the brakes.

The function of the application-valve pin *18* is to move the application valve *5* when piston *10* moves. The pin fits snugly in the stem of piston *10* and in valve *5*; thus, piston *10* cannot move without moving valve *5*. Whenever it becomes necessary to remove piston *10* from its cylinder, the application valve *5* and pin *18* must first be taken out.

The upper, or application, piston of the distributing valve controls the movement of the supply and exhaust valves that control the brake-cylinder air supply during an application of the locomotive brakes and exhaust brake-cylinder air to the atmosphere during a release of the brakes. The lower, or equalizing, piston controls the movement of the equalizing and graduating valves. The equalizing piston, equalizing valve, and graduating valve operate the same as the triple piston, slide valve, and graduating valve of a triple valve. They control the flow of air from the pressure chamber into the application cylinder and the application chamber during an automatic application of the brakes, and from the application cylinder and the application chamber to the distributing-valve exhaust when the brake is to be released by the automatic brake valve. The equalizing piston is operated by variations in brake-pipe pressure, and the application piston is operated by changes of pressure in the application cylinder or in the exhaust-valve chamber. With the ordinary automatic brake, the pressure in the brake cylinder depends on the amount of air the triple valve passes from the auxiliary reservoir into the brake cylinder; but with the ET equipment, the supply of air for the locomotive brake cylinders comes from the main reservoir, and the pressure in the brake cylinders is determined by the pressure in the application cylinder of the distributing valve. With an automatic application, the pressure in the application cylinder depends on how much air the equalizing piston and its slide valves pass from the pressure chamber into the application cylinder.

In another method of varying the pressure in the application cylinder to apply and release the locomotive brakes, no movement of the equalizing piston and its valves is required. This operation is performed by means of the independent brake valve. This brake valve can be operated to pass air

from the reducing-valve pipe direct into the application cylinder or to discharge air from the application cylinder to the atmosphere. This operates the application piston independently of the variation in brake-pipe pressure and applies or releases the locomotive brakes. Inasmuch as the supply of air for the brake cylinders is taken from the main reservoir direct and the operation of the application piston depends on the pressure in the application cylinder, as long as the pressure in the application cylinder is maintained, the same pressure will be maintained in the brake cylinders, regardless of brake-cylinder leakage or variations in brake-piston travel.

AUTOMATIC OPERATION OF DISTRIBUTING VALVE

A conventional view of the distributing valve and its double-chamber reservoir is shown in the accompanying illustration. As the parts, ports, and cavities in the distributing valve are located so that they cannot be shown in a true sectional view, this conventional view has been prepared to help in the study of the operation of the valve. It shows the pressure and application chambers of the double-chamber reservoir as a part of the distributing valve and of a different shape from the original, being smaller in proportion to the size of the valve, but with the same relative proportion to each other. However, it must be borne in mind that conventional views are given in order to simplify the tracing of the air through the various ports, as well as to help explain the operation of the valve, rather than to show its actual construction and the proper location of the various ports.

Automatic Charging Position.—When the distributing valve is charging, air from the main reservoir enters at *MR*, and passes into the application-valve chamber *a*. This supply of main-reservoir air is always present around the application valve *5*, unless the main-reservoir cut-out cock or the distributing-valve cut-out cock is closed.

When air is first admitted to the brake pipe, it enters the distributing valve at the brake-pipe connection and passes into chamber *p*. If the equalizing piston is not already in release position, the air entering chamber *p* will force it to release

position; then all parts will assume the positions shown. The feed-groove *v* is opened by the piston *26*, and air from chamber *p* will pass through it into the equalizing-valve chamber, thence through port *o* to the pressure chamber, until full brake-pipe

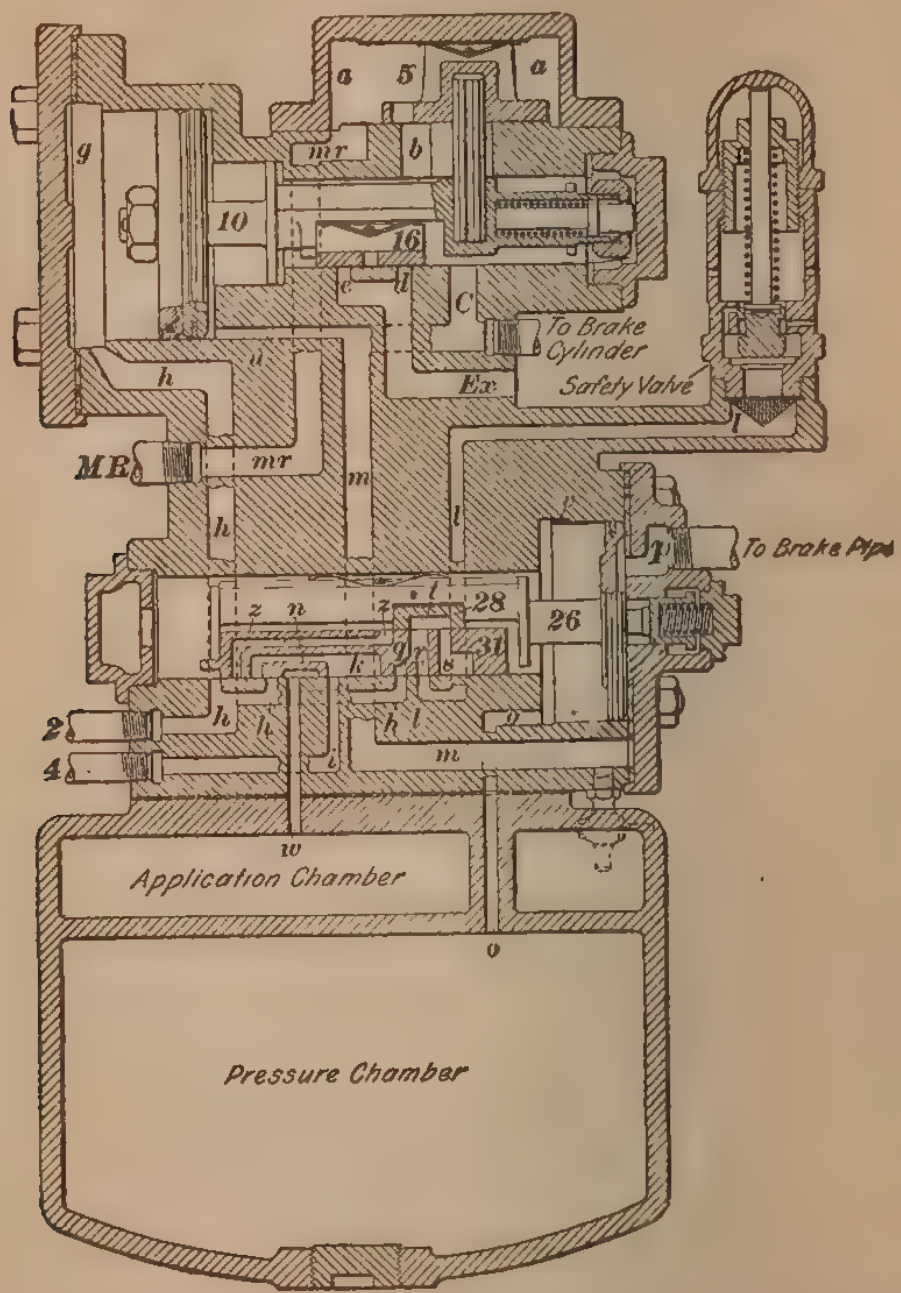

pressure is obtained in this chamber. The feed-groove *v* is made of such a size that it will charge the pressure chamber at the same rate as the feed-groove in a triple valve will charge its auxiliary reservoir.

Automatic Service Position.—When making an automatic service application of the brakes, brake-pipe pressure is reduced. This reduces the pressure in chamber *p* of the distributing valve, and as the feed-groove is very small, the pressure in chamber *p* can reduce faster than the air can pass back through the feed-groove *v*. The greater pressure in the equalizing-valve chamber will then move the equalizing piston *26* to the right. This movement cuts off communication between the equalizing-valve chamber and chamber *p*, by closing the feed-groove *v*. The graduating valve *28*, which fits snugly between the shoulders on the piston stem, is also moved on the back of the equalizing valve so as to uncover the upper end of port *z* in the equalizing valve, and cavity *t* in the graduating valve *28* connects the ports *r* and *s* in the top of the equalizing valve. By this time, the shoulder on the end of the piston stem has engaged the equalizing valve, and a further movement of piston *26* carries the equalizing valve with it and all these parts will assume service position. When the valves are in this position, cavity *k* in the face of the equalizing valve is moved from over ports *h* and *w*, so that these ports are no longer connected with the exhaust port *i*. Cavity *n* in the face of the equalizing valve connects ports *h* and *w* in the valve seat, thus opening communication between the application cylinder and the application chamber; also, port *r* is moved over port *h*, and port *s* over port *l*. As ports *r* and *s* are connected through cavity *t* in the graduating valve *28*, this opens communication between the application cylinder, the application chamber, and the safety valve. Port *z* in the equalizing valve registers with port *h* in the valve seat. This allows air from the equalizing-valve chamber and the pressure chamber to flow through ports *z* and *h* into passage *h*, thence to the application cylinder, and also through port *h*, cavity *n*, and port *w* into the application chamber. The equalizing piston stands against the graduating sleeve, but does not compress the graduating spring, because of its resistance and the fact that the slightly greater pressure in the equalizing-valve chamber is gradually reduced by the air passing through port *z*. If the pressure in the equalizing-valve chamber should be greatly in excess of the pressure in chamber *p*, the graduating spring

would be compressed and the parts would assume emergency position.

Air passing from the pressure chamber into the application cylinder builds up a pressure on the left side of the application piston *10*, which forces this piston to the right. This movement of piston *10* also moves the application valve *5* and exhaust valve *16* over to the right. The graduating stem *19* strikes the cap nut, and the graduating spring *20* is compressed. When the exhaust valve *16* moves to the right, it first closes the exhaust ports *e* and *d*, and thus cuts off the brake cylinders from the exhaust port *Ex* and the atmosphere. Application valve *5* then connects chamber *a* with port *b*, and thus allows main-reservoir air to flow from chamber *a* through port *b* into the exhaust-valve chamber, thence through port *c* to the brake cylinders.

If the reduction in the brake-pipe pressure is not great enough to equalize the pressures in the application cylinder, the application chamber, and the pressure chamber, air from the equalizing-valve chamber will continue to flow through ports *z* and *h* until the pressure on the pressure-chamber side of the equalizing piston *26* is a trifle less than that remaining in chamber *p* and the brake pipe. The greater pressure in chamber *p* will then move the equalizing piston *26* and graduating valve *28* to the left, until the graduating valve closes the upper end of port *z*, stopping the flow of air from the pressure chamber to the application chamber and the application cylinder, thus preventing any further increase in application-cylinder pressure. The graduating valve has also closed the top end of port *s* and cut off communication between the application cylinder and the safety valve, so that if the safety valve leaks, the leak cannot reduce the pressure in the application cylinder.

Air from chamber *a* will continue to flow to the exhaust-valve chamber and out through port *c* to the brake cylinders until the pressure in the exhaust-valve chamber slightly exceeds that in the application cylinder, when the greater pressure in the exhaust-valve chamber, assisted by the graduating spring *20* and stem *19*, will move piston *10* to the left far enough to close port *b* and stop the flow of air from chamber *a* to the exhaust-valve chamber. This position, is called ***automatic service lap position.***

Automatic Release Position.—To release the locomotive brakes through the automatic brake valve, both the H-6 and S-6 brake valves must be in running position. When the automatic brake valve is placed in release position, air from the main reservoir passing into the brake pipe increases the brake-pipe pressure, which causes the triple valves on the cars to move to release position and release the train brakes. At the same time, the increase of brake-pipe pressure also increases the pressure in chamber *p* of the distributing valve above that in the equalizing-valve chamber, which forces the equalizing piston *26* to the left, carrying with it to release position the equalizing valve *31* and the graduating valve *28*. When in this position, the equalizing piston *26* opens the feed-groove *v*, which allows air from chamber *p* to flow past piston *26* to the equalizing-valve chamber, and out through port and passage *o* into the pressure chamber, until the pressure equalizes on both sides of the equalizing piston *26*. The graduating valve *28* has the top end of port *z* blanked, and communication between ports *r* and *s* is cut off. Cavity *k* in the equalizing valve connects ports *h* and *w* with the exhaust port *i* that leads to the distributing-valve release pipe, but as the automatic brake valve is in release position, its rotary valve closes the opening from the release pipe to the atmosphere and prevents the distributing valve from releasing the locomotive brakes. In order to connect the distributing-valve release pipe with the atmosphere and thus release the locomotive brakes with the automatic brake valve, the automatic brake valve must be moved to running position. This allows the air from the application cylinder and chamber to escape to the atmosphere through ports *h* and *w*, cavity *k*, and port *i* into the distributing-valve release pipe, thence through the S-6 brake valve into the release pipe and out to the atmosphere through the automatic brake valve. As the air in the application cylinder reduces, the greater pressure in the exhaust-valve chamber moves piston *10* to the left, carrying with it the application valve *5* and the exhaust valve *16*. This movement of the application valve does not affect port *b*, but the exhaust valve *16* connects the brake cylinders with the atmosphere and brake-cylinder pressure exhausts through ports *d* and *e*, thus releasing the brake.

To graduate the release of the locomotive brakes, through the automatic brake valve, the handle should be left in running position just long enough to reduce the application-cylinder pressure the desired amount, after which it should be moved to lap, holding, or release position. As the pressure in the application cylinder *g* reduces, the greater pressure in the exhaust-valve chamber will move piston *10* and valves *5* and *16* to the left and the exhaust valve *16* will allow brake-cylinder air to escape through ports *d* and *e* until the pressure in the exhaust-valve chamber is slightly less than that remaining in the application cylinder, when the greater pressure in the application cylinder will move piston *10* and valve *16* to the right and stop the flow of brake-cylinder air to the atmosphere. The equalizing valve being in release position, the application chamber and the application cylinder are connected to the safety valve through ports *h*, *s*, and *l*.

Automatic Emergency Position.—When a sudden and heavy reduction in brake-pipe pressure is made, it causes the distributing valve to operate quick-action, and the movable parts will assume *automatic emergency position.* The pressure in chamber *p* of the distributing valve being suddenly reduced, the greater pressure in the equalizing-valve chamber quickly moves the equalizing piston *26* to the right with sufficient force to compress the graduating spring *46*, thus allowing the equalizing piston *26* to move its full stroke and rest against the gasket *25*. This movement carries the equalizing valve *31* with it to emergency position, port *h* in the equalizing-valve seat is uncovered, and air from the equalizing valve chamber passes through port *h* to passage *h* and the application cylinder. Cavity *n* in the equalizing valve is also moved away from port *h*, thus closing communication between the application cylinder and the application chamber. Under these conditions, the pressure chamber has only the small volume of the application cylinder to fill, consequently the pressure chamber and the application cylinder will equalize quicker and at a much higher pressure than during a service application. The operation of the application piston *10*, the application valve *5*, and the exhaust valve *16* in emergency applications is the same as in service applications, except that they are moved to application

position much quicker, and port *b* is opened wider than in service applications.

When the pressure in the exhaust-valve chamber becomes equal to that in the application cylinder, the application piston will be moved to automatic emergency lap position. When the pressure chamber is charged to 70 lb., an emergency application will equalize the pressures in the pressure chamber and the application cylinder at about 65 lb., but when the automatic brake valve is in emergency position, air from the main reservoir will pass through a small port in the rotary valve and a port in its seat, into the application-cylinder pipe, thence to the application cylinder of the distributing valve, which raises the pressure therein above 65 lb. The amount of pressure that will be allowed to accumulate in the application cylinder will be determined by the adjustment of the safety valve, to which it is connected. Main-reservoir air can pass through port *n* in the rotary valve of the automatic brake valve in about the same volume that it can pass to the safety valve through port *x* in the equalizing valve, so that a pressure of 68 lb. will be held in the application cylinder, as this is the pressure for which the safety valve is set. As the pressure in the brake cylinders is determined by the pressure in the application cylinder, also, 68 lb. will be obtained in them. This high brake-cylinder pressure will cause a shorter stop to be made than with a service application.

In high-speed brake service, the operation of the distributing valve is exactly the same as in ordinary service, but with the high-speed brake service, the brake pipe being charged to a pressure of 110 lb. and the main-reservoir pressure being about 130 lb., an emergency application will raise the pressure in the application cylinder, and consequently in the brake cylinders to about 93 lb. In this case, however, the small port *x* in the equalizing valve will allow air to pass from the application cylinder to the safety valve a little faster than it can enter the application cylinder through the small port in the automatic brake valve, so that the safety valve will reduce the pressure in the application cylinder from 93 to 75 lb. in about the same time as the high-speed reducing valve will reduce the brake-cylinder pressure to 60 lb.

When the application-cylinder pressure is reduced to 75 lb., a main-reservoir pressure of 130 lb. will force air into the application cylinder through the small port *n* in the rotary valve of the automatic brake valve as fast as it can escape from the application cylinder through the small port *x* in the equalizing valve, so that a pressure of 75 lb. will be maintained in the application cylinder and consequently in the locomotive-brake cylinders. When the equalizing piston *26* and valves *28* and *31* are in emergency position, and the application piston and valves *5* and *16* have moved to service position and then lapped the ports in the application-valve and exhaust-valve seats, the distributing valve is said to be in automatic emergency lap position.

If the emergency application is caused by a burst hose, by the opening of a conductor's valve, or by the train parting, the automatic brake valve must be lapped to save main-reservoir air. Under these conditions the distributing valve will operate in the same manner as previously explained, but, since the automatic brake valve is not in emergency position, no main-reservoir air will pass to the distributing valve through the application-cylinder pipe, therefore, the brake-cylinder pressure will not be as high as if the application were made by the automatic brake valve. In high-speed service carrying 110 lb. of brake-pipe pressure, the brake-cylinder pressure will be reduced to 68 lb., this being governed by the safety valve. If only 70 lb. of brake-pipe pressure is carried, the resulting brake-cylinder pressure will be but 50 lb. After a full-service application, if a greater brake-cylinder pressure is necessary, main-reservoir pressure may be conveyed to the application cylinder of the distributing valve by placing the automatic brake valve in emergency position.

Automatic Release After an Emergency Application.—The automatic brake valve is operated in the same manner to release the brakes after an emergency application as after a service application, but the effect on the distributing valve is somewhat different. When the H-6 brake valve is placed in release position, the brake-pipe pressure in chamber *p* of the distributing valve is increased above that in the equalizing-valve chamber and the equalizing piston and the valves *28* and

31 are moved to release position. Cavity *k* in the equalizing valve *31* connects port *h* with ports *w* and *i*, which allows the pressure in the application cylinder to expand into the application chamber, and the pressure will quickly equalize at 15 lb. This will cause the application piston *10* to reduce automatically the brake-cylinder pressure to the same amount, which will be retained as long as the automatic brake valve is in release position. To release the brake fully, the automatic brake valve must be placed in running position in order to connect the distributing-valve release pipe with the atmosphere.

INDEPENDENT OPERATION OF DISTRIBUTING VALVE

Independent Application Position.—When the distributing valve is operated by means of the independent brake valve, piston *10* and valves *5* and *16* are the only parts that move. The equalizing piston *26* and its valves *28* and *31* are not influenced by the operation of the independent brake valve. When the independent brake valve is moved to either slow-application or quick-application position, air from the main reservoir, reduced to a pressure of 45 lb. by the C-6 reducing valve, passes through the independent brake valve and application-cylinder pipe directly to the application cylinder of the distributing valve. This movement of the rotary valve of the independent brake valve also closes communication between the distributing-valve release pipe and the atmosphere, so that air from the application cylinder and chamber cannot escape through the distributing-valve exhaust port *i*. The pressure in the application cylinder forces the application piston *10* to the right to independent application position. The application valve *5* and the exhaust valve *16* will move with it, valve *16* will close the exhaust ports *d* and *e*, and valve *5* will then open port *a* to port *b*. Main-reservoir pressure from chamber *a* will pass through port *b* into the exhaust-valve chamber and out to the brake cylinders through port *c* until the pressure in the exhaust-valve chamber is a trifle more than that in the application cylinder, when the greater pressure in the exhaust-valve chamber assisted by the graduating spring *20* will force piston *10* to the left until valve *5* closes port *b*. This position of the distributing valve is called independent lap position.

A graduated independent application may be made by admitting a certain amount of pressure to chamber *g* in the distributing valve and then placing the independent brake valve in lap position, continuing this as often as desired until a full application is obtained. Each time the brake valve is lapped, the distributing valve will assume independent lap position. When a full independent application is obtained, there will be a pressure of 45 lb. in the application cylinder and the locomotive brake cylinders, this being the pressure for which the C-6 reducing valve is set. When the equalizing valve *31* and piston *26* are in release position, if the reducing valve is out of order or improperly adjusted, the safety valve will prevent the application-cylinder pressure rising above 68 lb., the pressure for which it is set, provided the independent brake valve is in slow-application position; but if the independent brake valve is in quick-application position, the larger ports in the brake valve will supply air to the application cylinder faster than it can escape through the safety valve; consequently, the brake-cylinder pressure will be increased above the amount for which the safety valve is set.

Independent Release Position.—If the equalizing piston *26* is in release position when the locomotive brakes are being released by means of the independent brake valve, the movable parts of the distributing valve will assume independent release position, which is exactly the same as when the brakes are released by the automatic brake valve. When the independent brake valve is moved to release position, it allows air to flow from the application chamber and cylinder to the atmosphere. The greater pressure in the exhaust-valve chamber then moves piston *10* to the left, carrying valves *5* and *16* with it. Valve *16* opens port *d*, and port *f*, through valve *16*, registers with port *e*. This allows air from the exhaust-valve chamber and brake cylinders to escape to the atmosphere through the exhaust port *Ex*.

When the equalizing piston of the distributing valve is in release position and the automatic brake valve is in running position, the locomotive brakes can be released by placing the independent brake valve in running position. Under these circumstances, application-cylinder and application-chamber air

will flow through ports *h* and *w*, cavity *k*, and port *i* into the distributing-valve release pipe, and then through the independent brake valve into the release pipe and out to the atmosphere through the automatic brake valve.

The locomotive brakes may be released by the independent brake valve after they have been applied in service or emergency by the automatic brake valve by moving the independent brake valve to release position. This allows the air in the application cylinder to escape through the application-cylinder pipe and the independent brake valve. However, if the automatic brake valve is in emergency position when releasing the locomotive brakes through the independent brake valve, it will be necessary to hold the independent brake valve in release position in order to prevent the brakes from reapplying, because, with the automatic brake valve in emergency position, main-reservoir air will be supplied to the application cylinder through the maintaining port *n* in the rotary valve of the automatic brake valve.

To graduate the release of the locomotive brakes through the independent brake valve, the handle of this valve should be moved to full-release position (or to running position, if the automatic brake valve also is in running position) long enough to reduce the pressure in the application cylinder the desired amount, and then moved to lap position. As the pressure in the application cylinder and chamber is reduced, the greater pressure in the exhaust-valve chamber will move the application piston *10* and exhaust valve *16* to the left and reduce the brake-cylinder pressure a trifle below the application-cylinder pressure, when the application piston *10* and the exhaust valve *16* will move to the right and close ports *d* and *e* and retain the remaining pressure in the locomotive-brake cylinders.

PRESSURE-MAINTAINING FEATURE OF DISTRIBUTING VALVE

The pressure-maintaining feature of the distributing valve is very valuable in connection with the ET equipment, for as long as there is air pressure in the application cylinder of the distributing valve, the same amount of pressure will be

maintained in the locomotive-brake cylinders, regardless of the length of piston travel or the ordinary brake-cylinder leakage. This is due to the fact that the supply of air for the locomotive-brake cylinders is taken from the main reservoir, and when the application piston *10* is in service lap position, due to either an automatic or an independent application, a leak that reduces brake-cylinder pressure will also reduce the pressure in the exhaust-valve chamber of the distributing valve, which will cause the application piston *10* and valve *5* to be moved to the right by the greater pressure in the application cylinder. As the application valve *5* is moved to the right, it will open communication between chamber *a* and the brake cylinders through port *b* in the application-valve seat and allow main-reservoir air to pass to the locomotive-brake cylinders until the pressure in the exhaust-valve chamber, and consequently in the brake cylinders, is equal to that in the application cylinder, when the application piston *10* will move valve *5* to the left far enough to close port *b*. This action of the distributing valve will be repeated each time the leaks reduce brake-cylinder pressure below that in the application cylinder. It is possible for the leaks from the brake cylinder to cause the application piston *10* and valve *5* to be moved to the right just far enough to supply main-reservoir air to the brake cylinders through port *b* as fast as it can escape through the leaks, in which case piston *10* would not move valve *5* back to lap position until the brakes were released through the brake valves.

If there are any leaks from the application cylinder of the distributing valve, this maintaining feature will be destroyed, because, with the brakes applied and the brake valve in lap position, the leak will continue to reduce the pressure in the application cylinder. This will allow the greater pressure in the exhaust-valve chamber to move the application piston *10* and its valves to release position and exhaust brake-cylinder air. In such a case, however, it will be possible to hold on the brakes by placing the independent brake valve in slow-application position.

Automatic Emergency Position With Quick-Action Cylinder Cap.—The valves in the quick-action cylinder cap do not operate during a service application, but when an automatic

emergency application is made, they operate to vent some of the brake-pipe air to the locomotive-brake cylinders. The brake-pipe air vented to the locomotive brake cylinders by the quick-action cylinder cap does not give any higher brake-cylinder

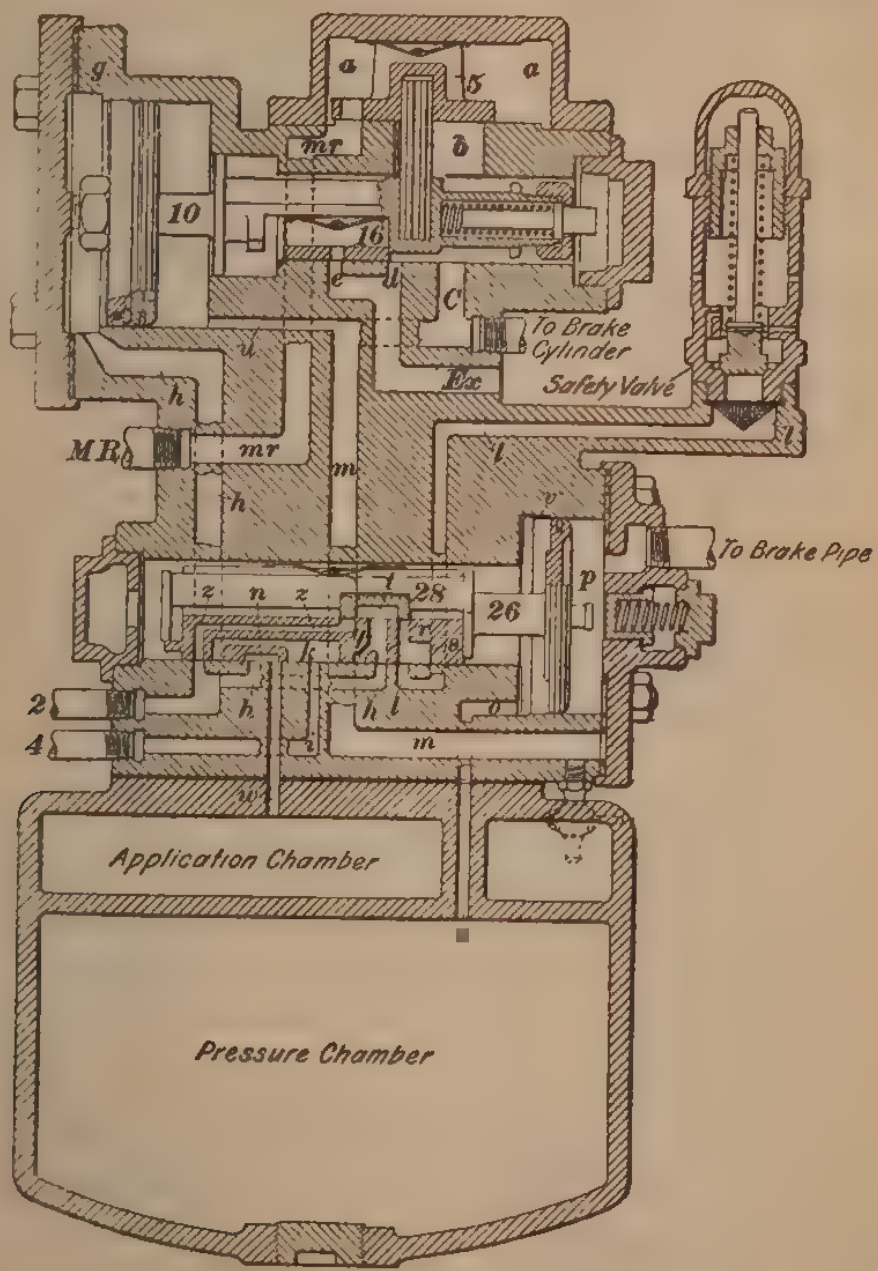

pressure, but causes a local reduction in brake-pipe pressure that insures the quick-action operation of the train brakes. The positions of the various parts, when the valve is in automatic emergency position, are as here shown

When a heavy and sudden brake-pipe reduction is made, piston *26* moves out quickly the full length of its cylinder. The knob on the piston strikes the valve stem *50* and moves it over against the tension of the spring *55*. As the emergency valve *48* fits snugly between the shoulders on the valve stem *50*, it also moves to the right and uncovers port *j* in the valve seat. This allows brake-pipe air from chamber *P* to pass through port *j* to chamber *X*, which forces the check-valve *53* down against the resistance of spring *54*. This allows brake-pipe air to flow to passage *m* in a large volume; it then passes through passage *u* to the chamber back of the application piston *10*, and through port *c* into the brake cylinders. This makes a local reduction in brake-pipe pressure, which insures that the next distributing valve, or quick-action triple valve, will go into quick action.

When the brake-cylinder and brake-pipe pressures have nearly equalized, spring *54* forces valve *53* back to its seat, so that no air can pass from the locomotive-brake cylinders into the brake pipe. When the brake-pipe pressure is increased sufficiently to force piston *26* back to release position, the graduating spring *55* forces the stem *50* and emergency valve *48* back to their normal positions. During this movement, valve *48* closes port *j*.

CARE OF DISTRIBUTING VALVE

In order that the distributing valve may work properly, the valves and pistons must be kept well lubricated and free from dirt. The distributing valve and its reservoir should be regularly drained and the pipe connections should be kept tight. If the distributing valve is to be repaired or cleaned and tested, it should be removed from the double-chamber reservoir; this is done by removing the nuts from the reservoir studs. As all the pipe connections are made to the double-chamber reservoir, removing the valve in this manner will not interfere with the pipe joints. If the gasket between the distributing valve and the reservoir becomes torn or injured while removing the valve, a new one must be supplied, as a very slight leak across this gasket, from one port to another, will interfere seriously with the operation of the valve. When the pipes are

first installed or when new ones are applied, they should be blown out with steam or compressed air before the valves are attached, to clear them of foreign matter.

If the distributing valve becomes dry from lack of lubrication, or if it becomes corroded or very dirty, a greater difference of pressure will be required to overcome the excessive friction and to operate the movable parts.

If the pipes and passages become corroded or very dirty, the engine brakes will not apply and release as promptly as when they are clean. If the engine brakes fail to apply when the brake system is fully charged and a 5-lb. service reduction is made, the trouble is most likely due to excessive friction in the working parts of the distributing valve, which should then be removed, cleaned, and lubricated. Sometimes the equalizing-piston packing ring sticks in its groove and prevents the equalizing piston from being moved by variations in brake-pipe pressure.

PC PASSENGER-BRAKE EQUIPMENT

DEVELOPMENT OF EQUIPMENT

The schedule PC equipment was designed especially for passenger-train service to control passenger cars weighing 130,000 lb. or more. Passenger-brake cylinders had been increased from time to time as the increased weight of the cars demanded, until the 18-in. cylinder finally came into use. This brake cylinder provided for cars of maximum weight up to 127,000 lb. When cars of 150,000 lb. or more were under construction, it became necessary either to use a 20-in. brake cylinder or to redesign the brake rigging so as to provide for a suitable brake for this service. A very serious objection to the use of a 20-in. cylinder was the time necessary to apply the brake to its full capacity. At 80 mi. per hr., the speed is 116 ft. per sec.; and at 60 mi. per hr. it is 88 ft. per sec. A couple of seconds lost, therefore, means a couple of hundred feet passed over before the brake begins to be effective, thus greatly lengthening the

distance in which a stop could be made. Another objection to the use of a 20-in. cylinder is that on account of leakage the stop will be lengthened still more, it being impossible to obtain packing leathers large enough and of sufficient uniformity to prevent excessive leakage. Then, too, the piston rods, levers, etc. will be so large and heavy that they will take up too great a percentage of the power developed. The increased weight of the cars naturally brought increased length of trains, and the larger cylinders and greater train length mean that a much greater volume of air must be handled through the brake pipe. This would make the action of the brake on a train of cars with 20-in. cylinders so slow that it would be impossible to control the heavy cars with nearly the same effectiveness as is obtained with the brake used on lighter cars.

Train Energy to Be Controlled.—The accompanying table has been compiled in order to give a clear idea of the tremendous amount of energy that the brake of a modern heavy passenger

ENERGY OF TRAIN AT DIFFERENT SPEEDS

Speed Miles per Hour	Velocity Head Feet	Energy per 1,000 Lb. of Weight Foot-Pounds	Total Energy of Train Weighing 1,650,000 Lb. Foot-Pounds
10	3.55	3,550	5,857,500
20	14.20	14,200	23,430,000
30	31.95	31,950	52,717,500
40	56.80	56,800	93,720,000
50	88.75	88,750	146,437,500
60	127.80	127,800	210,870,000
70	173.95	173,950	287,017,500

train has to destroy in stopping the train. The velocity head multiplied by the weight of the train, in pounds, will give the energy, in foot-pounds, for that speed. The third column of the table gives the energy of each 1,000 lb. of train at the different speeds given in the first column. The rate of change of the energy of 1,000 lb. of train with the increase in speed is indicated

by the curve in the accompanying chart, which was plotted from the values given in the third column of the table. Both the table and the curve show that the energy of each 1,000 lb. of train is four times as great at 20 mi. per hr. as at 10 mi. per hr.; nine times as great at 30 mi. as at 10 mi.; sixteen times as great at 40 mi.; twenty-five times as great at 50 mi.; thirty-six times as great at 60 mi.; and forty-nine times as great at 70 mi. In

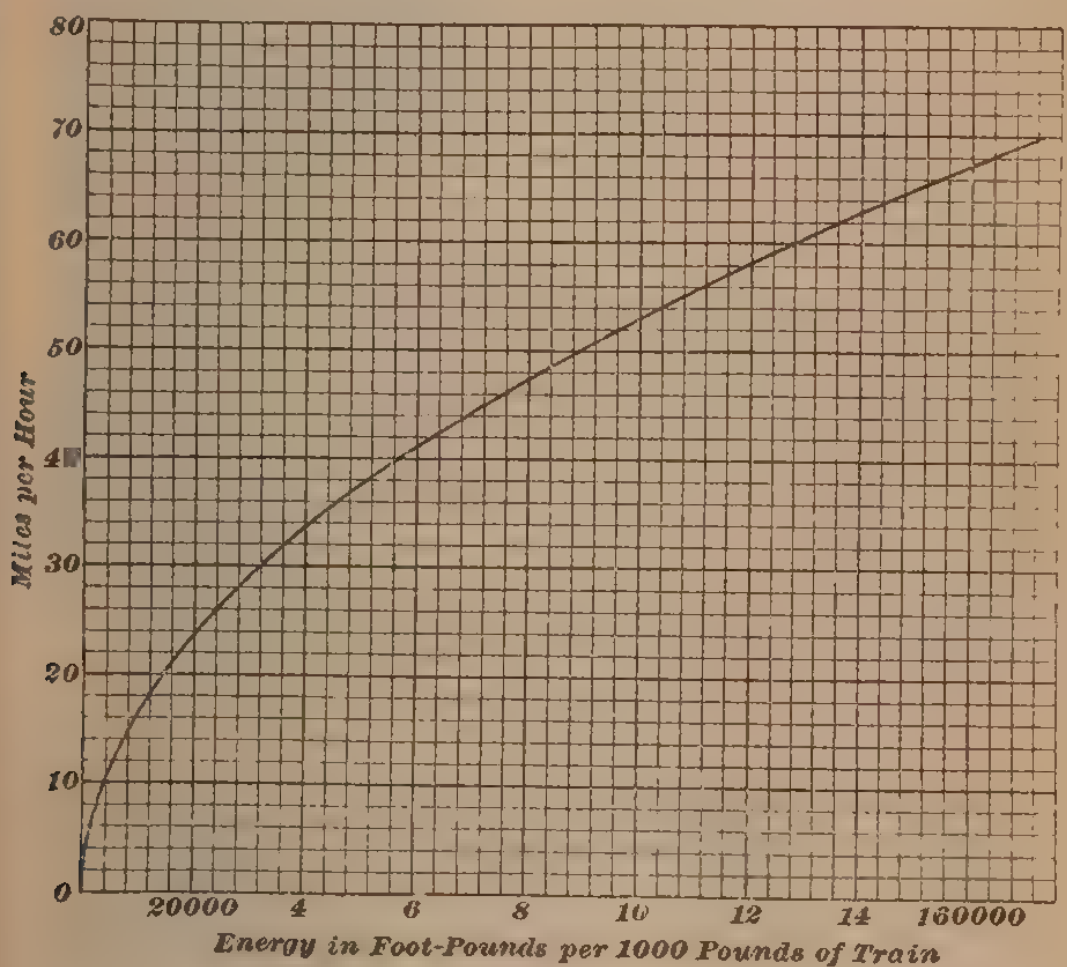

other words, at 70 mi. per hr., the brake has to do forty-nine times as much work to stop the train as it would at 10 mi. per hr.

Suppose that a train weighs 1,650,000 lb. Then, according to the fourth column of the table, the brake must destroy 5,857,500 ft.-lb. of energy in stopping the train at 10 mi. per hr.; whereas, at 70 mi. per hr., it must destroy 287,017,500 ft.-lb. of energy, an amount sufficient to raise the entire train 174 ft.

vertically in the air. The magnitude of the energy that must be destroyed in stopping the train running at a speed of 70 mi. per hr. is too great to grasp without a special effort. But to give an idea of the magnitude, it may be said that if a person were to count 150 in each minute, or 90,000 in 10 hr., he would have to count 10 hr. a day at this rate for about 3,189 da., or every day for about 8¾ yr., to count the number of foot-pounds of energy to be destroyed in stopping the train running at a speed of 70 mi. per hr., or 287,017,500. This energy, if converted into heat, would produce 268,917 units of heat, an amount sufficient to raise 2,598 lb. (311 gal.) of water from 70° F. to the boiling point, or to raise the temperature of 16 T. of iron 100° F.

To destroy, within a distance of less than 1,200 ft. and without endangering the safety of the passengers and equipment, the enormous energy stored up in modern trains of heavy cars moving at high speeds, requires a brake of high maximum emergency stopping power; to perform the ordinary service functions and to provide the automatic safety and protective features necessary for a service of this kind, requires a very flexible and efficient service stopping power. It was to provide a brake that would fulfil these requirements that the PC passenger equipment was designed and introduced into service.

FUNCTIONS AND FEATURES OF BRAKE

In the PC passenger equipment, the triple valve is replaced by a valve known as a *control valve*, which performs several new functions in the manipulation of the brakes. The features of the brake, as well as its functions, are as follows:

Graduated release and quick recharge, which are obtained in a manner similar to that of the type L triple valve. The emergency reservoir furnishes the air necessary for obtaining the graduated release and for assisting in recharging.

Certainty and uniformity of service action, which are obtained by so designing the parts of the control valve that the feed-grooves are closed on the slightest brake-pipe reduction. The design is such that the differential necessary to move the parts

to service position is then built up as the brake-pipe reduction progresses.

Quick rise in brake-cylinder pressure, which is provided for by prompt movement of the parts of the control valve and by direct, unrestricted passages from the reservoirs to the brake cylinders during applications.

Uniformity and maintenance of brake-cylinder pressure during service stops, which are provided for as in the distributing valve of the ET equipment.

Predetermined limiting of the service braking power, which is freed by the equalization of the pressures in the application chamber and the pressure chamber of the control valve. This feature does away with the necessity of the safety-valve feature of the ET and other equipments.

Automatic emergency application on depletion of brake-pipe pressure, which is insured automatically by the movement of the parts of the control valve to emergency position just as soon as the brake-pipe reduction becomes less than the pressure at which the pressure chamber and the reduction-limiting chamber equalize.

Full emergency braking power at any time; the operation of the emergency and quick-action parts of the control valve is such as to give the full emergency braking power whenever the parts move to emergency position. The parts can be moved to emergency position at any time by making an emergency application either with the brake valve or the conductor's valve, or by other means; hence, full emergency braking power can be obtained at any time, even after a full service application has been made.

Separate service and emergency features, thus giving the necessary flexibility for service applications without interfering in the slightest with the emergency features of the equipment.

A low total leverage ratio and greater brake efficiency, due to the use of two brake cylinders on each car; also, this arrangement gives a higher service equalization pressure.

Less tendency to undesired light applications of the brake because the apparatus is less sensitive than others to the light fluctuations of brake-pipe pressure; this insures against brakes creeping on and dragging.

Maximum possible rate of rise of brake-pipe pressure, thus insuring greater certainty of all brakes releasing when a release is made. This is due to the fact that the brake pipe alone has to be charged by the air that flows through the brake valve; the pressure in the pressure chamber of the control valve is restored by air from the emergency reservoir, which raises the pressure at the same rate as brake-pipe pressure up to the point of equalization (about 5 lb. less than normal brake-pipe pressure) of the emergency reservoir and the pressure chamber. After equalization, the reservoir and the pressure chamber are charged up to normal pressure from the brake pipe; this insures a rapid and certain release of all brakes and a rapid recharge and prompt response to succeeding reductions that may be made.

Greatly increased sensitiveness to release, due to the fact that the rate of rise of brake-pipe pressure is much greater, because only enough air to charge the brake pipe must flow from the main reservoir through the brake valve to release the brake.

Means of eliminating the graduated release feature during the transition period; if a PC equipment is used in a train of cars not so equipped, the graduated-release feature can be quickly and easily cut out.

GENERAL ARRANGEMENT OF BRAKE

Piping diagrams showing two methods of arrangement of the PC equipment are shown in Figs. 1 and 2. Fig. 1 shows the arrangement when the two brake cylinders point in opposite directions, whereas Fig. 2 shows the arrangement when the cylinders point in the same direction. The arrangement shown in Fig. 1 permits of a simpler arrangement of the hand-brake rigging; on the other hand, the arrangement shown in Fig. 2 brings, on some cars, the slack adjusters into a more convenient position. The choice of arrangements, therefore, depends largely on the construction of the underframing of the car and on the location of the apparatus under the car.

Two brake cylinders are used on each car. The *service cylinder* is used in both service and emergency applications;

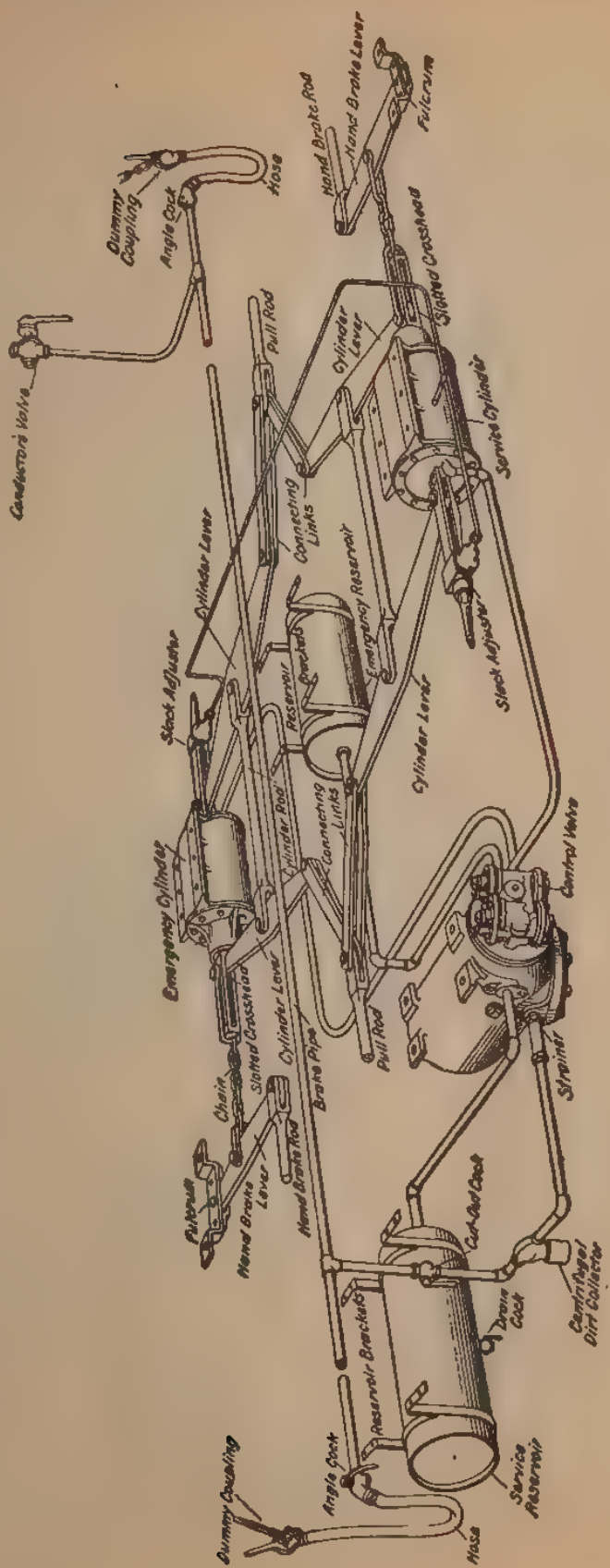
Conductor's Valve
Dummy Coupling
Angle Cock
Hose
Hand Brake Rod
Hand Brake Lever
Fulcrum
Pull Rod
Cylinder Lever
Slotted Crosshead
Service Cylinder
Connecting Links
Emergency Reservoir
Brackets
Reservoir
Stock Adjuster
Cylinder Lever
Stock Adjuster
Cylinder Lever
Emergency Cylinder
Cylinder Rod
Connecting Links
Control Valve
Slotted Crosshead
Cylinder Lever
Brake Pipe
Pull Rod
Strainer
Chain
Fulcrum
Hand Brake Lever
Hand Brake Rod
Car Axle Cock
Drain Cock
Centrifugal Dirt Collector
Reservoir Brackets
Angle Cock
Dummy Coupling
Hose
Service Reservoir

FIG. 1

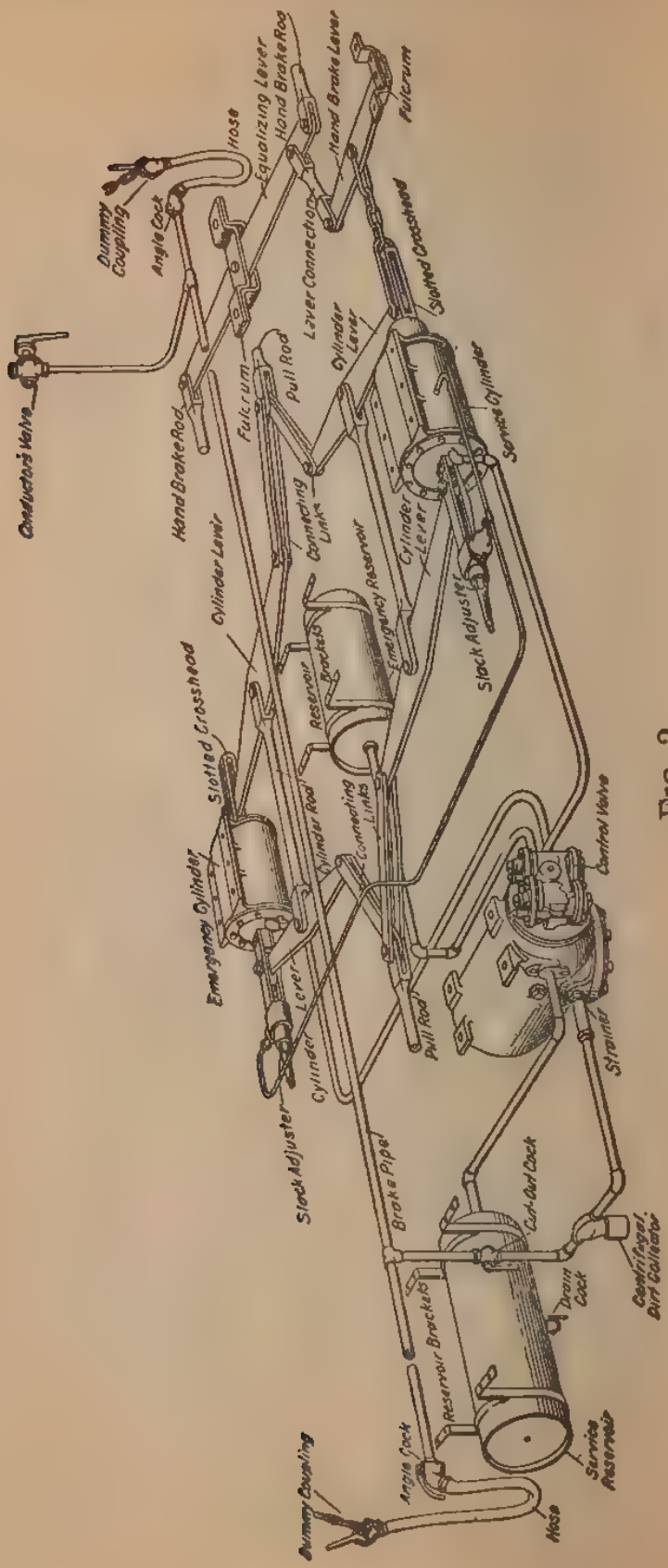
Conductor's Valve
Dummy Coupling
Angle Cock
Hose
Equalizing Lever
Hand Brake Rod
Hand Brake Lever
Fulcrum
Lever Connection
Slotted Crosshead
Cylinder Lever
Pull Rod
Fulcrum
Hand Brake Rod
Service Cylinder
Connecting Links
Cylinder Lever
Emergency Reservoir
Cylinder Levers
Brackets
Reservoir
Stock Adjuster
Slotted Crosshead
Cylinder Rod
Connecting Links
Emergency Cylinder
Control Valve
Cylinder Lever
Pull Rod
Strainer
Stock Adjuster
Brake Pipe
Cut-Out Cock
Centrifugal Dirt Collector
Drain Cock
Reservoir Brackets
Angle Cock
Service Reservoir
Dummy Coupling
Hose

FIG. 2

the *emergency cylinder* operates during an emergency application, but does not operate during a service application. Thus, in emergency applications, the maximum service braking power is doubled not by increased brake-cylinder pressure, as in the other equipments, but by the use of the second cylinder. Each cylinder is provided with a slack adjuster, and both adjusters are connected to the slack-adjuster hole in the service-brake cylinder; thus, they will operate simultaneously and take up the slack evenly in the two brake cylinders and in accordance with the requirements of the service cylinder.

Two reservoirs are used with this equipment. The *service reservoir* supplies air to the service-brake cylinder; the *emergency reservoir* supplies air to the emergency cylinder during emergency applications; also, in service operations, it furnishes the air used in obtaining graduated release and quick recharge of the equipment. A third reservoir, forming part of the control valve, has three chambers called the pressure chamber, the application chamber, and the reduction-limiting chamber.

NO. 3-E PASSENGER CONTROL VALVE

The No. 3-E passenger control valve, superseding the No. 3-D control valve, is standard for and regularly furnished with PC (two-cylinder) schedules for very heavy passenger cars; i. e., PC-2-12, PC-2-14, PC-2-16, and PC-2-18. In Fig. 1 (*a*) is shown the release portion of this valve and in (*b*), the application portion; the equalizing portion is shown in Fig. 2 and the emergency and quick-action portion in Fig. 3. The piece number of the control valve, complete, is 37,896. The piece and reference numbers of the various parts are given in the accompanying list.

Pc. No.	*Ref. No.*	*Name of Part*
37,873		Equalizing portion, complete.
32,143		Application portion, complete.
36,435		Emergency portion, complete.
35,598		Quick-action portion, complete.
37,849	2	Equalizing body, complete, includes one each of 19 and 37.
36,420	3	Release piston, complete, includes one of 9.
37,042	4	Release-slide valve.

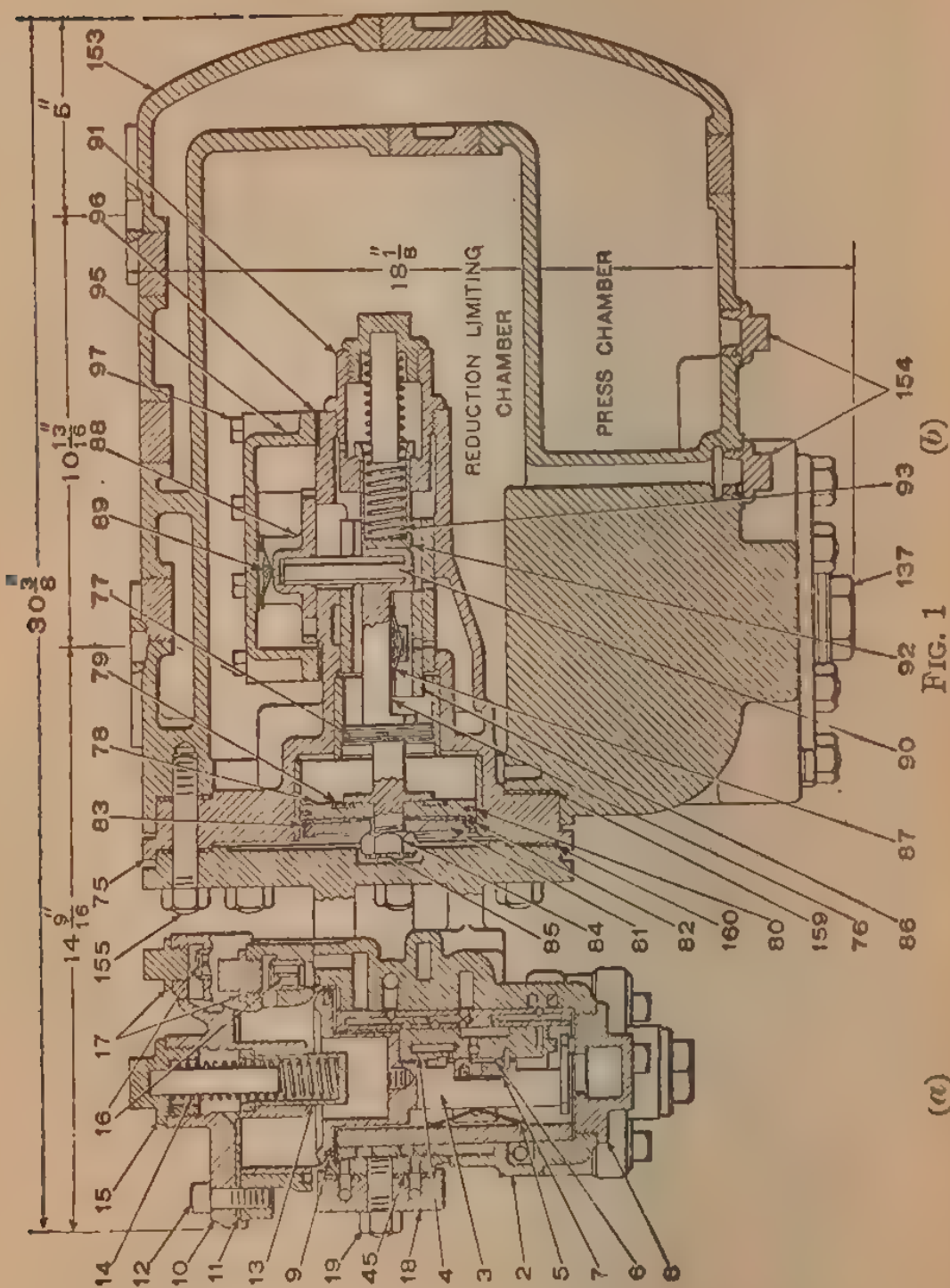
REDUCTION LIMITING CHAMBER
PRESS CHAMBER
30 3/8"
10 13/16"
14 9/16"
5"
18 1/8"
(a)
(b)

FIG. 1

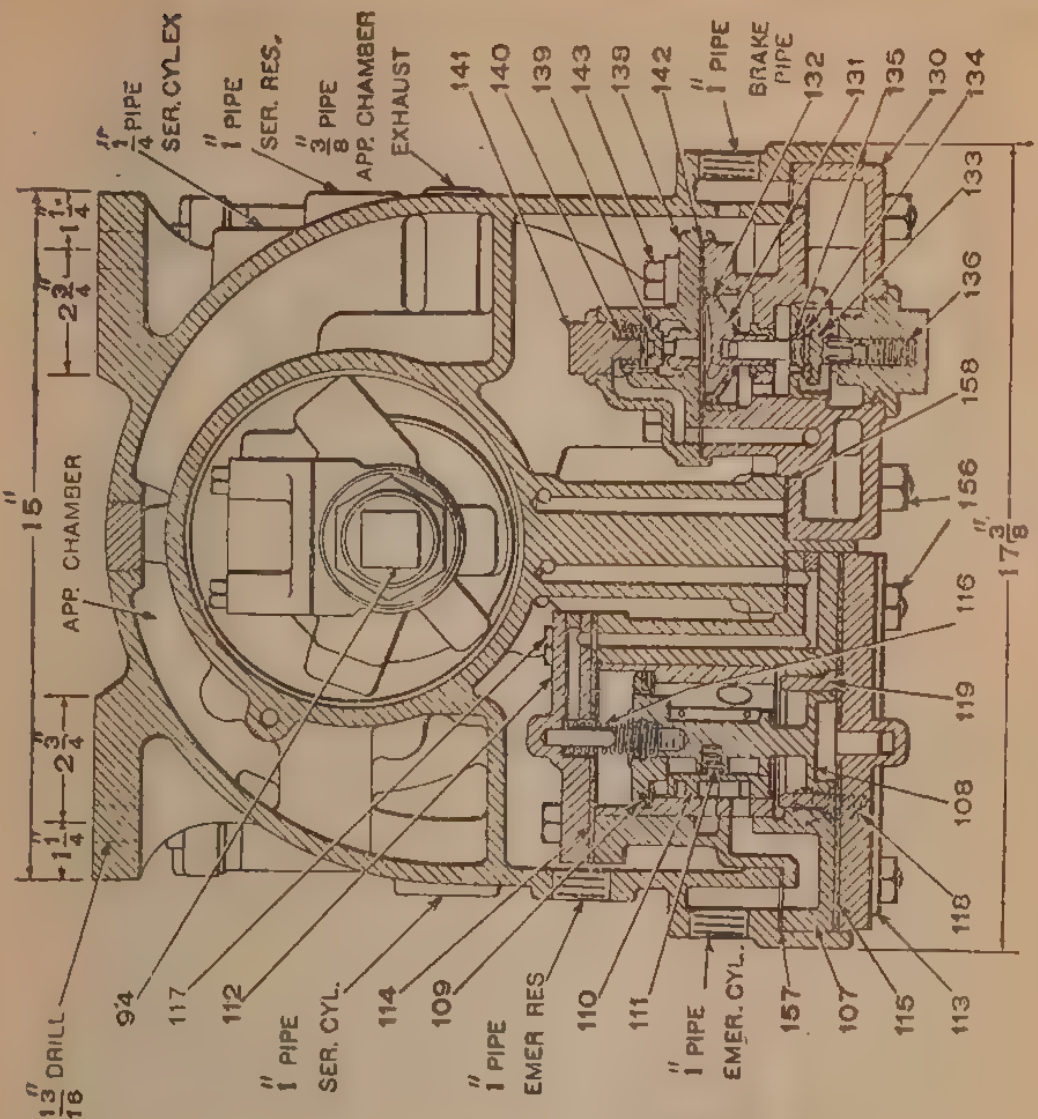
1/4" PIPE SER. CYLEX
1" PIPE SER. RES.
3/8" PIPE APP. CHAMBER
EXHAUST
1" PIPE BRAKE PIPE
APP. CHAMBER
15"
1 1/4"
2 3/4"
2 3/4"
1 1/4"
13/16" DRILL
1" PIPE SER. CYL.
1" PIPE EMER RES
1" PIPE EMER. CYL.
17 3/8"
94
117
112
114
109
110
111
157
107
115
113
118
108
119
116
156
158
136
133
134
130
135
131
132
142
138
139
143
140
141

FIG. 3

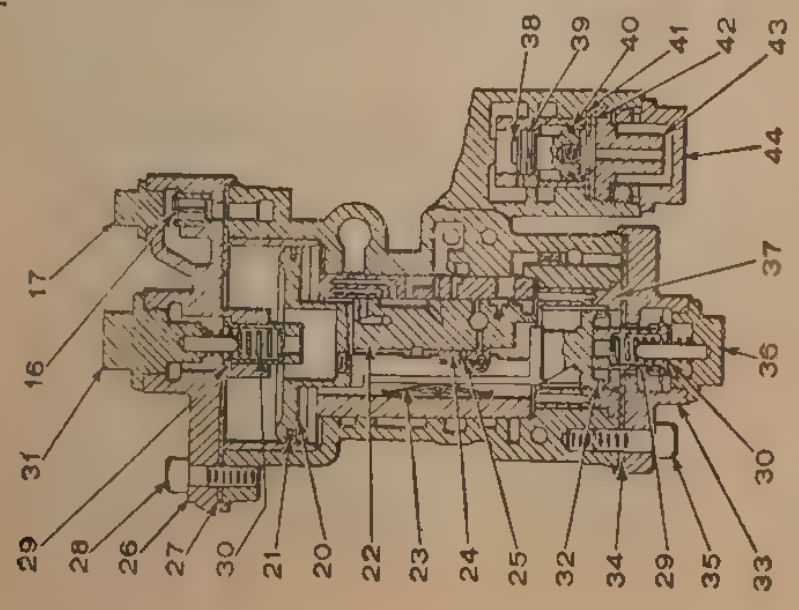
17
16
31
29
28
26
27
30
21
20
22
23
24
25
32
34
29
35
33
30
36
37
44
43
42
41
40
39
38

FIG. 2

Pc. No.	Ref. No.	Name of Part
9,326	5	Release side-valve spring.
37,040	6	Release graduating valve.
31,530	7	Release graduating-valve spring.
36,421	8	Release-piston cap nut, for equalizing portion.
28,928	9	Release-piston ring.
36,381	10	Release-cylinder cap, bushed and plugged.
36,410	11	Release-cylinder-cap gasket.
25,418	12	Square head capscrew, ½ in.×1½ in.
36,384	13	Release-piston graduating sleeve.
36,406	14	Release-piston graduating spring.
36,387	15	Release-piston graduating nut.
36,023	16	Check-valve.
36,401	17	Check-valve cap nut.
55,353	18	Release regulating cap.
4,887	19	Stud and nut for release regulating cap.
36,823	20	Equalizing piston, complete, includes one each of 21 and 32.
28,928	21	Equalizing-piston ring, large.
37,870	22	Equalizing slide valve.
9,326	23	Equalizing slide-valve spring.
36,374	24	Equalizing graduating valve.
35,987	25	Equalizing graduating-valve spring.
36,383	26	Large equalizing-cylinder cap, bushed and plugged.
36,411	27	Large equalizing-cylinder-cap gasket.
25,418	28	Square head capscrew, ½-in.×1½-in.
36,824	29	Equalizing-piston stop sleeve.
1,523	30	Equalizing-piston stop spring.
36,830	31	Equalizing-graduating nut.
20,493	32	Equalizing-piston ring, small.
36,405	33	Small equalizing-cylinder cap.
36,391	34	Gasket for small equalizing-cylinder cap.
25,418	35	Square head capscrew, ½-in.×1½-in.
36,826	36	Cap nut for small equalizing-cylinder cap.
37,127	37	Small equalizing-piston bush.
36,044	38	Service-reservoir charging valve, complete, includes 39 and 40.
32,227	39	1-in. charging-valve piston ring.
36,043	40	1¼-in. charging-valve piston ring.
36,415	41	Charging-valve seat.
36,560	42	Charging-valve washer.
36,558	43	Internal charging-valve nut.
36,559	44	External charging-valve nut.
36,399	45	Gasket for release regulating cap.
32,144	75	Body, bushed.
32,145		Piston, complete, includes 76, 78, 81, 82 83, 84, and 85.
32,027	76	Piston-stem, complete, includes 77.
15,013	77	Piston ring, small.

Pc. No.	*Ref. No.*	*Name of Part*
31,558	78	Piston head, complete, includes 79 and 80.
30,603	79	Piston seal.
45,055	80	Piston ring, large.
31,429	81	Piston follower.
31,491	82	Piston-packing leather.
31,529	83	Piston-packing-leather expander.
31,440	84	Piston nut.
12,270	85	Piston cotter, $\frac{3}{32}$-in.$\times 1\frac{1}{4}$-in.
32,030	86	Exhaust valve.
33,556	87	Exhaust-valve spring.
32,031	88	Application valve.
14,281	89	Application-valve spring.
32,032	90	Application-piston bolt.
36,810		Spring box, complete, includes 91, 92, 93, and 94.
36,395	91	Spring box.
36,384	92	Piston-spring sleeve.
36,406	93	Piston spring.
36,387	94	Graduating nut.
32,033	95	Application-valve cover.
32,044	96	Application-valve cover gasket.
24,496	97	Square head capscrew for application-valve cover, $\frac{3}{8}$-in.$\times 2\frac{1}{2}$-in.
36,457	107	Body, bushed and plugged, includes 119.
36,762	108	Piston, complete, includes 109.
10,030	109	Piston ring.
36,686	110	Slide valve.
32,045	111	Slide-valve spring.
36,458	112	Small cylinder cap.
36,460	113	Large cylinder cap.
36,459	114	Small cylinder-cap gasket.
36,462	115	Large cylinder-cap gasket.
18,286	116	Piston spring.
25,418	117	Square head capscrew, $\frac{1}{2}$-in.$\times 1\frac{1}{2}$-in.
32,106	118	Oval fillister head capscrew.
31,928	119	Emergency-piston bush.
36,049	130	Body, bushed and plugged.
9,753	131	Piston, complete, includes 132.
1,791	132	Piston ring.
50,527	133	Quick-action valve, includes 134 and 135
1,737	134	Quick-action valve seat.
1,794	135	Quick-action valve nut.
49,932	136	Quick-action-valve spring.
43,533	137	Quick-action-valve cap nut.
36,080	138	Quick-action-valve cover, bushed.
27,195	139	Quick-action closing valve.
25,598	140	Quick-action closing-valve spring.
25,597	141	Cover cap nut.
36,053	142	Cover gasket.
25,418	143	Square head capscrew for cover, $\frac{1}{2}$-in.$\times$ $1\frac{1}{2}$-in.

Pc. No.	Ref. No.	Name of Part
32,156	153	Reservoir, complete, includes four of 154, seven of 155, twelve of 156, six of Piece No. 1,899.
33,148	154	$1\frac{1}{4}$-in. cap nut.
31,550	155	Stud with hexagon nut $3\frac{3}{4}$ in. long.
32,111	156	Stud with hexagon nut $3\frac{1}{2}$ in. long.
8,728		$1\frac{1}{4}$-in. pipe plug.
34,037	157	Emergency-cylinder gasket.
34,036	158	Quick-action cylinder gasket.
32,008	159	Large reservoir gasket.
32,008	160	Equalizing-cylinder gasket.

Spring Identification of No. 3-E Passenger Control Valve

Pc. No.	Out. Dia. A, In.	Dia. Wire B, In.	Free Height C, In.	No. Coils	Material	Name of Spring
1,057	$\frac{9}{16}$	.059	$2\frac{3}{4}$	16	Nickeled Steel	Upper Equalizing Piston-Stop
1,523	$\frac{39}{64}$	.08	$2\frac{5}{8}$	$13\frac{1}{2}$	Nickeled Steel	Lower Equalizing Piston-Stop
18,286	$\frac{19}{32}$	.072	$2\frac{21}{36}$	15	Nickeled Steel	Emergency Piston
25,598	$\frac{39}{64}$	.057	$1\frac{7}{16}$	9	Phosphor-Bronze	Quick-action Closing-Valve
32,045	$\frac{11}{32}$	.032	$\frac{7}{8}$	$9\frac{1}{2}$	Phosphor-Bronze	Emergency Slide Valve
36,406	1	.135	$5\frac{3}{8}$	$18\frac{1}{2}$	Nickeled Steel	Release-Graduating & Application Piston
49,932	$\frac{35}{64}$	.08	$1\frac{21}{32}$	$11\frac{1}{2}$	Nickeled Steel	Quick-Action Valve

NO. 3-D PASSENGER CONTROL VALVE

Emergency and Quick-Action Portions.—The No. 3-D passenger control valve differs from the No. 3-E control valve in having the emergency portion reversed in position as shown in the figure.

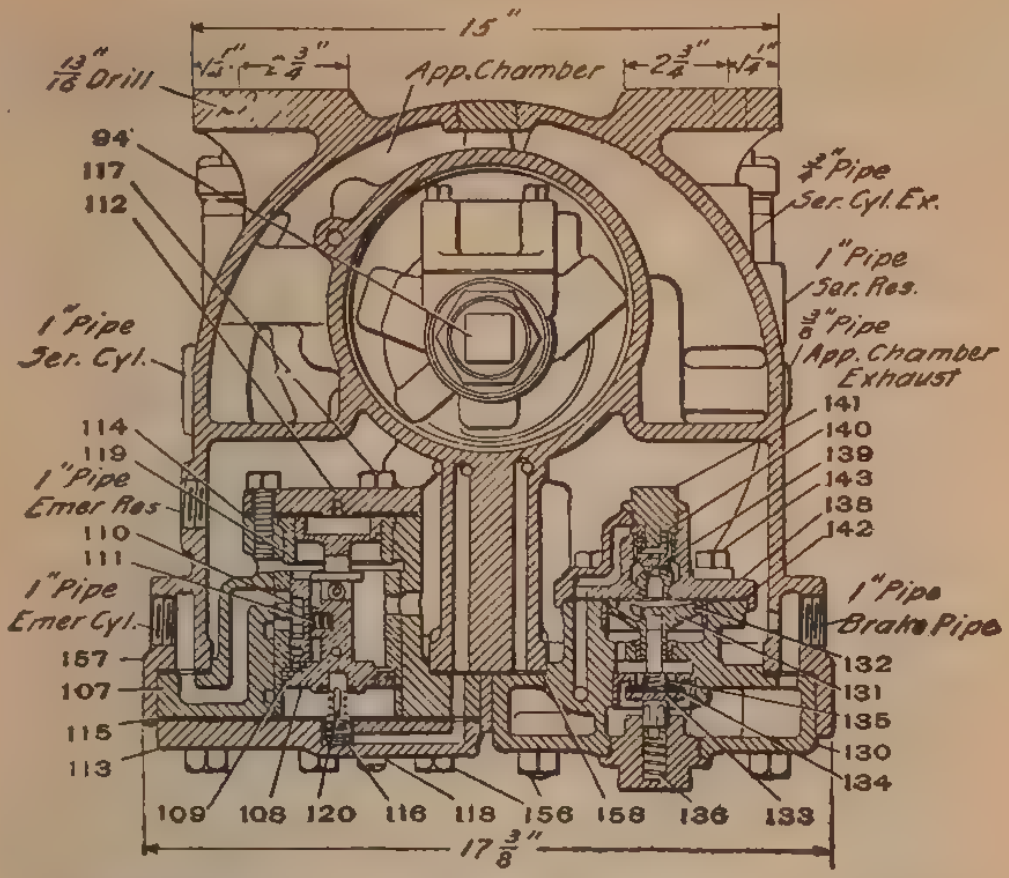

CONSTRUCTION OF CONTROL VALVE

The control valve takes the place of the triple valve of the

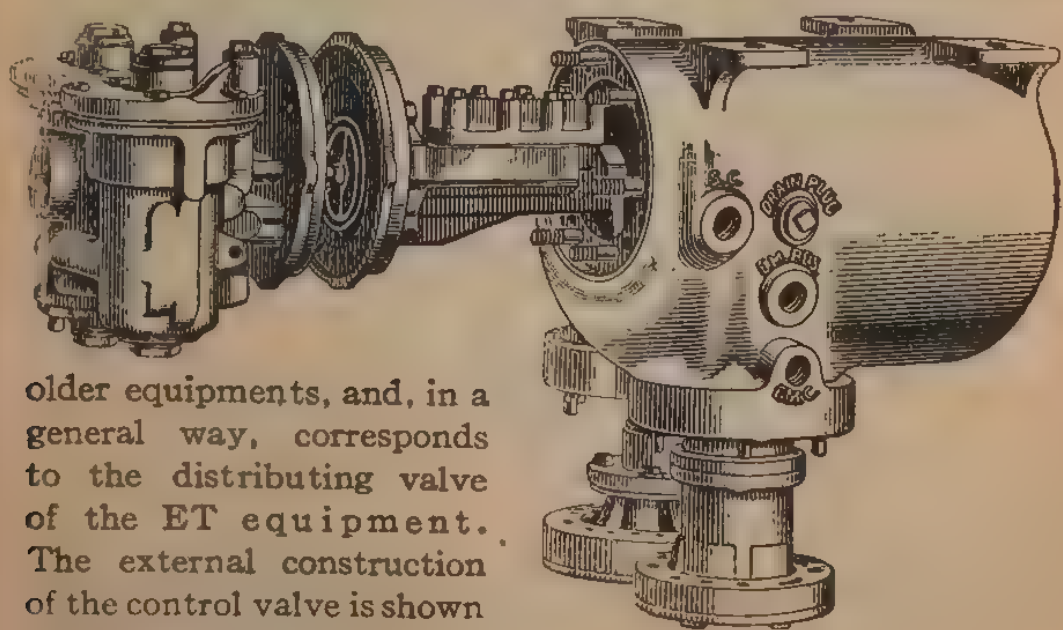

FIG. 1

older equipments, and, in a general way, corresponds to the distributing valve of the ET equipment. The external construction of the control valve is shown in Fig. 1, which gives a

view of the right side of the valve, showing the lines of separation of the *equalizing portion.* It will be observed that the

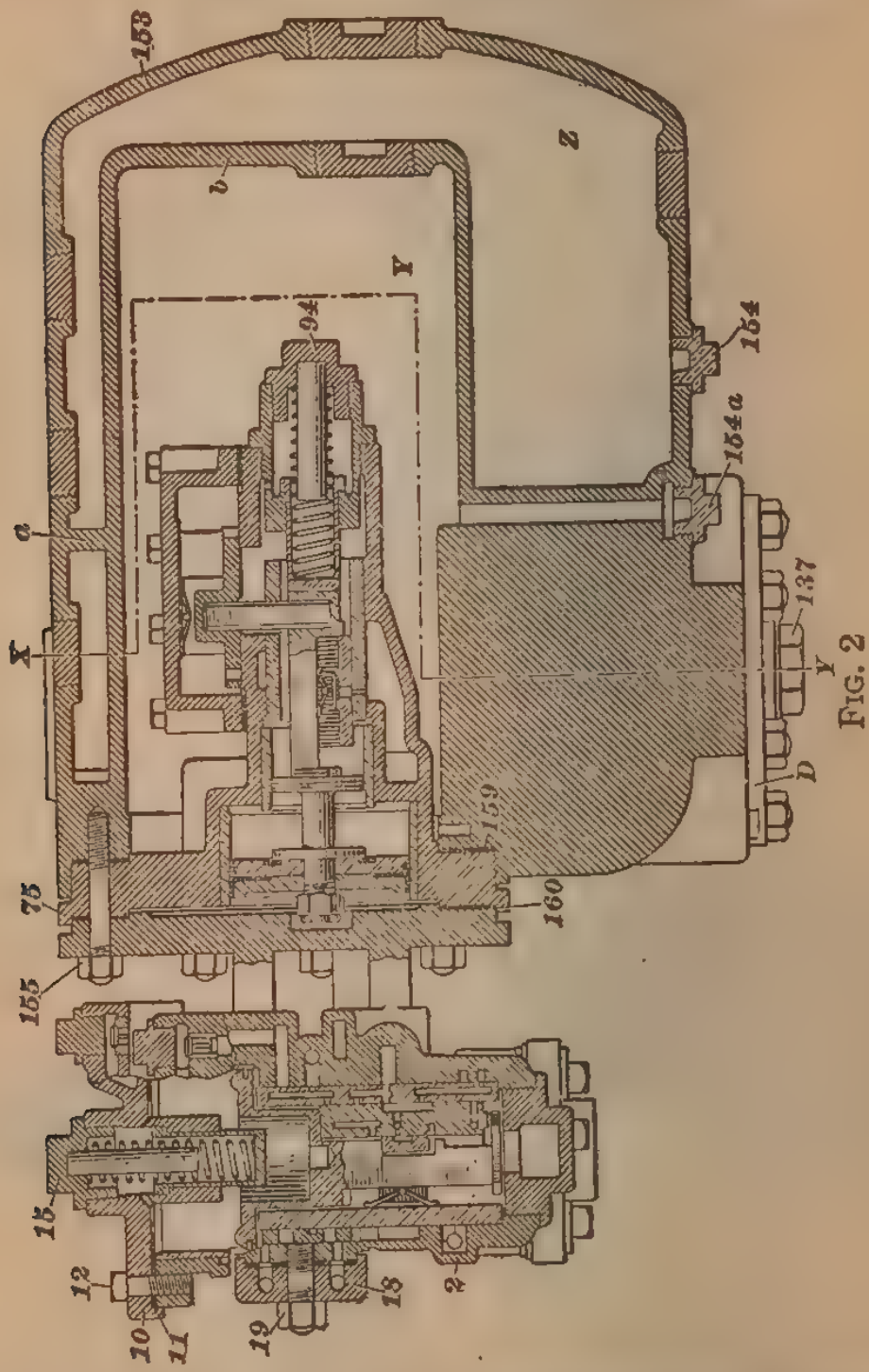

FIG. 2

application, quick-action, and emergency portions extend into the reservoir *B* when in place, so that when the control valve is assembled only the flanges of these portions are visible.

Compartment Reservoir.—Sectional views of the control valve are shown in Figs. 2 and 3 in order to illustrate how the reservoir is divided into compartments. Fig. 2 is a section taken lengthwise through the center line of the reservoir, and Fig. 3 a section taken crosswise of the reservoir on the line *X Y*, Fig. 2, the part to the right of the line being removed and the reservoir turned so as to show the section of the front portion

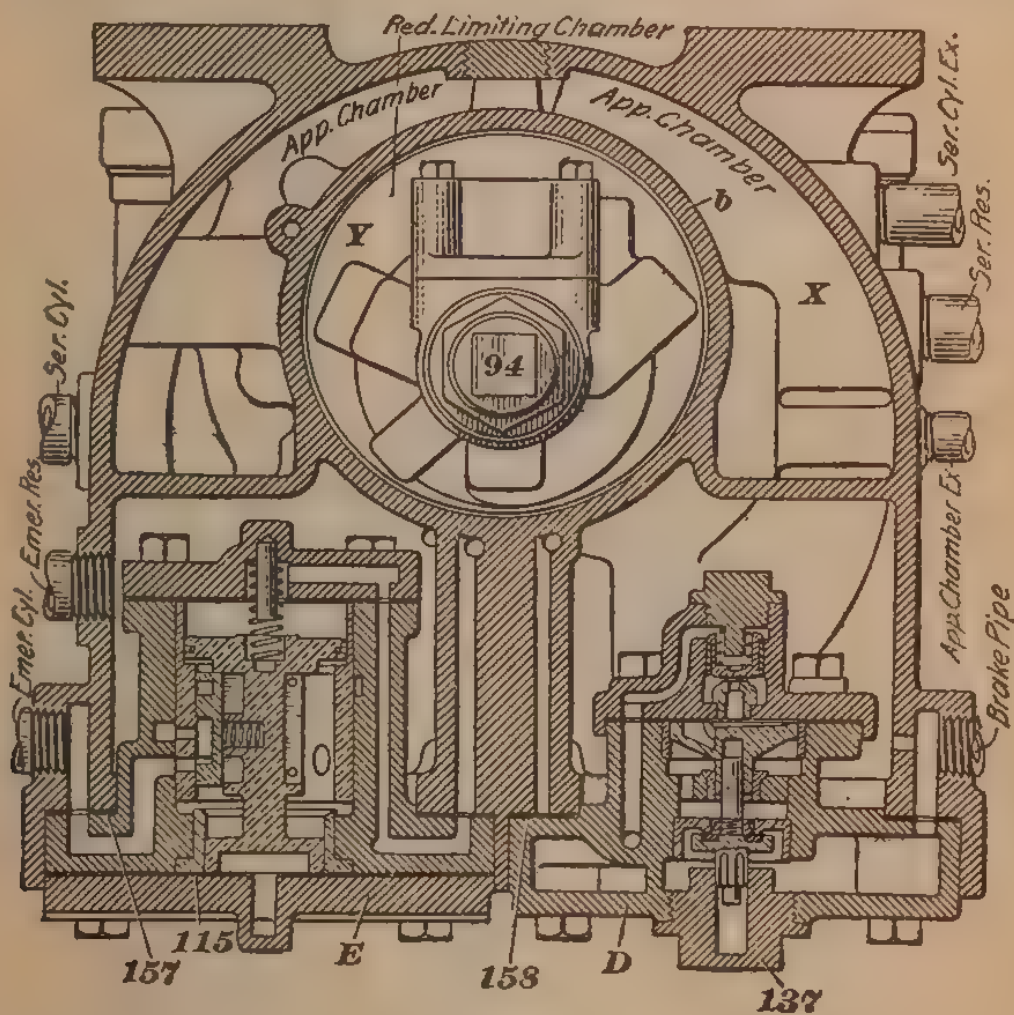

FIG. 3

of the reservoir. It will be observed that there are three chambers or compartments in the reservoir.

The *application chamber X* extends from the partition *a*, Fig. 2, forwards, and also on both sides of the reduction-limiting chamber *Y*, like a pair of saddle bags. There is a drain plug on each side of the compartment reservoir, so that each leg of

the application chamber can be drained. At *157*, Fig. 3, is shown the emergency-cylinder gasket; at *158*, the quick-action-cylinder gasket; at *159*, Fig. 2, the large-reservoir gasket; and at *160*, the equalizing-cylinder gasket. The functions of the application chamber are similar to those of the application chamber of the ET equipment.

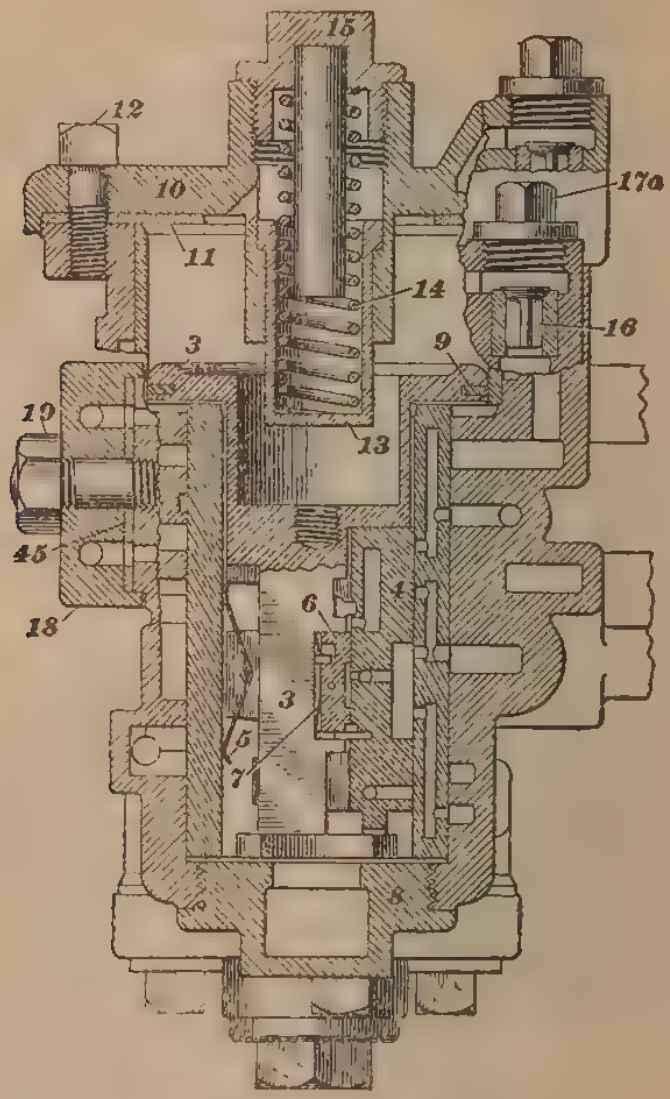

FIG. 4

The *reduction-limiting chamber* *Y* is the space contained within the inner reservoir wall *b*. The application portion of the control valve extends into this space, but it is not in any way open to chamber *Y*. The function of the reduction-limiting chamber is to limit the service braking power to a predetermined amount by maintaining the equalization of the pressure

and application chambers of the control valve. If, after equalization has taken place, a further brake-pipe reduction occurs, air is automatically vented from the pressure chamber into the reduction-limiting chamber, up to the point of equalization, fast enough to maintain the pressure-chamber pressure constant at the pressure of equalization. This, of course, maintains the application-chamber pressure constant, which

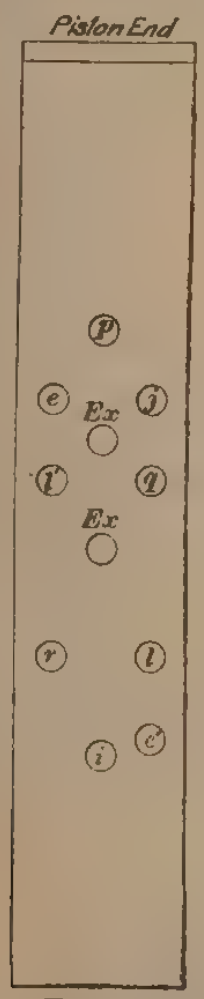

FIG. 5

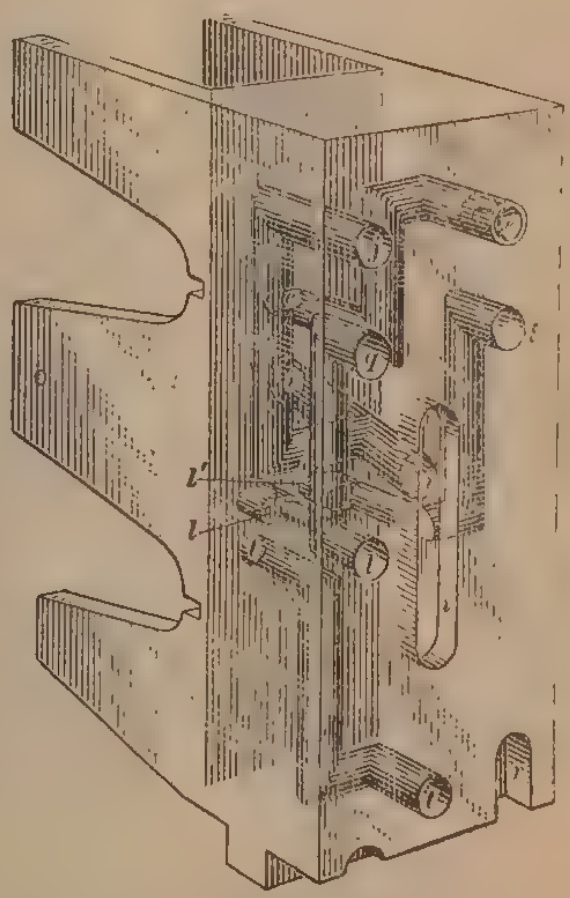

FIG. 6

automatically maintains the brake-cylinder pressure constant The capacities of the application and the pressure chambers are such that, with a 24-lb. reduction from 110 lb. of brake-pipe pressure, they will equalize at 86 lb.; from 70 lb. of brake-pipe pressure, they will equalize at 54 lb. with a 16-lb. reduction.

In Fig. 2, the drain plug for the reduction-limiting chamber is shown at *154a*.

The *pressure chamber Z* extends backwards from the partition *a*, Fig. 2, and surrounds the inner-reservoir wall *b*, as shown; the drain plug for this reservoir is numbered *154*.

Equalizing Portion.—The *equalizing portion* of the control valve consists of two parts, the release portion, and the equalizing portion. The *release cylinder* is shown in section in Fig. 4. The *release slide-valve seat* is shown in Fig. 5. Port *p* leads to chamber *P* of the large emergency piston; port *j*, to chamber *S* of the small emergency piston; port *e*, to the direct and

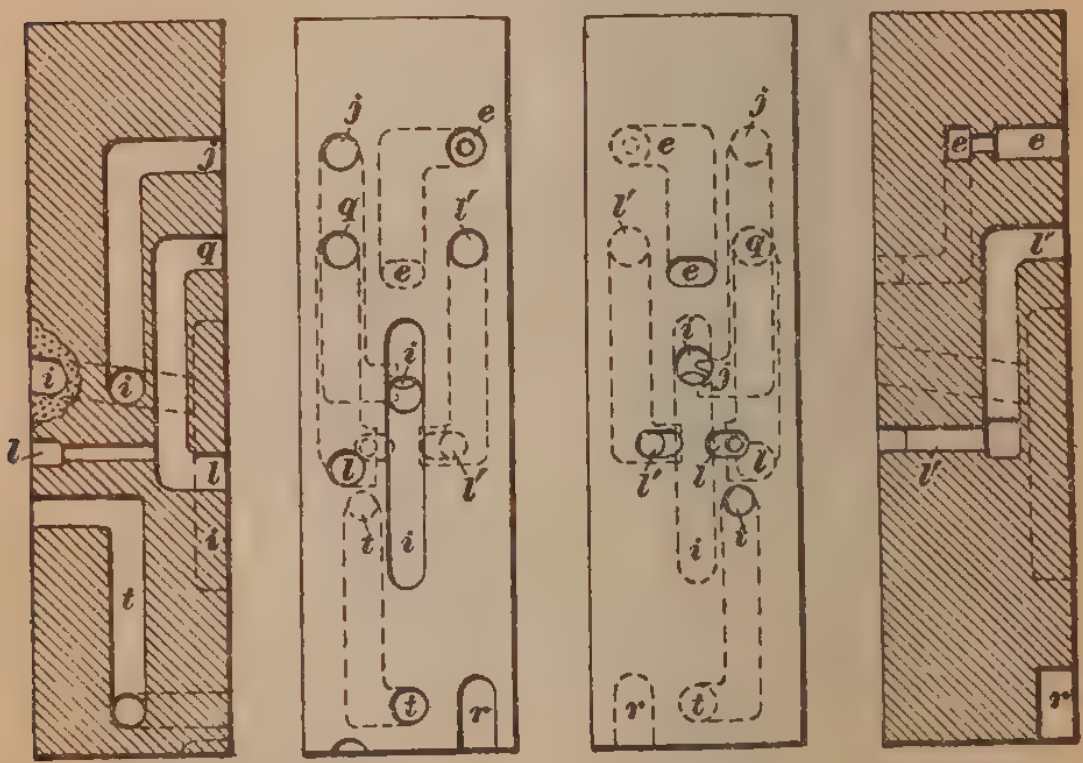

FIG. 7

graduated release cap *18;* ports *Ex*, to the emergency-piston exhaust; port *q*, to the direct and graduated release cap; port *l'*, to the application-chamber exhaust and to the direct and graduated-release cap; port *l*, to the application chamber; port *r*, to the quick-action closing valve; port *c'*, to the emergency reservoir; and port *i*, to chamber *F* of the small equalizing piston.

The *release slide valve* is shown in Figs. 6 and 7. Fig. 7 (*a*) is a sectional view; (*b*), a plan of the face of the valve; (*c*),

a plan of the top of the valve; (*d*), a vertical section, showing the ports *e*, *l'*, and *r*. Port *e* extends through the valve, as shown. Port *i* leads from the cavity *i* in face of the valve to the upper face of the valve; port *j*, from the face of the valve into port *i*; and port *l'*, from the face of the valve to the small port *l'* in the upper face. Port *l* connects with port *q* and leads to the small port *l* in the upper face. At *r* is shown a tail-port, or groove, in the end of valve. Port *t* leads from the face of the valve to the small port *t* in the upper face.

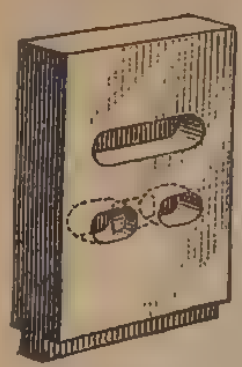

FIG. 8

The *release valve graduating valve*, Fig. 8, merely has two

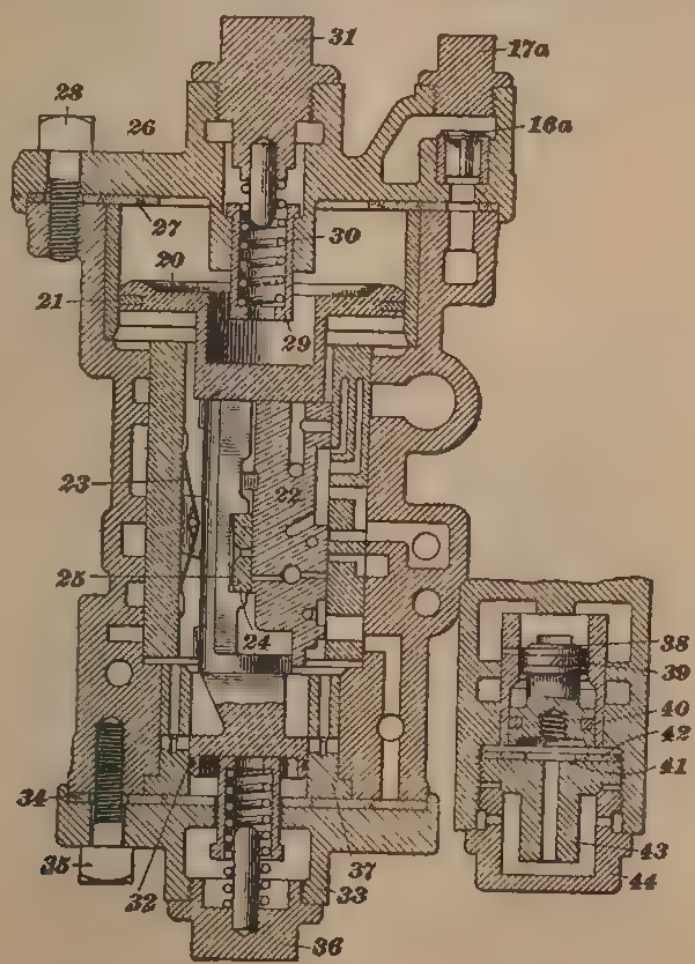

FIG. 9

cavities in its face. One of these cavities is always connected to the emergency-piston exhaust in all positions of the valve,

so as to release the pressure on that part of the valve and insure sufficient differential pressure on the valve to hold it on its seat at all times.

Equalizing Cylinder.—The *equalizing cylinder* is shown in section in Fig. 9. The *equalizing slide-valve seat* is shown in

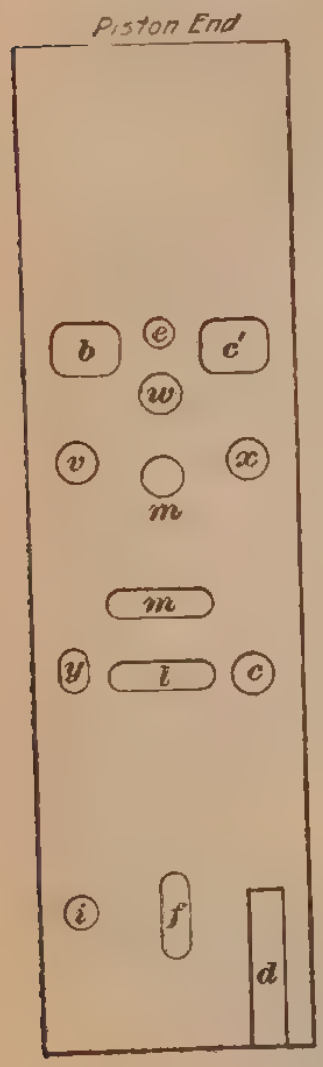

FIG. 10

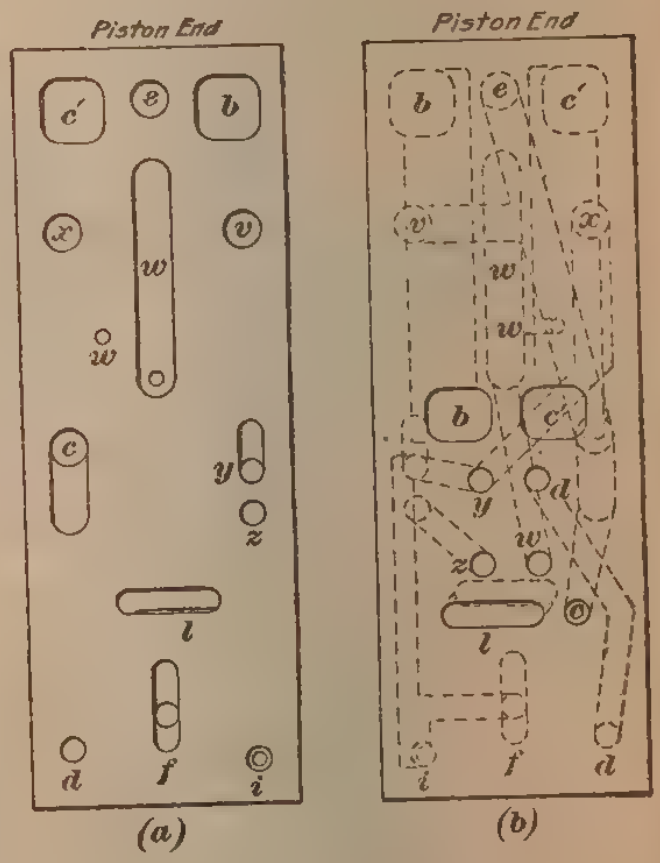

FIG. 11

Fig. 10. Port *c* leads to the emergency reservoir; port *c'*, to the under side of the emergency-reservoir check-valve; port *b*, to the brake-pipe through chamber *B*; port *e*, to the direct and graduated release cap *18*; port *w*, to the reduction-limiting chamber exhaust; and port *v*, to chamber *G*, the small end of the service-reservoir charging valve. Ports *m* unite and lead

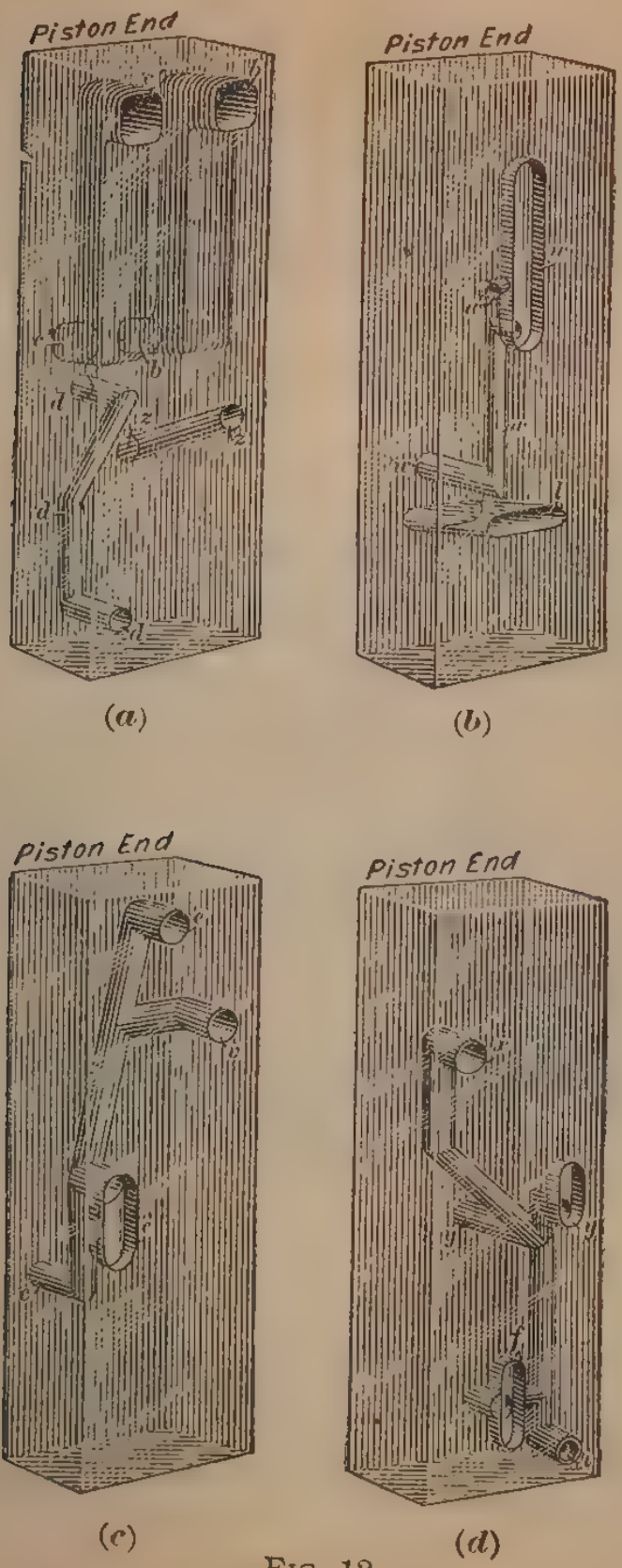

(a) (b) (c) (d)

FIG. 12

to the reduction-limiting chamber *Y*. Port *x* leads to chamber *K*, the large end of the service-reservoir charging valve; port *y*, to chamber *E* of the release slide-valve chamber; port *l*, to chamber *C*, the application chamber, and the front of application piston; port *c'*, to the emergency reservoir; port *f*, to the pressure chamber *Z*; and port *i*, to chamber *F* of the small equalizing piston. The slotted tail-port in the end of the valve is shown at *d*.

The *equalizing slide valve* is shown in Fig. 11, (*a*) being a view of the face of the valve and (*b*) a view of the top of the valve.

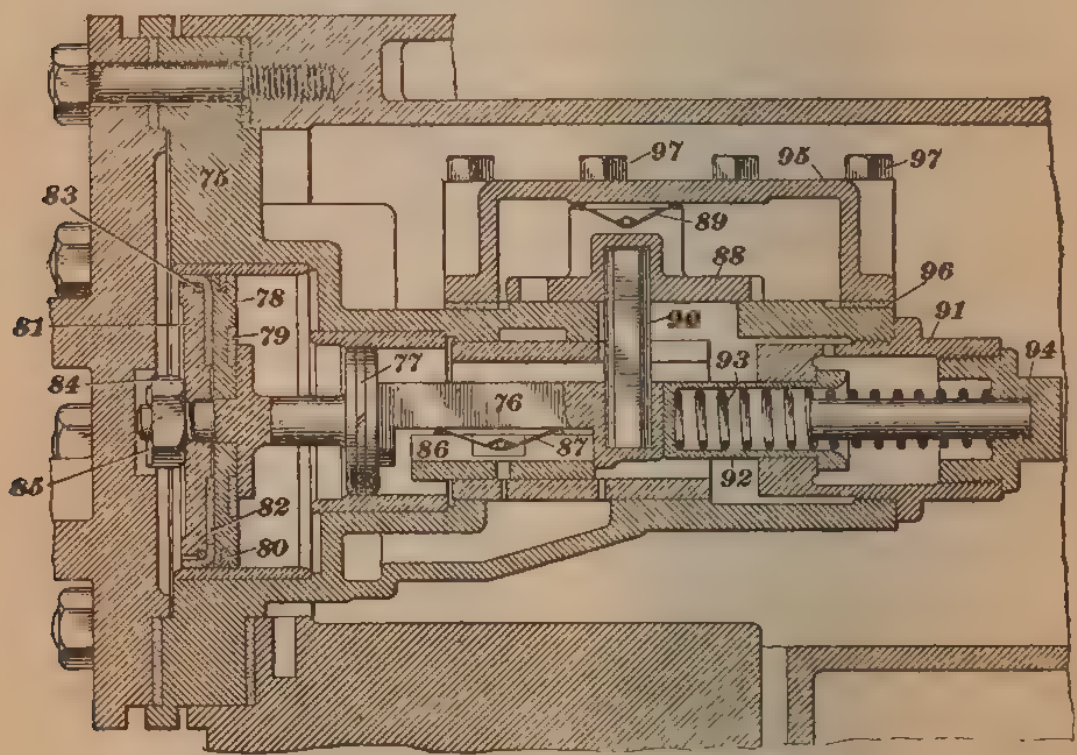

FIG. 13

There are so many ports in this valve and they are so intertwined that it is impossible to make one illustration that will show the relations of all the ports. The views in Fig. 11, therefore, will be used to show the exact relation of the ports on the two faces of the slide valve, and those in Fig. 12, to show the ports that connect with each other and at the same time show how they are situated in the valve. Fig. 12 (*a*) shows how the ports *b*, *c'*, *d*, and *z* pass from the lower to the upper face of the valve without connecting with any other port or passage.

Ports *b* and *c'* pass through the valve in a similar manner. View (*b*) shows the location of ports *w* and *l* and illustrates how they too pass through the valve without connecting with other ports or passages. View (*c*) shows how port *c* leads from the bottom face of the valve to the top face, and how it connects with the ports *e* and *v* of the valve. View (*d*) shows how the port *y* passes from face to face of the valve and connects with

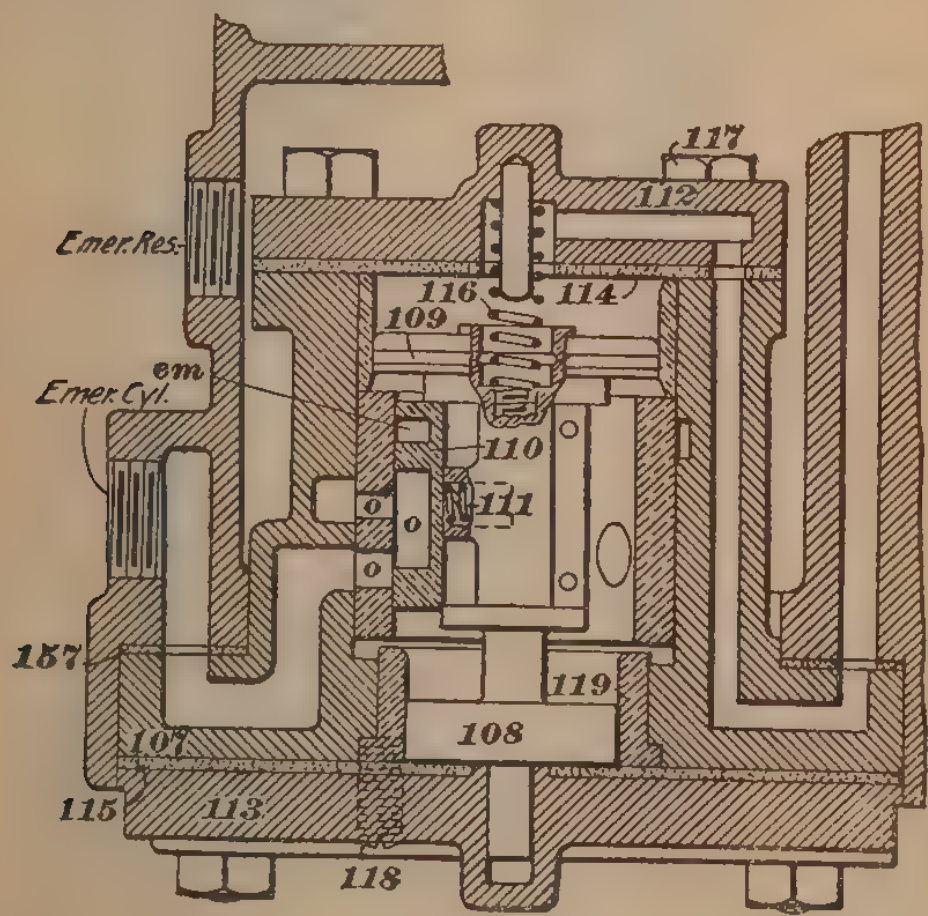

FIG. 14

the ports *f*, *i*, and *x*. It will be noted that port *i* is bushed, or restricted, at the lower face of the valve. The equalizing graduating valve has simply a cavity in the face of the valve.

Application Portion.—The application portion is shown in section in Fig. 13. It will be observed that the construction and operation of this portion of the control valve is similar to the construction and operation of the application portion of the distributing valve of the ET equipment.

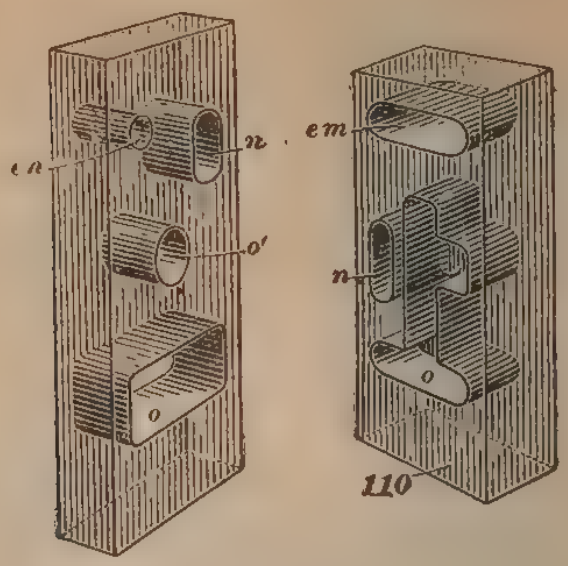

(a) FIG. 15 (b)

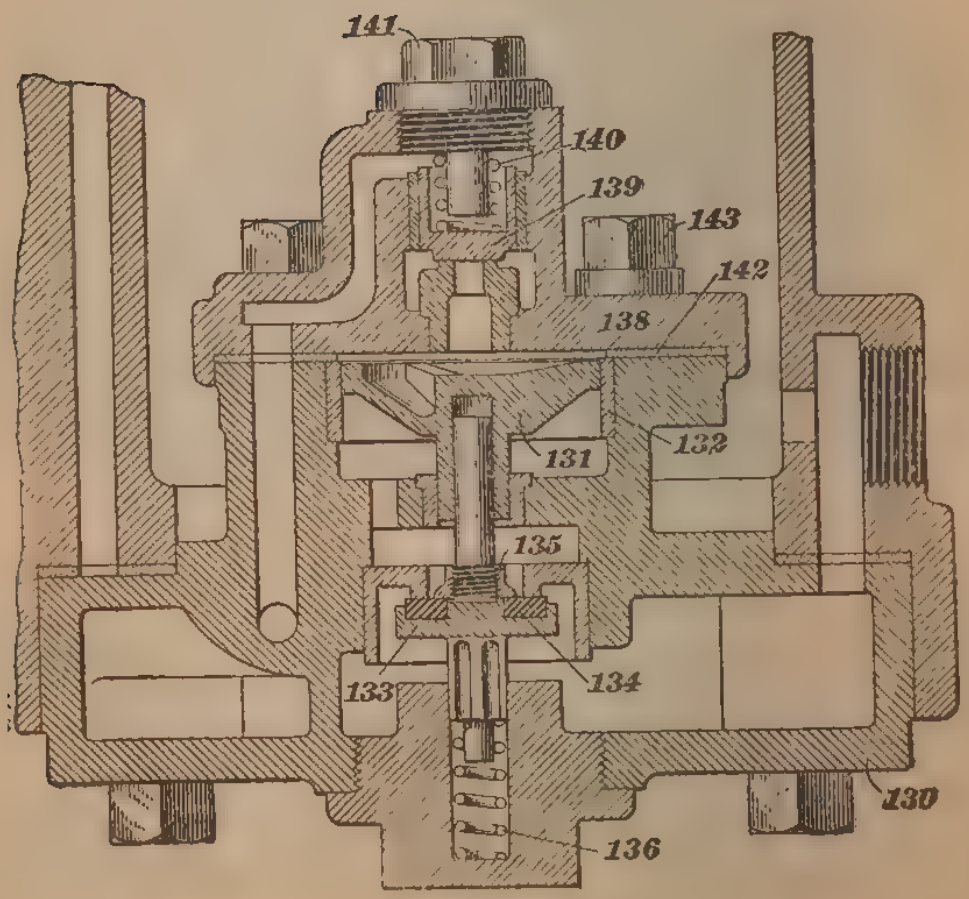

FIG. 16

Emergency Portion.—The emergency portion of the control valve is shown in section in Fig. 14. The *emergency slide valve and seat* are shown in Fig. 15, in which view (*a*) shows the valve seat and (*b*) the slide valve. In view (*a*), port *n* leads to the service brake cylinder; port *en*, to chamber *M*, back of the application piston; port *o'*, to the emergency-cylinder exhaust; and port *o*, to the emergency cylinder. In view (*b*), port *n* passes through the valve. Both *em* and *o* are cavities in the face of the valve.

Quick-Action Portion.—The quick-action portion is shown in section in Fig. 16.

OPERATION OF CONTROL VALVE

Diagrammatic View.—The control valve contains so many parts, ports, and passages that it would be impossible to describe its operation clearly without the use of a diagrammatic view, which is here given.

It will be noted that port *a* leads from the brake-pipe connection to chamber *Y*, below the quick-action valve *133*; also, that it leads into chamber *B*, ahead of the release piston *3*, and into chamber *A*, ahead of the equalizing piston *20*. Port *b* leads from chamber *B*, through the equalizing check-valve *16*, to port *b* in the equalizing slide-valve seat. Port *c* leads from the face of the equalizing slide-valve seat to the top side of the emergency check-valve *16a*; continuing, it divides and one branch leads to port *c* in the release slide-valve seat, and the other branch leads to chamber *R*, between the two emergency pistons and to the emergency reservoir. Port *c'* leads from port *c'* in the equalizing slide-valve seat to the under side of the emergency check-valve *16a*. Port *e* leads from the equalizing slide-valve seat to the direct and graduated release cap *18*, thence to port *e* in the release slide-valve seat. Port *f* leads from the port *f* in the equalizing slide-valve seat to pressure chamber *Z*; it also leads to the under side of the pressure-chamber check-valve *16b*. Port *g* leads from the service reservoir into the application chamber *N*; also, a branch leads to chamber *H* between the two pistons of the service-reservoir charging valve. Port *h* leads from chamber *E*, surrounding

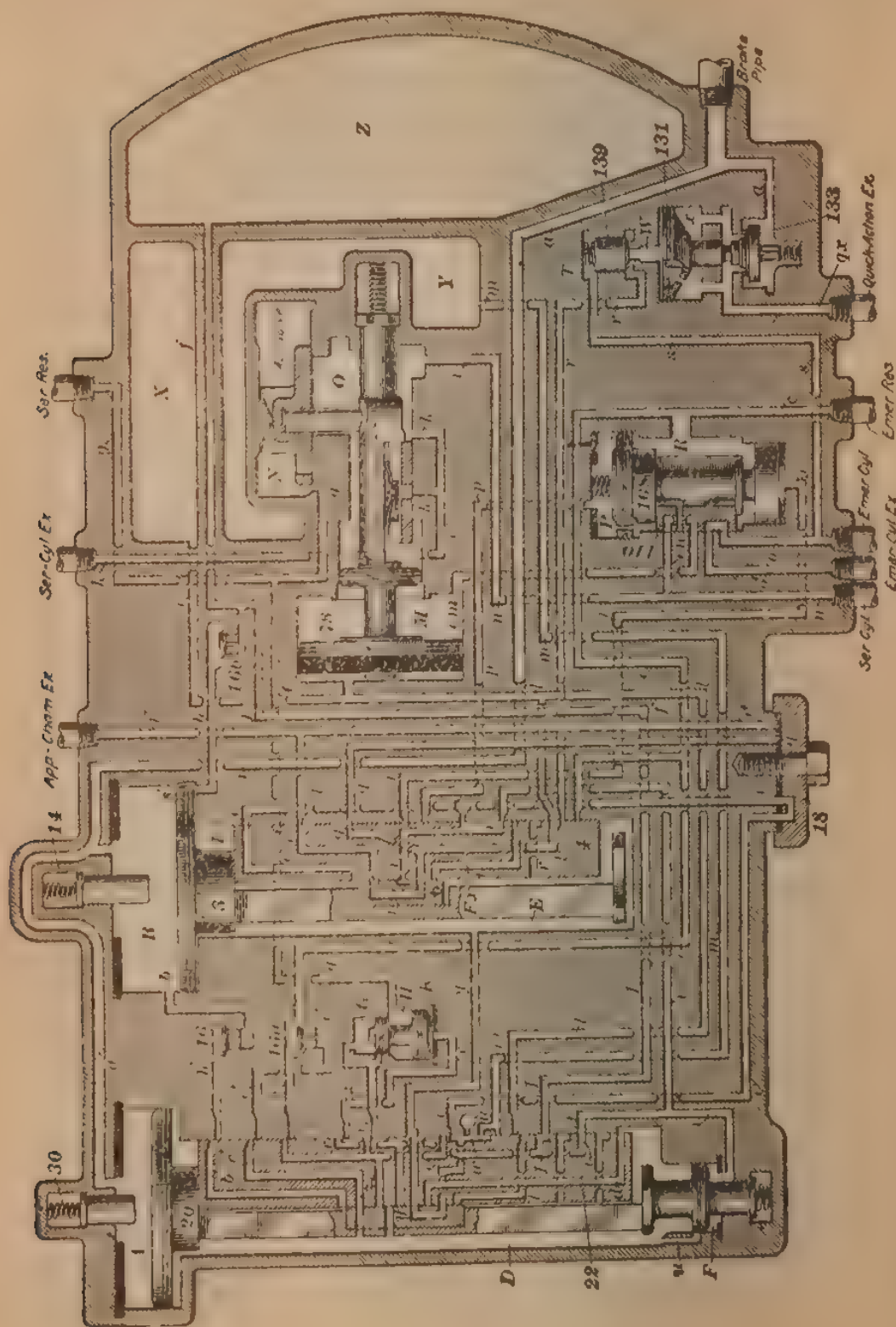
Brake Pipe
Quick-Action Ex.
Emer. Res.
Emer. Cyl.
Emer. Cyl. Ex.
Ser. Cyl.
Ser. Cyl. Ex.
App.-Chan. Ex.
Ser. Res.
Z
Y
X
131
139
133
qx
18
14
30
20
22
D
F
E
R
S
M
N
O
K
T

the release slide valve, to the upper side of the pressure-chamber check-valve *16b*. Port *i* leads from the release slide-valve seat to the port *i* in the equalizing slide-valve seat; also, a branch leads to chamber *F*, surrounding the equalizing piston stop. Port *j* leads from the release slide-valve seat to the chamber below the small piston of the emergency valve *108*. Port *k* connects the two ports in the application-valve seat and leads to the service-cylinder exhaust. Port *l* leads from the equalizing slide-valve seat to the application chamber *X*; also, one branch leads to port *l* in the release slide-valve seat, and a second branch to chamber *C*, ahead of the application piston *78*. Port *l'* leads from the release slide-valve seat to the application-chamber exhaust; also, a branch leads to the direct and graduated release cap *18*. Port *m* connects the two ports *m* in the equalizing slide-valve seat and leads to the reduction-limiting chamber *y*. Port *em* leads from chamber *M*, back of piston *78*, to the emergency slide-valve seat. Port *n* leads from the service cylinder to chamber *O*, in the application portion; also, it is connected by a branch *en* with port *en* of the emergency slide-valve seat. Port *o* leads from the emergency slide-valve seat to the emergency cylinder. Port *o'* leads from the emergency slide-valve seat to the emergency-cylinder exhaust. Port *p* leads from the release slide-valve seat to the chamber *P*, above the emergency piston *108*. Port *q* leads from the release slide-valve seat to the direct- and graduated-release cap *18*. Port *r* leads from the release slide-valve seat to chamber *W* below the quick-action closing valve *139*. Port *s* leads from the chamber *T* above the quick-action closing valve *139* into the passage *o*. Port *u* leads from the chamber *D* surrounding the equalizing slide valve to such a position in the small equalizing piston bush *37*, that when the piston is in certain positions, the port connects chamber *D* with chamber *F*. Port *v* leads from the equalizing slide-valve seat into the chamber *G* above the small piston of the service-reservoir charging valve. Port *x* leads from the equalizing slide-valve seat to the chamber *K* below the large piston of the service-reservoir charging valve. Port *y* leads from the equalizing slide-valve seat to the chamber *E* surrounding the release valve. Port *qx* leads from chamber *x*, below quick-action piston *131*, to the quick-action exhaust.

Release and Charging Position.—In the release and charging position of the control valve, the parts are in position to release the brake and to charge the pressure chamber and the emergency and the service reservoir. In charging the equipment, air enters at the brake-pipe connection and passes through port *a* into chamber *B* and chamber *A*, thereby forcing the equalizing piston *20* to release position. This causes port *b'* of the equalizing slide valve to register with port *b'* of the valve seat and permits brake-pipe air to pass from chamber *B*, through port *b*, the equalizing check-valve *16*, and ports *b'*, into chamber *D*. It will be noted that there is no feed-groove for piston *20*. Also, port *c'* of the slide valve registers with port *c'* in the seat, so that air from chamber *D* flows through ports *c'*, raises the emergency-reservoir check-valve *16a*, and passes through port *c* to chamber *R* and to the emergency reservoir. Some of the air that passes the check-valve *16a* flows through port *e* of the slide valve *22* and port *e* of the valve seat to the direct- and graduated-release cap *18*, thence through port *e* in the release slide valve into chamber *E*, as shown. In passing through port *e* of the slide valve *22*, part of the air branches off at port *v* and passes through chamber *H* of the service-reservoir charging valve and port *g* to the service reservoir and to chamber *N* in the application portion.

From chamber *B*, brake-pipe air also flows through the feed-groove *s'* into chamber *E*, so that this chamber charges by two paths. Air from chamber *E* passes through port *y*, thence through port *f* of the slide valve *22* and through port *f* of the valve seat direct to the pressure chamber *Z*, charging this chamber to brake-pipe pressure. Part of the air passing through port *y* of slide valve *22* passes through port *x* of the slide valve and seat into chamber *K* below the large piston of the service-reservoir charging valve. This gives brake-pipe pressure in both chambers *G* and *K* and a service-reservoir pressure, which is much lower, in chamber *H*, so that the service-reservoir charging valve is held in the position shown until recharging is completed by the greater upward pressure on the large piston. The chamber *K* is relatively small and the ports leading to it are large enough to charge it more quickly than the chambers *G* and *H*.

Chamber *F*, at the small end of the equalizing piston, is connected to the atmosphere through the port *i*, cavity *i* in the release slide valve, and the emergency-piston exhaust *Ex*, thereby removing the pressure on the small piston that tends to force the piston forwards. This makes the force of the pressure, in chamber *A*, that tends to hold the big piston in position greater than the force due to the pressure in chamber *E* that tends to move the equalizing piston forwards, so that the piston is held in the position shown.

Chamber *S* is connected to the atmosphere through port *j*, the cavity *i* in the release slide valve *4*, and the emergency-piston exhaust *Ex*. This removes the pressure on the lower end of the small piston and makes the force of the pressure in chamber *P* greater than the force, in chamber *R*, that tends to move the emergency piston, so that the piston is held in the position shown.

The reduction-limiting chamber *V* is connected to the atmosphere through the port *m*, the cavity *w* in the slide valve *22*, and the reduction-limiting chamber exhaust *w*.

The application chamber *X* and the chamber *C* ahead of piston *78* are connected to the atmosphere through port *l*, port *l* in the release slide valve *4*, port *l'*, and the application-chamber exhaust.

The service cylinder and chambers *M* and *O* are connected to the atmosphere through ports *n*, *em*, and *en*, chamber *O*, port *k*, and the service-cylinder exhaust.

The emergency cylinder is connected to the atmosphere through port *o*, the cavity in the emergency slide valve, port *o'*, and the emergency-cylinder exhaust *Ex*.

The small cavity in the release graduating valve is connected to the atmosphere through port and cavity *i* in the slide valve *4* and the emergency-piston exhaust *Ex*. This relieves the face of the graduating valve of sufficient pressure to insure the graduating valve being held firmly on its seat under all conditions.

Preliminary Service-Application Position.—A reduction in brake-pipe pressure lowers the pressure in chambers *A* and *B* below that in chambers *D* and *E*, thus tending to move both the pistons *20* and *3* forwards from release position. Piston *3*

moves with a less differential pressure, however, owing to the fact that the chamber *F* at the small end of the piston *20* is open to the atmosphere in release position, thus reducing the area that chamber-*D* pressure acts on. A greater reduction in brake-pipe pressure, therefore, is necessary to move piston *20* than to move piston *3*, so that during a brake-pipe reduction piston *3* moves first. There is a small amount of space between the graduating valve and the release piston, and considerably more between the release slide valve and the release piston. When sufficient brake-pipe reduction is made to overcome the friction of the piston *3*, the piston moves forwards, and when it strikes the graduating valve it moves that valve forwards, until, finally, it strikes against and moves the slide valve to the preliminary service position, and the parts assume this position only momentarily on their way to service position. In this position, the piston *3* has moved past the feed-groove *s'* and has come to rest against the release graduating sleeve *14*, as shown.

In moving the slide valve, port *l*, leading from the application chamber to the application-chamber exhaust, is closed. The reduction-limiting chamber *Y*, the service cylinder, the emergency cylinder, and the chambers *O* and *M* are all still open to the atmosphere. The connection between chamber *F* and the atmosphere is now closed, and chamber *F* is connected through port *i* and port *t* of the release slide valve with chamber *E*, and thence through port *h*, check-valve *16b*, and port *f*, with the pressure chamber *Z*, thus charging chamber *F* to pressure-chamber pressure and equalizing the pressures on the two faces of the small piston.

Secondary Service-Application Position.—The instant that the pressures on the two faces of the small piston of the equalizing valve are equalized, the pressure in chamber *D* exerts a force on piston *20* that is greater than that of the pressure in chamber *A*; hence the equalizing valve is moved forwards toward service position. During this movement it momentarily assumes secondary service position. In this position, the shoulder on the end of the piston stem is just against the slide valve *22*; also, port *e* of the slide valve registers with port *c* and the graduating valve uncovers port *c* in the top of the slide valve,

so that there is a momentary connection between the emergency reservoir and chamber *D* while the slide valve is moving past the secondary service position. The object of this is to charge chamber *D* from the emergency reservoir an amount sufficient to compensate for the increase in volume in chamber *D* as the piston *20* moves forwards to service position, and thus prevent a drop in chamber-*D* pressure due to the increased volume. Also, momentary connection is made between chamber *D* and the pressure chamber *Z* through the groove *d* in the equalizing-valve seat, port *d* in the valve face, the cavity *dw* in the graduating valve, and ports *f* in the slide valve and seat. This prevents chamber *D* from being highly overcharged and maintains the pressures in chambers *D* and *Z* equal. The pressure in chamber *E* is maintained equal to the pressure in chamber *Z* through port *f*, check-valve *16b*, and port *h* as the piston *3* moves forwards. In fact, during an application of the brakes, this connection practically makes chambers *E* and *Z* but one chamber in volume; that is, during a reduction the connection through the check-valve *16b* maintains the pressure equal in the two chambers, so that to reduce the pressure in chamber *E*, the pressure in chamber *Z* must be reduced a like amount.

Service Position.—The piston *20* moves forwards from secondary service position to service position, where it is stopped by the equalizing graduating spring *30*. In this position, port *u* connects chambers *D* and *F*, thus equalizing the pressures in the two chambers. The pressure chamber has a direct connection to chamber *D* by way of port *f* and a port through the equalizing slide valve *22*. Also, it has an indirect connection with chamber *D* through the check-valve *16b*, port *h*, chamber *E*, port *t* of the slide valve *4*, and port *i*; port *i* divides, one branch leading to chamber *F* and the other to a port in the equalizing slide valve. These two paths make provision for a considerable volume of air to flow from the pressure chamber into chamber *D*.

Pressure-chamber air, after flowing to chamber *D*, can pass through port *l* in the slide valve *22* and port *l* in the valve seat to chamber *C* ahead of the application piston *78*, and to the application chamber *X*. The pressure thus admitted into chamber *C* moves piston *78* backwards to its application

position, compressing the application-piston spring *93*. In this position, the exhaust valve closes the service-cylinder exhaust ports *k*. The port in the application slide valve is opened and permits air from the service reservoir to flow through port *g* and chamber *N* into chamber *O*, and through port *n* to the service-brake cylinder, applying the brake with the pressure developed by that cylinder. The pressure in chamber *M* is maintained equal to that in the service cylinder through the port *en*, the cavity in the emergency slide valve, and the port *em*. Air will continue to flow into the service cylinder and chamber *M* until the pressure becomes about equal to the application-chamber pressure on the other face of the piston *78*, when the application-piston spring *93* returns the piston *78* and slide valve back to service lap position. This holds the brakes applied with a service-brake-cylinder pressure about equal to the pressure admitted to chamber *C* and the application chamber. The operation of the application portion of the control valve for all operations of this brake is exactly the same as the operation of the application portion of the distributing valve of the ET equipment. In service position, the emergency-brake cylinder and the reduction-limiting chamber are open to the atmosphere.

Service Lap Position.—As there is direct connection between the chambers *D*, *E*, and *Z* in service position, it follows that any reduction of pressure in chamber *D* will produce a like pressure in chambers *E* and *Z*. When a brake-pipe reduction is made to apply the brake and the parts move to service position, air from chamber *Z* flows by way of chamber *D* into chamber *C* and chamber *X*. The air continues to flow from chamber *D* until the pressure is reduced sufficiently below brake-pipe pressure to overcome the resistance of the piston *20*, when the equalizing valve will be moved back to service lap position. It makes no difference in the operation of the control valve whether the piston *3* moves to lap position or not, because it is the equalizing graduating valve that laps port *l*, thus stopping the flow of air into the application chamber *X* and holding the pressure that was built up in chamber *C*. The pressure in chamber *C* determines the pressure in the brake cylinder, because brake-cylinder pressure is automatically maintained equal to chamber-*C*

pressure by the application portion, as follows: Any reduction in brake-cylinder pressure reduces chamber-*O* pressure and causes chamber-*C* pressure to force piston *78* backwards and open the port in the application valve. Air from the service reservoir, therefore, flows through chamber *N* into chamber *O* and the brake cylinder until chamber-*O* pressure is enough greater than chamber-*C* pressure to overcome the frictional resistance of the piston *78*, when the application valve closes and cuts off the flow of air to the brake cylinder. The pressure-maintaining feature of the control valve is the same as that of the ET distributing valve. As will be noted, both chamber *Y* and the emergency-brake cylinder are open to the atmosphere.

Overreduction Position.—The pressures in chambers *D* and *E* cannot be reduced below the pressure of equalization of the pressure chamber and the application chamber, which is 86 lb. from a brake-pipe pressure of 110 lb. and 54 lb. from a brake-pipe pressure of 70 lb. If the brake-pipe pressure is reduced below the pressure of equalization—that is, if an overreduction is made—the equalizing piston will be moved by chamber-*D* pressure beyond its service position to the overreduction position. In this position, the equalizing piston *20* compresses the graduating spring *30* and bottoms against the equalizing-cylinder cap gasket *27*. Release piston *3* remains in service position owing to the higher resistance of the graduating spring *14*, which is stronger than the spring *30*.

In moving forwards into overreduction position, slide valve *22* is moved so as to close, with port *m* of the seat, the port *l* leading to the application chamber and to port *l* of the slide valve. Port *m* leads to chamber *Y*, so that on an overreduction the air from the pressure chamber flows into the overreduction chamber *Y* instead of into chamber *C* and the application chamber. The pressure in chamber *C* is thus held constant at the pressure at which the pressure chamber and the application chamber equalized; hence, the service-brake-cylinder pressure is limited to this amount and maintained equal to it. The reduction-limiting chamber *Y* is of such size that it will equalize with the pressure chamber at about 60 lb. from a pressure-chamber pressure of 86 lb., or at about 35 lb. from a 70-lb. pressure-chamber pressure.

In the overreduction position, chambers *C* and *X* are connected through port *l*, ports *f* and *y* of slide valve *22*, and port *v* of the seat with the chamber *G* above the service-reservoir charging valve. Also, pressure chamber *Z* is connected through port *f*, chamber *D*, ports *c* and *v* of the slide valve, and port *x* of the seat with the chamber *K* below the service-reservoir charging valve. The pressure in chamber *C* and, therefore, in chamber *G* is maintained constant; the pressure in chamber *K* reduces with the pressure-chamber reduction during an overreduction, thus insuring that the service-reservoir charging valve will be held down on its seat.

The service reservoir, the pressure of which is maintained about equal to chamber-*C* pressure by the pressure-maintaining feature of the application portion, is connected through port *g* with chamber *H*. Any slight leakage from the application chamber in this position of the control valve will be supplied from the service reservoir past the packing ring of the service-reservoir charging valve that separates chambers *H* and *G*. The capacity of the service reservoir is relatively large when compared with the capacity of the application chamber; therefore, the pressure in the reservoir will be higher than that in chamber *G* when a leak develops. Reservoir air will thus leak past the piston-packing ring that separates chambers *H* and *G* and prevent any material drop in chamber-*C* and application-chamber pressure. Maintaining chamber-*C* pressure in this manner practically eliminates the possibility of the brakes gradually leaking off, due to application-chamber leakage, because the pressure-maintaining feature of the control valve will automatically maintain brake-cylinder pressure equal to chamber-*C* pressure.

Overreduction Lap Position.—When an overreduction is made, the piston *20* moves to overreduction position. This connects chamber *D* with chamber *Y*, so that the pressure in chambers *D*, *E*, and *Z* gradually reduces by the air discharging into chamber *Y*. When chamber-*D* pressure becomes enough less than chamber-*A* pressure for the latter to overcome the frictional resistance of piston *20*, the piston and the graduating valve *24* will be moved back to overreduction lap position; that is, until the shoulder of the equalizing-piston stem strikes

against the slide valve *22*. The graduating valve *24* will then cover or blank port *l* and thus close communication between the chambers *Y* and *Z*. Each succeeding reduction, provided it does not produce equalization between chambers *Y* and *Z*, will cause piston *20* to move to overreduction position and, finally, back to overreduction lap position. Also, in this position, the graduating valve *24* blanks the port *v* leading to chamber *K*. Therefore, in case the brake is held applied in overreduction position for a sufficient length of time and the leakage from the application chamber is so great that sufficient service-reservoir air cannot leak past the piston-packing ring, from chamber *H* into chamber *G*, to supply it, the service-reservoir charging valve will finally be moved upwards, opening direct connection between the service reservoir and the application chamber through port *g*, chamber *H*, ports *v* and *y*, port *f* in slide valve *22*, and port *l*. Should an overreduction reduce the brake-pipe pressure below the pressure of equalization of chambers *Y* and *Z*, quick-action will result.

Preliminary Release Position.—In releasing brakes, a rise in brake-pipe pressure above the pressure in chambers *D* and *E* will cause the piston *20* to move toward release position. The equalizing piston *20* moves first, because the release piston and valves are designed so that they will require a greater differential pressure to move them than is necessary to move the equalizing piston and valves. When the equalizing slide valve *22* has been moved to preliminary release position, it is held momentarily with port *z* of the slide valve in register with port *y* of the seat. In this position, the pressure chamber *Z* is connected with chamber *F* by port *f*, ports *w* and *i* of the slide valve, and port *i* of the seat. Chamber-*Z* pressure in chamber *F* and the force of the equalizing-piston stop-spring *30* insure the slide valve *22* sufficient time in the preliminary release position to reduce chamber-*E* pressure below that in the brake pipe by an amount that makes positive the return of piston *3* to release position. Chamber-*E* air exhausts through port *y*, port *z* of the slide valve, cavity *dw* of the graduating valve, and port *w* of the slide valve, to the reduction-limiting-chamber exhaust *w*.

Secondary Release Position.—The reduction of chamber-*E* pressure results in the release piston moving to release position

while the equalizing piston still momentarily remains in position with port *z* of the slide valve in register with port *y* of the seat. This position is called the secondary release position. With piston *3* in release position, chamber *F* is connected with the emergency-piston exhaust port *Ex* by port *i* and cavity *i* of the release slide valve. At the same time, the pressure chamber *Z* is connected to the same port *i* and chamber *F* by the port *f*, ports *f* and *i* in the slide valve *22*, and port *i*. The exhaust of chamber-*Z* air through port *i* tends to maintain the pressure in chamber *F* temporarily while slide valve *4* is increasing the port opening from chamber *F* to the atmosphere to insure the exhaust from chamber *E* being held open until after the release piston is in release position. As the movement of the release slide valve toward release position increases the size of the opening of port *i*, the pressure in chamber *F* gradually decreases until it is low enough for the differential pressure acting on the piston *20* to start the piston toward release position. This movement of the slide valve *22* gradually restricts and, finally, closes port *f*, thereby stopping the flow of chamber-*Z* air into port *i* and chamber *F*. Chamber-*F* air then exhausts to the atmosphere, and the equalizing piston is moved to release position and held there. When the slide valve *4* assumes release position, and before the slide valve *22* moves to release position, a second passage is made for the exhaust of chamber-*E* air to the atmosphere.

In the release position of slide valve *4*, port *e* of the slide valve registers with port *e* of the valve seat; therefore, chamber-*E* air can pass through the ports *e*, the cavity *w* of the slide valve, and the reduction-limiting-chamber exhaust *w*. This connection, like the connection between ports *z* and *y*, is but momentary and is simply a second, or additional, opening from chamber *E* to the atmosphere. It should be understood that a brake-pipe pressure of from 1½ to 2 lb. above that in the application chamber *X* is all that is necessary to move the parts through the momentary successive positions of preliminary and secondary release to release position.

With release slide valve *4* in release position, chamber-*C* and application-chamber air exhaust to the atmosphere through the port *l*, ports *l* and *l'* in slide valve *22*, and port *l'* in the

seat, to the application-chamber exhaust. As chamber-*C* pressure reduces, chamber-*O* pressure forces piston *78* forwards to release position and exhausts the service-brake-cylinder air through port *n*, chamber *O*, port *k*, and the service-cylinder exhaust. The pressure in chamber *M* exhausts through the ports *em* and *en* into port *n* and thence to the atmosphere.

Graduated-Release Position.—With both piston *20* and piston *3* in release position, the control valve is said to be in graduated-release position, when the direct- and graduated-release cap *18* is turned, so as to cut in the graduated-release feature. If the cap *18* is turned into the position for direct release, the control valve is said to be in direct-release position. In both cases, the control valve is in release position, but the term *graduated* or *direct* is prefixed to show whether the cap *18* is turned so as to give a graduated or a direct release of the brake.

The application chamber and chamber *C* are open to the atmosphere through ports *l* and *l'* and the application-chamber exhausts. If it were not for the graduated-release feature, the release would be complete. However, the emergency reservoir is connected with chamber *E* through port *c*, ports *c* and *e* of the slide valve *22*, port *e*, through the cap *18*, port *e*, and port *e* of the slide valve *3*, into chamber *E*. Before this connection was made, the chamber-*E* pressure was reduced with the pressure-chamber pressure when the brake application was made. The emergency reservoir, on the other hand, is charged to normal brake-pipe pressure. Therefore, air from the reservoir will flow into chamber *E*, thence through port *y*, ports *y* and *f* of slide valve *22*, and port *f* of the seat, to the pressure chamber *Z*. This pressure tends to increase the pressure in chambers *E* and *Z* at the same time that brake-pipe air is increasing chamber-*B* pressure. If chamber-*E* pressure rises faster than chamber-*B* pressure, the differential pressure thus created on piston *3* will tend to move the piston toward the graduated-release lap position, and either wholly or partly stop the flow of air from the application chamber to the atmosphere and from the emergency reservoir to chamber *E*. If brake-pipe pressure increases very slowly, the increase in differential pressure may be sufficiently rapid to cause the release piston and graduating valve to

graduate the release. If the rise in brake-pipe pressure is not slow enough to produce this action, the movement of piston *3* toward graduated-release lap position will be sufficient to restrict the flow of air from the emergency reservoir into chamber *E* to an extent sufficient to adjust the rate of rise of pressure in chamber *E* equal to the rate of rise of brake-pipe pressure in chamber *B*. In this case, the release of air from the application chamber and chamber *C* will be correspondingly prolonged.

Whether the brake will be released completely or be graduated off depends on whether chamber-*C* pressure is exhausted completely at one time or is exhausted by degrees, the pressure being partly exhausted and then held stationary for a time, this operation being repeated several times. The pressure in the reduction-limiting chamber and in chamber *S* below the emergency slide valve is completely exhausted when a release is made, regardless of whether the release is graduated or direct. Chamber *E* (and the pressure chamber) is connected to chamber *K* through the port *y*, ports *y* and *x* of slide valve *22*, and port *x* in the valve seat, and emergency-reservoir air can pass to chamber *G* through port *c*, ports *c* and *v* of slide valve *22*, and port *v* when slide valve *22* is moved to release position. Whether the service-reservoir charging valve will be operated and thus permit the service reservoir to be recharged will depend on the relative pressures in chambers *G* and *K* and the service reservoir. With the ordinary manipulation of the brake, the service-reservoir charging valve will not be operated, so that no air will pass from the emergency reservoir into the service reservoir; the pressure chamber, however, will be recharged with emergency-reservoir air to within 5 lb. of the pressure in the emergency reservoir. The service-reservoir charging valve then opens and forms connection between the emergency reservoir and the service reservoir through chamber *H*, and the service and emergency reservoirs and the pressure chamber *Z* are all recharged to normal pressure by air from the brake pipe.

In other words, in recharging the brake, first, the pressure chamber alone is recharged to within 5 lb. of emergency-reservoir pressure by air from the emergency reservoir, during which time the brake pipe alone is being recharged from the

main-reservoir air supply through the brake valve. Connection is then made between the service reservoir, the emergency reservoir, the pressure chamber, and the brake pipe, and the final stage of the recharging of all these parts is accomplished by air from the main reservoir passing through the brake valve.

As main-reservoir air has the brake pipe alone to recharge during the first stage of the recharge, the rise in brake-pipe pressure is much more rapid than with the older types of brakes; hence, the release of the brakes throughout the length of the train is much more sure and positive than with the other types.

Release Lap Position.—The release of the brake is accomplished by placing the brake valve in release position so as to raise brake-pipe pressure, recharge the brake pipe, and move the pistons *20* and *3* to release position. If the handle of the brake valve is left in release position, the brake will release in one continuous exhaust of brake-cylinder air without any graduations of brake-cylinder pressure. On the other hand, if the brake valve is moved to release position for a time and is then moved to lap, only part of the brake-cylinder pressure will be exhausted, and by repeating the movement of the brake valve from release to lap positions the brake can be graduated off. In graduating off the brake, while the brake pipe is recharging through the brake valve, the pressure chamber and chamber *E* are recharging with air from the emergency reservoir. If, the brake-valve handle is moved to lap position when the brake pipe is only partly recharged, the continued flow of air from the emergency reservoir with chamber *E* will raise the pressure in chamber *E* above that in chamber *B*, which is now stationary, and cause the release piston *3* to move to graduated-release lap position. In this position, the shoulder of the stem of piston *3* is against the slide valve *4*, the flow of air into chamber *E* ceases, and the graduating valve blanks port *l* and stops the exhaust of air from chamber *C* and the application chamber. This holds chamber-*C* pressure constant, and the application portion maintains brake-cylinder pressure constant and equal to chamber-*C* pressure. If the brake valve is again moved to release position and then back to lap position, piston *3* will be moved to release position and then back to release lap position,

and this action will be repeated. The gradual release of the brake can be continued until the emergency reservoir and the pressure chamber equalize at a pressure about 5 lb. below normal brake-pipe pressure.

Release Position—*Charging Pressure Chamber and Emergency and Service Reservoirs.*—The recharging of the pressure chamber to within 5 lb. of brake-pipe pressure is accomplished with emergency-reservoir air. By the time this is accomplished the service-brake cylinder is entirely released, and the final stage of recharging the pressure chamber and the emergency and service reservoirs is accomplished by the use of air from the brake pipe.

Direct-Release and Charging Position.—The direct-release position is the same as the graduated-release position, except that the direct and graduated-release cap *18* is turned to the position for the direct release of the brake. With cap *18* in this position, the brake cannot be graduated off.

Changing the position of cap *18* cuts off the connection between the emergency reservoir and the application chamber and chamber *E*. During direct release, therefore, the chambers *E* and *Z* are recharged from the brake pipe through the feed-groove *s'* past the piston *3*. There is direct connection between chambers *E* and *Z* through port *y*, ports *y* and *f* of slide valve *22*, and port *f* of the valve seat. As chamber *E* charges from chamber *B*, chamber-*E* pressure cannot increase above chamber-*B* pressure; therefore, piston *3* cannot be moved to graduated lap position and the brake cannot be graduated off.

The chambers *C* and *X* are open to the atmosphere through port *l*, ports *l* and *q* of slide valve *4*, port *q*, cap *18*, port *l'*, and the application-chamber exhaust. This affords an exhaust outlet for chamber *X*, which cannot be closed as long as the release slide valve *4* remains in release position. A second path from the application chamber to the exhaust leads through port *l*, port *l* in slide valve *4*, cavity *dw* in the graduating valve *6*, ports *l'* in the slide valve and seat, and the application-chamber exhaust. It is possible, however, for this path to be partly restricted or, perhaps, entirely closed by the piston *3* moving the graduating valve *6* so as to close port *l* in the slide valve *4*

partly or wholly. The first path, however, insures direct connection to the atmosphere.

There are two outlets from the application chamber to the exhaust in direct-release position, while there is only one outlet when cap *18* is turned so as to give graduated release. The capacity of the release port, therefore, is greater for direct release than for graduated release, and thus gives a more rapid release with the direct-release adjustment, which is desirable.

Quick-Action Valve Venting.—Either a brake-pipe reduction that is too fast or a reduction so heavy that it reduces brake-pipe pressure below the pressure of equalization of the pressure chamber and the reduction-limiting chambers will produce a differential pressure on pistons *3* and *20* that will move them to their emergency positions.

With the slide valve *4* in emergency position, emergency-reservoir air passes through port *c* direct into chamber *E*, thence through port *r* to the space below the quick-action closing valve *139*. Chamber *T*, above valve *139*, is connected by port *s* with port *o* and the emergency-brake cylinder, which is connected to the atmosphere through port *o*, the cavity in the emergency slide valve, port *o'*, and the emergency-cylinder exhaust; consequently, the quick-action closing valve *139* is raised from its seat and emergency-reservoir air flows into the chamber *W* above the quick-action piston *131*. This forces down piston *131* and opens the quick-action valve *133* against the brake-pipe pressure in the chamber *V* that vents brake-pipe air to the atmosphere through chamber *V*, port *qx*, and the quick-action exhaust, thereby producing a local drop in brake-pipe pressure that transmits the quick-action serially throughout the train.

Air from the emergency reservoir, after flowing to chamber *E*, passes through port *l* direct to chamber *C* and the application chamber. This forces piston *78* back into application position, which closes the exhaust ports *k* and opens the application-valve port wide, thus allowing the service reservoir and the service-brake cylinder to equalize through port *g*, chambers *N* and *O*, and port *n*.

The movement of the slide valve *4* to emergency position also opens the chamber *P* above the large emergency piston

108 to the atmosphere through port *p* and cavity *i* in slide valve *4*. Emergency-reservoir pressure in chamber *R* forces the emergency piston *108* and the slide valve *110* to their emergency positions, thereby connecting the emergency-brake cylinder with the emergency reservoir through port *c*, chamber *R*, and port *o* and allowing the pressure to equalize in the cylinder and reservoir; also, chamber *R* is connected to the service cylinder through port *en* and port *n*, thus allowing all the service- and emergency-brake cylinders and reservoirs to equalize with one another.

Chamber *M*, behind piston *78*, is connected to the atmosphere through ports *em*, the cavity in the emergency slide valve, port *o'*, and the emergency-cylinder exhaust. This is done to assist the pressure in chamber *C* moving the piston *78* quickly and positively to emergency position. It will be noted that in emergency position the pressure chamber *Z* is connected to chambers *D* and *E*, and chamber *D* is connected to chamber *Y*. The purpose of this is to equalize the pressure in all the chambers and reservoirs and to insure sufficient pressure on all the slide valves and graduating valves to hold them to their seats.

Quick-Action Valve Closed.—The closing of the quick-action valve *133*, after making a local vent to the atmosphere to transmit quick action serially throughout the train, is accomplished as follows: As soon as quick action occurs, emergency-cylinder pressure and, therefore, chamber-*T* pressure, begins to rise, while the pressure in chamber *W* and the emergency reservoir begins to fall. When the pressures in chambers *T* and *W* become nearly equal, the spring of valve *139* closes the valve and stops the flow of air into chamber *W*. The air thus trapped in chamber *W* escapes through the leakage hole *lh* in the piston *131* to the atmosphere through port *qx* and the quick-action exhaust. This balances the pressure on the two faces of piston *131*, and the spring of valve *133* and brake-pipe pressure closes the valve *133* and stops the escape of brake-pipe air to the atmosphere. If the brake-pipe pressure is entirely depleted, the spring of valve *133* will close the valve and thus insure against a loss of brake-pipe air when a release is made immediately after the quick-action application.

LUBRICATING THE CONTROL VALVE

Equalizing Portion.—The equalizing portions of the control valve should be lubricated with a high grade of dry graphite (not flake graphite) of the highest obtainable fineness and purity. Oil should not be used for this purpose. A free use of oil should be made in "rubbing in" the bearing surfaces of the equalizing portion, but all oil, gum, or grease should be thoroughly removed from the slide valves and seats before lubricating them, as follows: Rub graphite on the face of the slide valves and their seats, on the face of the graduating valves and their seats, and on the upper portions of the bushings where the slide-valve springs bear. The graphite should be applied in such a way as to fill in the pores of the brass and leave a very thin, light coating on the seats. After lubricating the parts, care should be taken not to touch them with the hands, as moisture tends to remove the thin coating of graphite and thus destroy the lubrication.

The graphite is best applied with a stick about 8 in. long, to one end of which is glued a small pad of chamois skin. The skin on the end of the stick is dipped in the graphite, and the graphite is rubbed on the surfaces to be lubricated. A few light blows of the chamois on the valve seats will leave sufficient loose graphite on them.

After the pistons and slide valves are replaced in the equalizing portion, they should be moved to release position so that a little oil may be rubbed on the piston bushings; the pistons should then be moved back and forth several times to make sure that the oil is evenly distributed on the bushing. Only a thin coating of oil should be used, and it should be well rubbed in so that there will be no free oil left on the parts after they have been oiled.

Application Portion.—The application valve and seat and the exhaust valve and seat of the application portion of the control valve should be cleaned; then they should be rubbed in with oil, which should be thoroughly removed; and finally, they should be lubricated with graphite in the same manner as the slide valve and seats of the equalizing portion. During the time that the piston is removed, the cylinder should be

cleaned and the walls lightly lubricated with a good grade of valve oil. Clean the piston and piston ring and lubricate the ring and packing leather with a little good valve oil.

Emergency Portion.—To lubricate the emergency portion of the control valve, remove the parts and thoroughly clean the bearing surfaces; rub in the parts, using oil for the purpose, and thoroughly clean off all oil and grease; then lubricate the bearing surfaces with graphite. Remove the top cover and take out the loose-fitting cylinder bushing; lubricate the large piston with a few drops of a good grade of triple-valve oil and apply the slide valve to the portion; lubricate the stop-bushing for the small emergency bushing, applying a few drops of oil to its inner surface; then replace the bushing and bolt on the top cover. Move the slide valve to release position and apply a few drops of good triple-valve oil to the walls of the large cylinder bushing, and then move the piston back and forth several times to distribute the oil properly.

Quick-Action Portion.—Only the quick-action closing-valve piston *131* and the cylinder bushing of the quick-action portion require lubrication. Just a few drops of oil are sufficient; the piston, however, should be worked back and forth several times to distribute the oil properly.

BRAKE CYLINDERS

TYPE B DRIVER-BRAKE CYLINDERS

In ordering type B brake cylinders, Fig. 1, or repair parts, specify the proper piece number and name. The driver-brake cylinders are furnished with outer and side flanges full unless the order specifies to the contrary. Either outer or side flanges will be removed when so specified on orders, in which case complete directions, with print showing exact dimensions desired, should accompany order.

Ref. No.	*Name of Part*
2	Cylinder body.
3	Piston and rod, includes 13 only
4	Non-pressure head.
5	Pressure head.
6	Release spring.

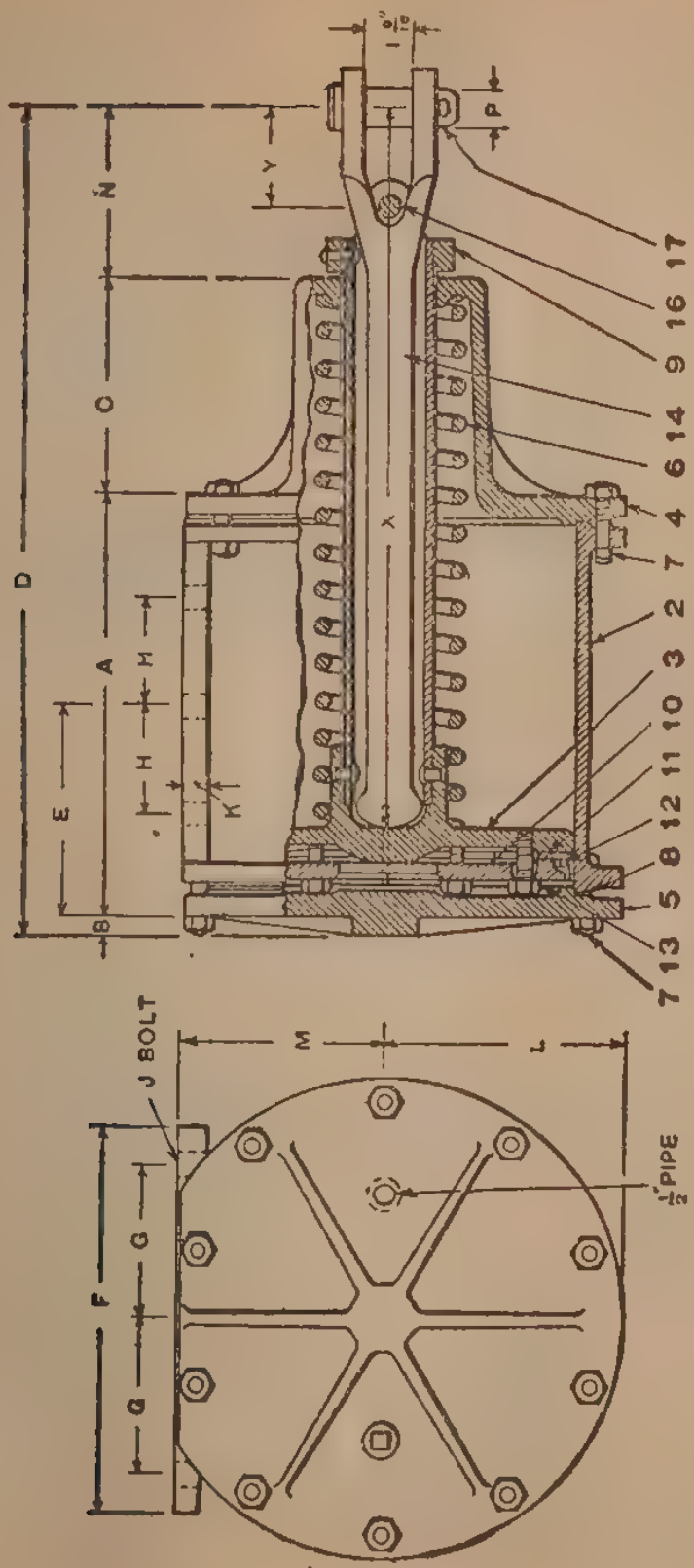
D
E
B
A
H
H
K
N
O
X
Y
P
17
16
9
14
6
4
7
2
3
10
11
12
8
5
13
7
J BOLT
F
G
G
M
L
1/2" PIPE

FIG. 1

PIECE NUMBERS OF TYPE B DRIVER-BRAKE CYLINDERS

Cylinders			Piece No. of Cyl. Complete	Cylinders			Piece No. of Cyl. Complete
Dia. In.	Stroke In.	Type No.		Dia. In.	Stroke In.	Type No.	
6	8	48-B	8,618	12	8	13-B	7,318
8	6	33-B	1,148	12	10	15-B	7,339
8	7	11-B	1,134	12	12	39-B	7,378
8	12	43-B	6,236	14	10	21-B	7,203
10	6	51-B	9,687	14	12	42-B	7,260
10	8	55-B	1,115	16	10	101-B	22,038
10	10	35-B	1,120	16	12	47-B	7,447
10	12	99-B	1,101				

Ref. No.	*Name of Part*
7	Cylinder-head bolt and nut.
8	Cylinder gasket.
9	Push-rod holder.
10	Follower.
11	Packing leather.
12	Packing expander.
13	Follower stud and nut.
14	Push-rod with pin and cotter.
15	Oil plug.
16	Push-rod holder pin with cotter.
17	Push-rod pin, with cotter.

TYPE C DRIVER-BRAKE CYLINDERS

The piece numbers of the type C driver-brake cylinders, complete, shown in Fig. 2, are as follows:

PIECE NUMBERS OF TYPE C DRIVER-BRAKE CYLINDERS

Cylinders			Piece No. of Cyl. Complete	Cylinders			Piece No. of Cyl. Complete
Dia. In.	Stroke In.	Type No.		Dia. In.	Stroke In.	Type No.	
8	6	33-C	1,207	12	8	13-C	1,169
8	7	11-C	4,847	12	10	15-C	1,175
10	6	30-C	1,192	12	12	39-C	1,179
10	8	55-C	1,198	14	10	21-C	1,258
10	10	35-C	1,184	14	12	42-C	1,265
10	12	99-C	1,204				

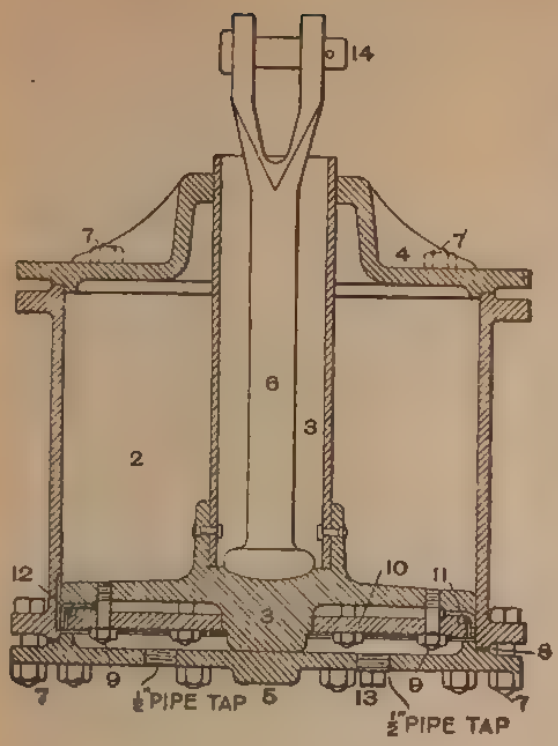

FIG. 2

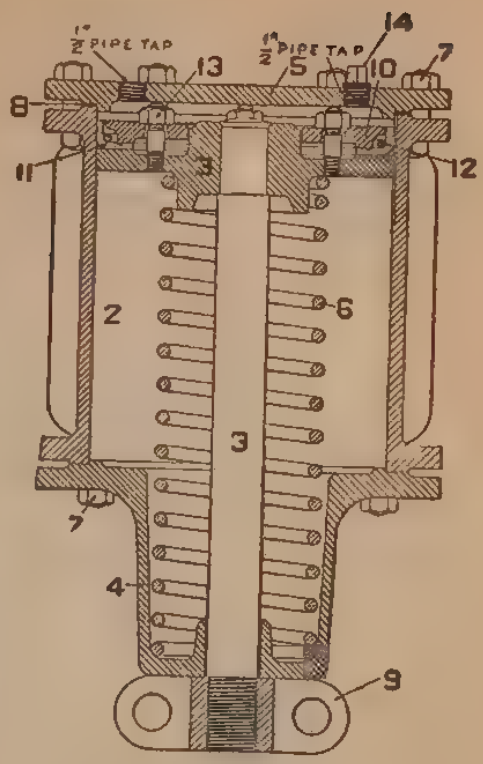

FIG. 3

The reference numbers of the various parts are as follows:

Ref. No.	*Name of Part*
2	Cylinder body.
3	Piston and rod, includes 9 only.
4	Non-pressure head.
5	Pressure head.
6	Push rod, with pin and cotter.
7	Cylinder-head bolt and nut.
8	Cylinder gasket.
9	Follower stud and nut.
10	Follower.
11	Packing leather.
12	Packing expander.
13	Oil plug.
14	Push-rod pin, with cotter.

PUSH-DOWN TYPE DRIVER-BRAKE CYLINDERS

The piece numbers of the push-down type of driver-brake cylinders, complete, shown in Fig. 3, are as follows:

PIECE NUMBERS OF PUSH-DOWN TYPE DRIVER-BRAKE CYLINDERS

Cylinders			Piece No. of Cyl. Complete	Cylinders			Piece No. of Cyl. Complete
Dia. In.	Stroke In.	Type No.		Dia. In.	Stroke In.	Type No.	
6	6	66	2,529	10	12	99	1,345
6	8	48	1,972	12	8	13	1,319
8	6	33	1,358	12	10	15	1,325
8	7	11	1,311	12	12	39	1,329
10	6	30	1,333	14	10		1,354
10	8	55	1,339	14	12	42	1,348
10	10	35	1,342				

The reference numbers of the various parts are as follows:

Ref. No.	*Name of Part*
2	Cylinder body.
3	Piston and rod, includes 13 only.
4	Non-pressure head.
5	Pressure head.
6	Release spring.
7	Cylinder-head bolt and nut.
8	Cylinder gasket.
9	Crosshead.
10	Follower.
11	Packing leather.
12	Packing expander.
13	Follower stud and nut.
14	Oil plug.

PISTON-ROD CROSSHEADS FOR DRIVER-BRAKE CYLINDERS

In Fig. 4 are shown the cross-sections and plans and the piece numbers of the piston-rod crossheads that may be used with driver-brake cylinders.

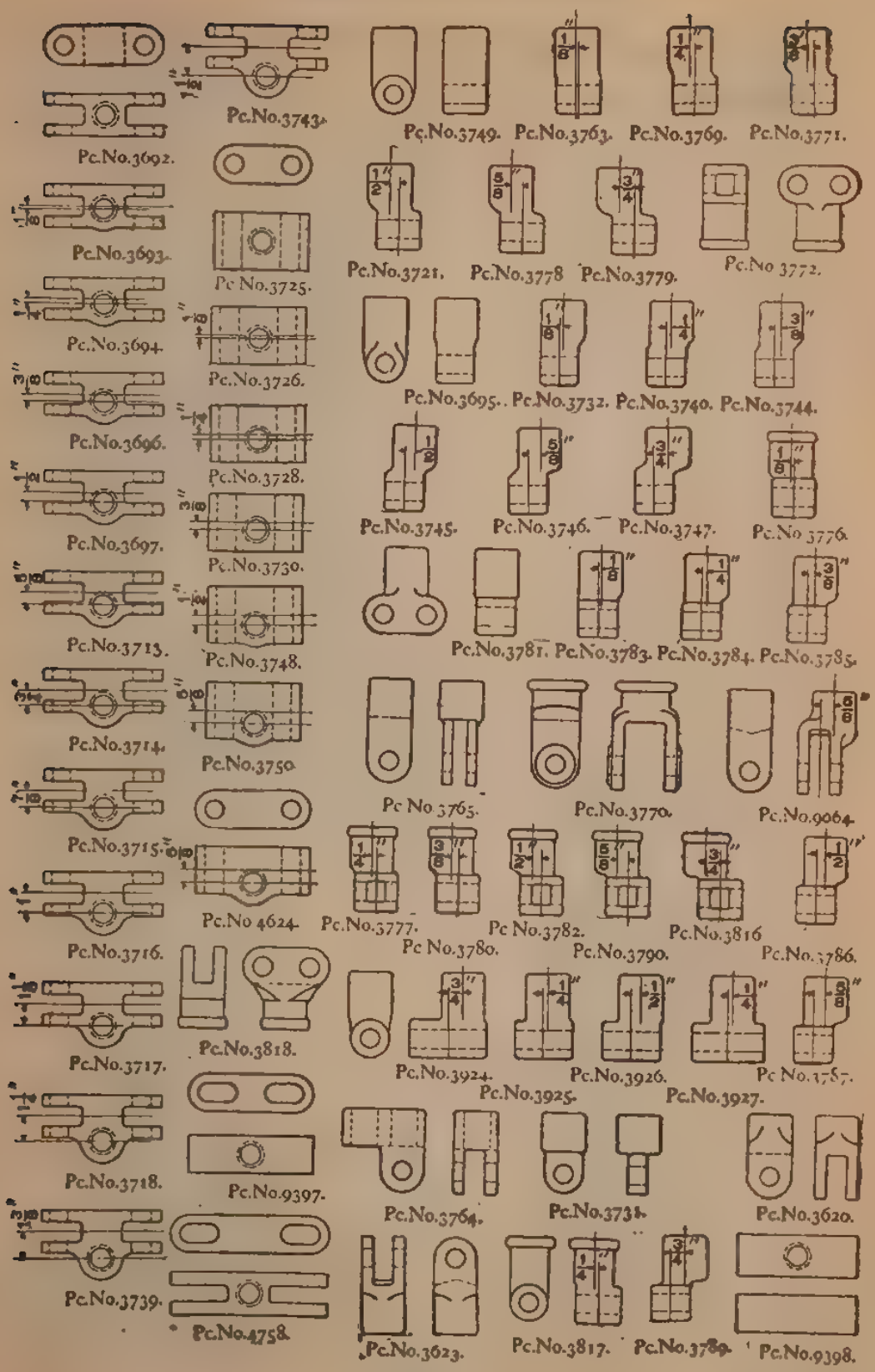
Pc.No.3743.
Pc.No.3692.
Pc.No.3749.
Pc.No.3763.
Pc.No.3769.
Pc.No.3771.
Pc.No.3693.
Pc No.3725.
Pc.No.3721.
Pc.No.3778
Pc.No.3779.
Pc.No 3772.
Pc.No.3694.
Pc.No.3726.
Pc.No.3695.
Pc.No.3732.
Pc.No.3740.
Pc.No.3744.
Pc.No.3696.
Pc.No.3728.
Pc.No.3745.
Pc.No.3746.
Pc.No.3747.
Pc.No 3776.
Pc.No.3697.
Pc.No.3730.
Pc.No.3713.
Pc.No.3748.
Pc.No.3781.
Pc.No.3783.
Pc.No.3784.
Pc.No.3785.
Pc.No.3714.
Pc.No.3750
Pc No 3765.
Pc.No.3770.
Pc.No.9064.
Pc.No.3715.
Pc.No 4624
Pc.No.3777.
Pc No.3782.
Pc.No.3816
Pc.No.3716.
Pc No.3780.
Pc.No.3790.
Pc.No.3786.
Pc.No.3717.
Pc.No.3818.
Pc.No.3924.
Pc.No.3926.
Pc No.3787.
Pc.No.3925.
Pc.No.3927.
Pc.No.3718.
Pc.No.9397.
Pc.No.3764.
Pc.No.3734.
Pc.No.3620.
Pc.No.3739.
Pc.No.4758.
Pc.No.3623.
Pc.No.3817.
Pc.No.3789.
Pc.No.9398.

FIG. 4

ENGINE-TRUCK BRAKE CYLINDERS

A cross-section of the engine-truck brake cylinders is shown in Fig. 1; the piece numbers of these cylinders are as follows:

PIECE NUMBERS OF TYPE D ENGINE-TRUCK BRAKE CYLINDERS

Cylinders			Piece No. of Cylinder Complete
Diam. In.	Stroke. In.	Type No.	
6	8	48-D	9,729
8	7	11-D	40,815
8	12	43-D	1,964
10	8	55-D	40,825
10	10	35-D	40,827
10	12	99-D	40,829
12	8	13-D	7,551
12	12	39-D	40,831

The reference numbers of the various parts are as follows:

Ref. No.	*Name of Part*
2	Cylinder body.
3	Piston and rod, includes 13 only.
4	Pressure head, with lever bracket.
5	Non-pressure head.
6	Release spring.
7	Cylinder-head bolt and nut.
8	Cylinder gasket.
9	Push-rod holder.
10	Follower.
11	Packing leather.
12	Packing expander.
13	Follower stud and nut.
14	Push rod, complete, includes 17.
15	Oil plug.
16	Push-rod holder pin, with cotter.
17	Push-rod pin, with cotter.
18	Detachable lever bracket.
19	Lever-bracket bolt and nuts.

Cylinders are not provided with bosses tapped for slack-adjuster connections unless so specified on orders. Should orders including truck brake cylinders or cylinder heads also cover slack adjusters, detachable brackets will be omitted, and cylinders arranged for attachment of slack adjusters.

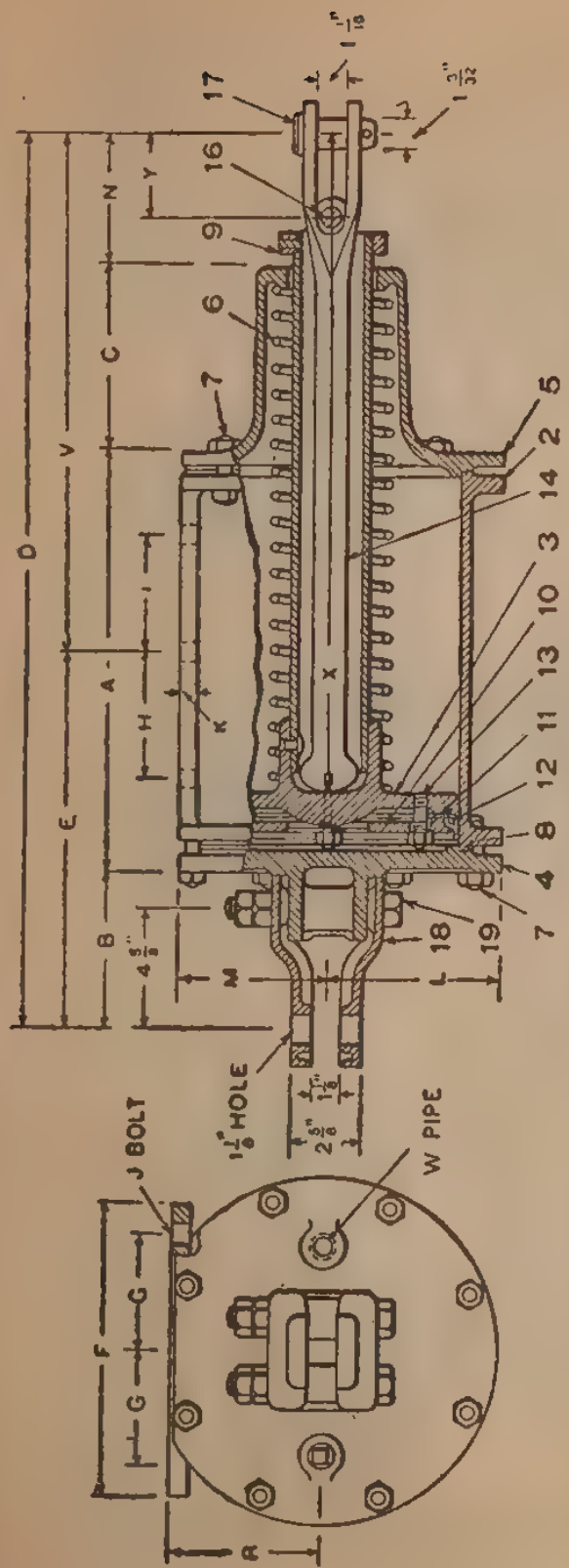

FIG. 1

TENDER-BRAKE CYLINDERS

TYPE K AND TYPE L CYLINDERS

Type K and type L tender-brake cylinders, Figs. 1 and 2, are provided with detachable fulcrum and seat for type P or type H triple valve. They are not arranged for slack-adjuster connection, or for combined automatic and straight air, unless so specified on orders.

All tender-brake-cylinder pressure heads with connection for quick-action triple valve are furnished as in Fig. 3 (*h*), except that for ordinary equipments port *c* is not tapped, and bosses *A* and *B* not drilled. When ordering such pressure heads for the combined automatic and straight-air brake equipment, schedule SWA-SWB, specify port *c* to be tapped for ¾-in. pipe and plugged, plug to be flush on cylinder side of head; also that either of bosses *A* or *B* should

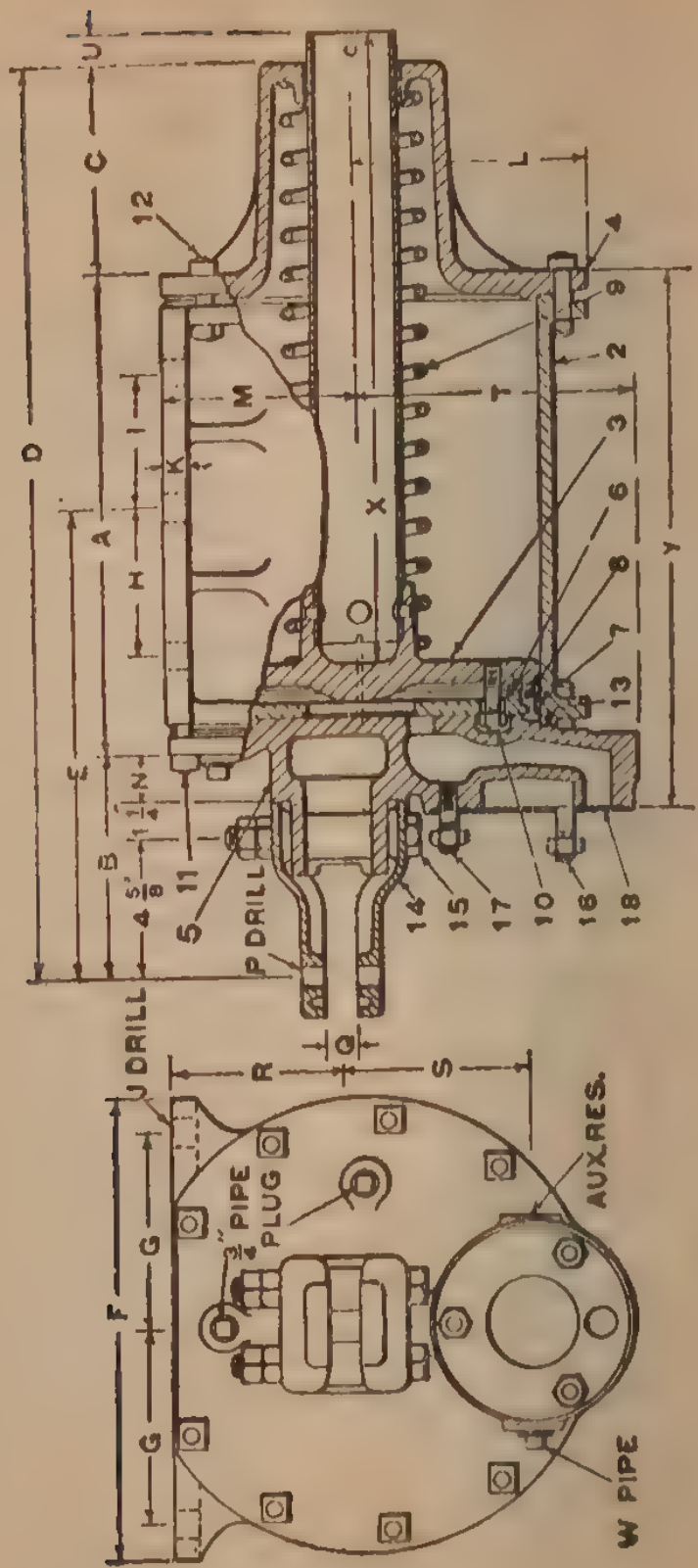

FIG. 2

be drilled and tapped for ½-in. pipe. The types *K* and *L* brake cylinders are not arranged for slack adjuster connection, or the type K cylinder for the combined auto-

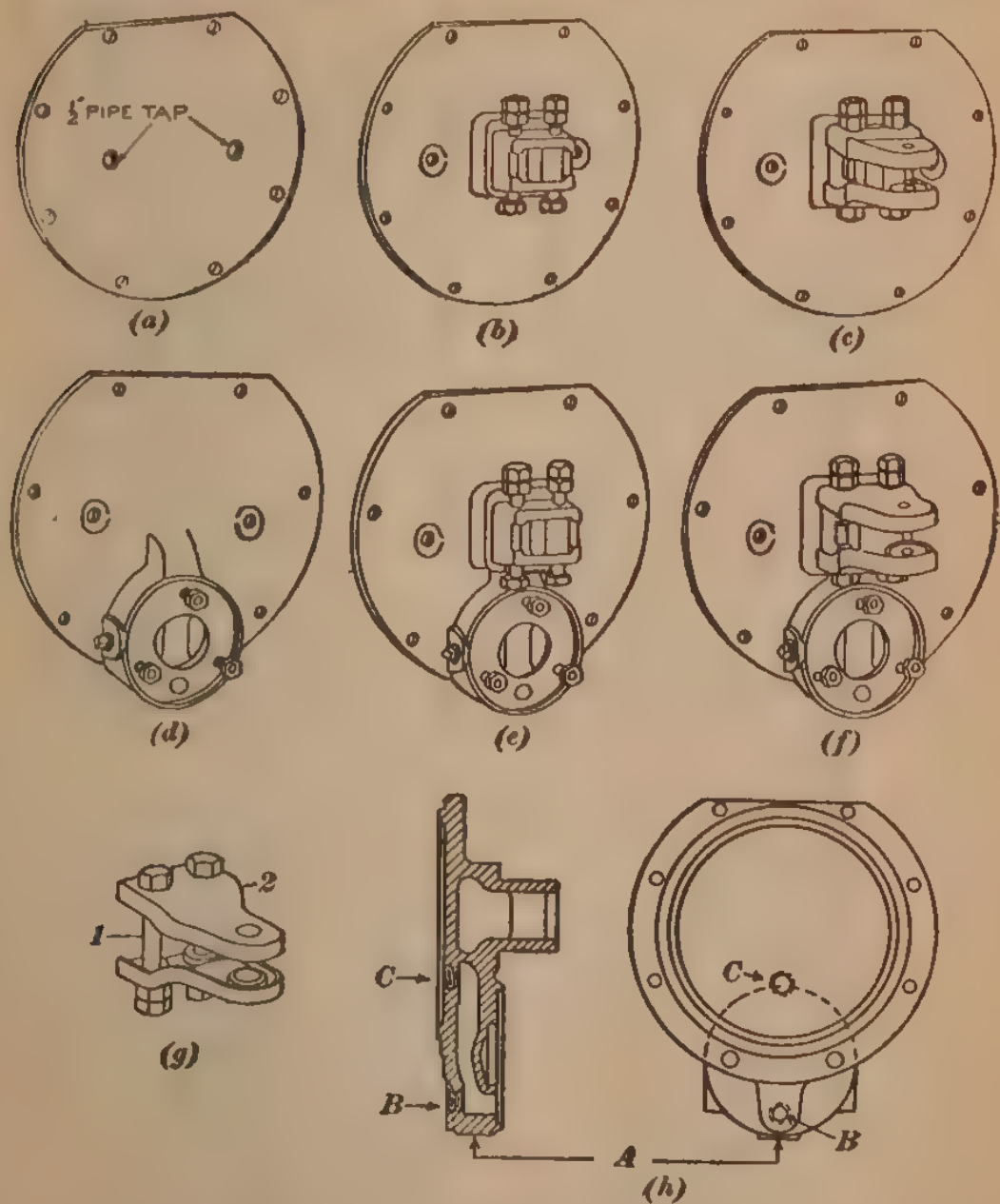

FIG. 3

matic and straight air, unless so specified on orders. Slack adjusters are not recommended for use with the No. 6 E T equipment.

The piece numbers are given in the accompanying tables.

PIECE NUMBERS OF TYPE K TENDER-BRAKE CYLINDERS

Kind of Cylinder	Size of Cylinder				
	8″×12″	10″×12″	12″×12″	14″×12″	16″×12″
	Piece Number				
Type K tender-brake cylinder, complete..	12,990	12,992	12,994	12,996	13,182
Type K tender-brake cylinder, for combined automatic and straight air, complete.....	22,158	19,531	19,891	17,922	22,161
Type K tender-brake cylinder, for slack adjuster, complete, less lever bracket..	8,608	8,611	3,628	8,616	24,770
Type K tender-brake cylinder, for slack adjuster with combined automatic and straight air, complete, less lever bracket	22,159	21,279	19,892	20,672	22,160

PIECE AND REFERENCE NUMBERS OF PARTS OF TYPE K TENDER-BRAKE CYLINDERS

Name of Part	Ref. No.	Size of Cylinder				
		8″×12″	10″×12″	12″×12″	14″×12″	16″×12″
		Piece Number of Part				
Cylinder body	2	1,216	18,025	5,197	8,653	13,077
Cylinder body, arranged for slack adjuster, complete	2	5,149	5,177	5,174	8,654	20,635
Piston and rod, includes 10 only	3	1,246	1,251	3,631	5,397	24,819
Non-pressure head	4	1,217	1,104	1,029	1,005	6,369
Pressure head, less bracket	5	58,816	14,635	15,293	14,092	24,767
Pressure head, with bracket	5	58,817	4,761	3,630	8,617	24,766
Pressure head, less bracket, for combined automatic and straight air	5	23,087	10,947	10,948	10,949	24,769
Pressure head, with bracket, for combined automatic and straight air	5	23,086	19,644	19,413	17,923	24,768
Follower	6	1,142	1,108	1,033	1,010	1,076
Packing leather	7	28,710	1,111	1,035	1,014	1,277
Packing expander	8	1,145	1,112	1,036	1,015	1,079
Release spring	9	1,110	1,110	1,090	1,077	1,077
Follower stud and nut	10	2,305	2,305	5,184	5,184	5,184
Pressure-head bolt and nut	11	4,883	4,883	8,733	8,733	8,733
Non-pressure-head bolt and nut	12	4,883	4,883	9,701	8,733	8,733
Cylinder gasket	13	1,147	1,114	1,038	1,023	1,083
Lever bracket	14	1,456	1,456	1,456	4,010	4,010
Lever-bracket bolt and nuts	15	10,819	10,819	10,819	10,819	10,819
Triple-valve bolt and nut	16	9,518	5,185	5,187	5,187	5,187
Triple-valve stud and nut	17			4.887	4,887	4,887
*Triple-valve gasket	18	2,427	2,427	4,760	4,760	4.760

*Listed for convenience only, not included in complete brake cylinder.

PIECE AND REFERENCE NUMBERS OF TYPE L TENDER-BRAKE CYLINDERS

Name of Part	Ref. No.	Size of Cylinder				
		8″×12″	10″×12″	12″×12″	14″×12″	16″×12″
		Piece Number				
Type L tender-brake cylinder, complete		12,989	12,991	12,993	12,995	13,108
Type L tender-brake cylinder, for slack adjuster, complete, less lever bracket		1,472	1,473	5,173	5,399	20,494
Cylinder body	2	1,216	1,250	5,197	5,385	13,077
Cylinder body, arranged for slack adjuster, complete	2	5,149	5,177	5,174	5,394	20,635
Piston and rod, includes 10 only	3	1,246	1,251	3,631	5,397	24,819
Non-pressure head	4	1,217	1,104	1,029	1,005	6,369
Pressure head, less bracket	5	15,470	14,084	14,088	14,091	15,472
Pressure head, with bracket	5	4,775	4,776	4,777	4,942	4,943
Follower	6	1,142	1,108	1,033	1,010	1,076
Packing leather	7	28,710	1,111	1,035	1,014	1,277
Packing expander	8	1,145	1,112	1,036	1,015	1,079
Release spring	9	1,110	1,110	1,090	1,077	1,077
Follower stud and nut	10	2,305	2,305	5,184	5,184	5,184
Pressure-head bolt and nut	11	4,883	4,883	8,733	8,733	8,733
Non-pressure-head bolt and nut	12	4,883	4,883	9,701	8,733	8,733
Cylinder gasket	13	1,147	1,114	1,038	1,023	1,083
Lever bracket	14	1,456	1,456	1,456	4,010	4,010
Lever-bracket bolt and nuts	15	10,819	10,819	10,819	10,819	10,819

PASSENGER-BRAKE CYLINDERS

TYPE M PASSENGER-BRAKE CYLINDER

The type M passenger-brake cylinders, shown in Fig. 1, are used with standard (schedule PM) quick-action passenger-car

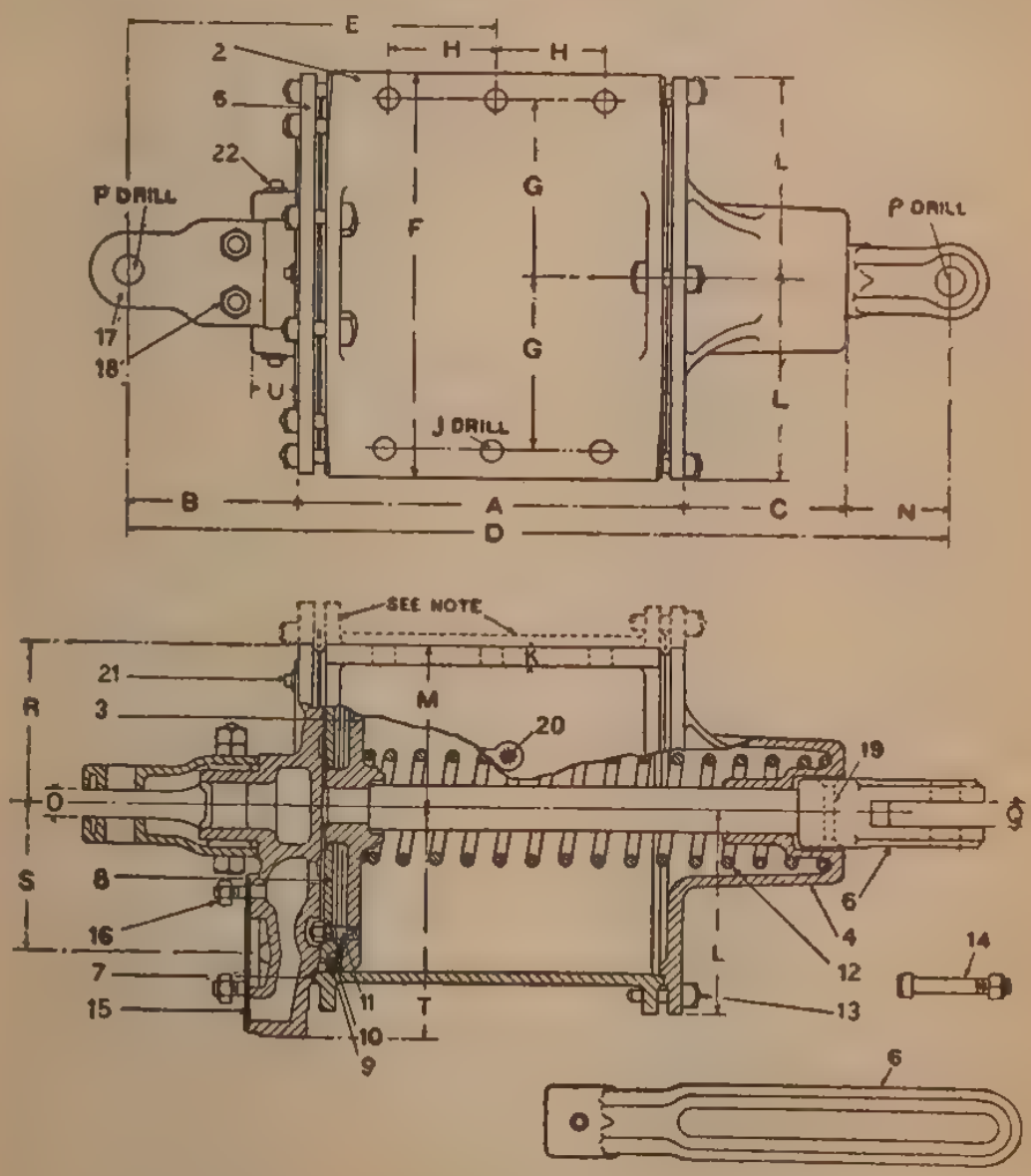

FIG. 1

brake equipments, the seat on the pressure head being suitable for the type P triple valve. These cylinders, however, can be adapted to take the type L triple valve by use of filling blocks.

DIMENSIONS OF TYPE M PASSENGER-BRAKE CYLINDERS

Cylinder Size In.	A In.	B In.	C In.	D In.	E In.	F In.	G In.	H In.	J In.	K In.	L In.	M In.	N bn.	O In.	P In.	Q In.	R In.	S In.	T In.	U In.	Weight Pounds
6×12	15 13/16	7 5/8	5 1/4	33 1/16	15 9/16	9 3/8	3 3/4	4 1/4	11/16	5/8	4 3/8	3 9/16	4 1/4	1 1/4	1 1/4	1 1/8	3 9/16	5 15/16	9 5/16	2 3/16	135
8×12	16 3/16	8 1/8	7 1/16	36 7/16	16 15/16	10 1/8	4 1/4	4 1/2	11/16	5/8	5 3/8	4 9/16	4 3/8	1 1/4	1 1/4	1 1/8	4 1/16	6 1/16	8 7/8	3 3/8	180
10×12	15 11/16	7 5/16	7	34 1/16	15 3/16	11	4 1/16	4	11/16	7/8	6	5 1/16	4 1/16	1 1/4	1 1/4	1 1/8	5 3/16	6 1/16	8 15/16	1 7/8	230
12×12	16 5/16	7 9/16	7	35 3/8	15 3/4	17 1/2	7 1/2	4	15/16	7/8	7	6	4 3/8	1 1/4	1 1/8	1 1/8	5 1/4	6 1/4	9 1/16	2 1/8	330
14×12	16 1/4	7 7/16	7	35 5/16	15 3/4	17 1/2	7 1/2	4 11/16	15/16	7/8	8 1/16	7	4 3/8	1 1/4	1 1/4	1 1/8	7	6 11/32	9 15/16	2	400
16×12	16 11/16	7 9/16	7 5/16	36 1/4	15 15/16	19 1/2	8 3/8	4 3/4	1 1/16	7/8	9 3/4	8 1/8	4 11/16	1 1/4	1 1/4	1 1/4	8 1/8	7 1/2	10 15/16	2 1/8	525

Cylinders of 10 in. diameter or less are flat on top. The cylinders, end flanges and the walls of the body do not extend above the supporting flange. P-1 triple valves are used for cylinders, 6 in.×12 in., 8 in. ×12 in., and 10 in.×12 in.; P-2 triple valves are used for cylinders, 12 in.×12 in., 14 in. ×12 in., and 16 in.×12 in. The dimensions and weights of the cylinders and their piece numbers and the piece and reference numbers of the various parts are given in the accompanying tables.

The slotted crosshead, Ref. No. 6, is used when the hand-brake rigging is designed to work in harmony with the air-brake system, an arrangement that is recommended for all conditions where it is practicable.

Unless otherwise specified, the quick-action triple-valve head with slack-adjuster lug, with a detachable lever bracket is furnished on all orders for or including this part. This bracket can be easily removed to allow the application of the American automatic-slack adjuster, thus obviating the necessity of changing the head. Should orders including cylinders or cylinder heads also cover slack adjusters, detachable brackets are not supplied.

PIECE NUMBERS OF THE TYPE M PASSENGER-BRAKE CYLINDERS

Kind of Cylinder	Size of Cylinder					
	6″×12″	8″×12″	10″×12″	12″×12″	14″×12″	16″×12″
	Piece Number					
Type M passenger-brake cylinder, with plain crosshead, complete	10,149	3,357	1,502	1,506	1,530	1,971
Type M passenger-brake cylinder, with plain crosshead, complete, less lever bracket	10,150	3,629	24,733	24,734	24,735	24,736
Type M passenger-brake cylinder, with slotted crosshead, complete	24,737	24,739	24,741	24,743	24,745	20,305
Type M passenger-brake cylinder, with slotted crosshead, complete, less lever bracket	24,738	24,740	24,742	24,744	24,746	24,747

PIECE AND REFERENCE NUMBERS OF TYPE M PASSENGER-BRAKE CYLINDERS

Name of Part	Ref. No.	P-1 Triple Valve			P-2 Triple Valve		
		Size of Cylinder					
		6″×12″	8″×12″	10″×12″	12″×12″	14″×12″	16″×12″
		Piece Number of Part					
Cylinder body, complete	2	5,872	15,039	5,177	5,178	5,180	5,158
Piston and rod, includes 11 only	3	5,875	3,614	1,503	1,507	1,531	1,282
Non-pressure head	4	5,838	3,325	1,499	1,512	1,535	1,271
Pressure head, less bracket, includes 14, 16, and 18	5	14,634	14,611	14,635	4,785	4,786	14,603
Pressure head, with bracket, includes 14, 16, 17, and 18	5	10,151	3,613	4,761	4,762	4,763	4,789
Plain crosshead	6	1,501	1,501	1,501	5,647	8,659	11,552
Slotted crosshead	6	13,174	13,174	13,174	13,175	10,574	10,575
Cylinder gasket	7	1,243	1,147	1,114	1,038	1,023	1,083
Follower	8	1,238	1,142	1,108	1.033	1,010	1,276
Packing leather	9	28.709	28 710	28,711	28,712	28,713	28,714
Packing expander	10	1,241	1,145	1,112	1,036	1,015	1,079
Follower stud and nut	11	27.345	2,305	2,305	5,184	5,184	5,189
Release spring	12	5,877	1,110	1,110	1,090	1,077	1,275
Cylinder-head bolt and nut	13	4,883	4,883	4,883	8,733	8,733	8,733
Triple-valve bolt and nut	14	9,518	9,518	5,185	5,187	5,187	5,187
Triple-valve gasket	15	2,427	2,427	2,427	4,760	4,760	4,760
Triple-valve stud and nut	16				4,887	4,887	4,887
Lever bracket	17	1,456	1,456	1,456	1,456	4,010	4,010
Lever-bracket bolt and nuts	18	10,819	10,819	10,819	10,819	10,819	10,819
Crosshead rivet	19	1,285	1,285	1,285	1,284	1,284	1,280
¼-in pipe plug	20	1,635	1,635	1,635	1,635	1,635	1,635
⅜-in pipe plug	21	1,004	1,004	1,004	1,004	1,004	1,004
Auxiliary-reservoir plug ½ in. or ¾ in.	22	1,004	1,004	2,202	2,202	2,202	2,202

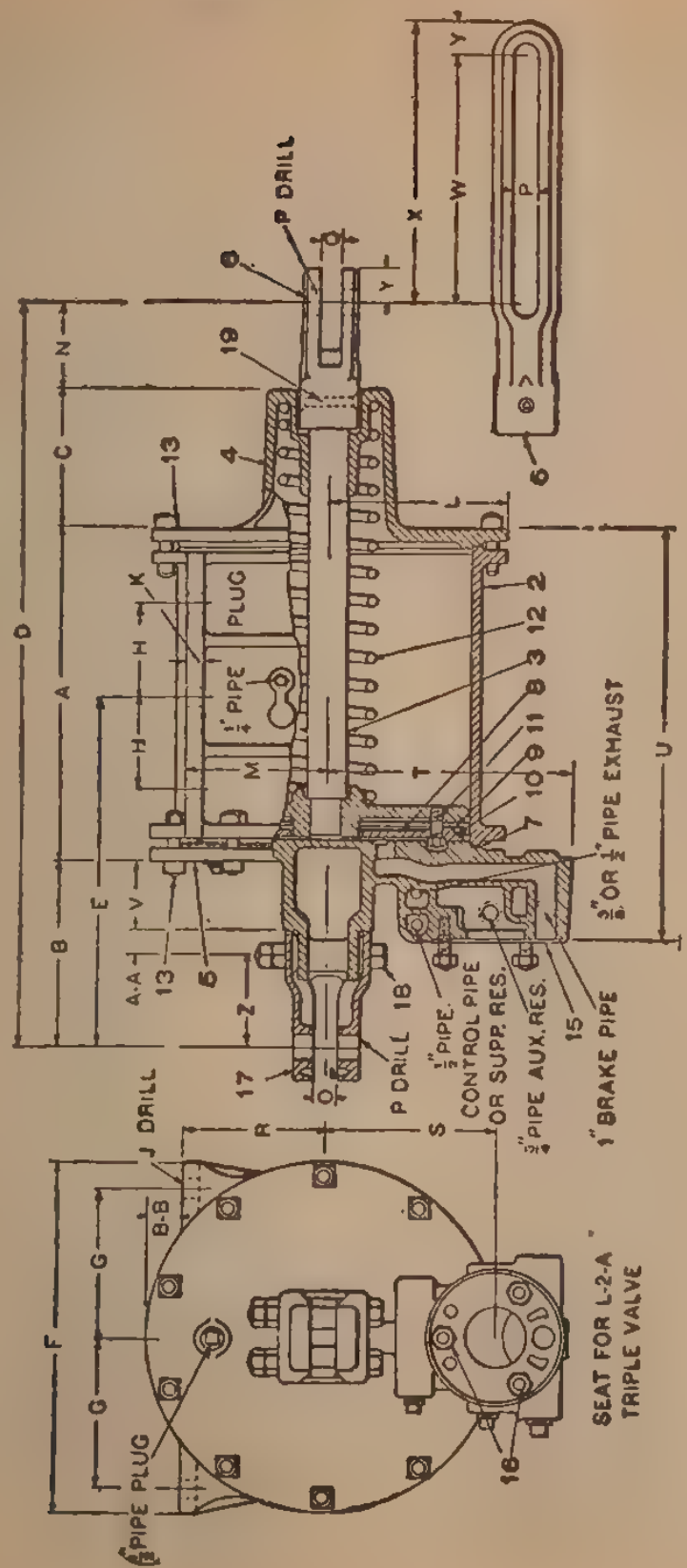
P DRILL
PLUG
1" PIPE
1" PIPE EXHAUST
3/8" OR 1/2"
1" BRAKE PIPE
1/2" PIPE AUX. RES.
1/2" PIPE CONTROL PIPE OR SUPP. RES.
P DRILL
J DRILL
1/2" PIPE PLUG
SEAT FOR L-2-A TRIPLE VALVE
A-A
B-B

FIG. 2

DIMENSIONS OF TYPE N PASSENGER-BRAKE CYLINDERS

Cylinder Size Inches	A In.	B In.	C In.	D In.	E In.	F In.	G In.	H In.	J In.	K In.	L In.	M In.	N In.	O In.	P In.	Q In.	R In.	S In.	T In.	U In.	Weight Lb.
8×12	16 3/16	9 3/16	7 1/16	36 13/16	17 5/16	10 1/8	4 1/16	4 1/2	11/16	5/8	5 3/8	4 9/16	4 3/8	1 1/8	1 1/8	1 1/8	4 1/16	6 1/16	8 7/8	19 3/4	190
10×12	15 11/16	7 5/8	7	34 3/8	15 1/2	11	4 11/16	4 1/4	11/16	11/16	6 5/8	5 11/16	4 1/16	1 1/8	1 1/8	1 1/8	5 3/16	6 1/16	8 7/8	17 1/16	235
12×12	16 1/16	9 5/16	7	37 7/8	17 1/2	17 1/2	7 1/2	4 11/16	15/16	7/8	7 3/8	6	4 3/8	1 1/8	1 1/8	1 1/8	5 1/4	8 1/2	11 7/16	18 1/4	335
14×12	16 1/2	9 5/16	7	37 3/16	17 5/8	17 1/2	7 1/2	4 11/16	15/16	7/8	8 11/16	7	4 3/8	1 1/4	1 1/4	1 1/8	7	8 1/2	11 15/16	20 7/16	425
16×12	16 11/16	9 1/16	7 5/16	37 3/4	17 7/16	19 1/2	8 3/8	4 3/4	1 1/16	7/8	9 3/4	8 1/8	4 11/16	1 1/4	1 1/4	1 1/4	8 1/8	7 3/8	11	20 1/8	550
18×12	17	9 7/16	8 1/8	39 3/16	17 5/8	21 1/2	9 3/8	4 5/8	1 1/16	1	10 3/4	9 1/8	5	1 3/8	1 1/4	1 3/8	9 1/8	8 7/16	12	20 1/8	700

TYPE N PASSENGER-BRAKE CYLINDERS

The type N passenger-brake cylinders, Fig. 2, are used with new schedule LN quick-action, quick-service, graduated-release, quick-recharge, high-emergency pressure, passenger-car brake equipments, the seat on the pressure head being suitable for the type L triple valve. Cylinders of 10 in. diameter or less are flat on top; end flanges and walls of body do not extend above supporting flange. It is strongly recommended that for all conditions where it is practicable, the hand-brake rigging be designed to work in harmony with the air-brake system. Where this is done, a slotted cross-head is used.

Unless otherwise specified, the quick-action triple valve head with slack adjuster lug having a detachable lever bracket is furnished on all orders for or including this part. The lever bracket can be easily removed to allow the application of the American automatic slack adjuster, thus obviating the changing of the cylinder head. If orders include slack adjusters, lever brackets will not be supplied. The dimensions and weights of the cylinders are given in the accompanying tables.

PIECE NUMBERS OF TYPE N PASSENGER-BRAKE CYLINDERS

Kind of Cylinder	L-1 Triple Valves		L-2 Triple Valves		L-3 Triple Valves	
	Size of Cylinders					
	8″×12″	10″×12″	12″×12″	14″×12″	16″×12″	18″×12″
	Piece Number of Part					
Type N passenger-brake cylinder, with plain crosshead, complete	19,208	24,352	17,627	17,441	16,574	50,376
Type N passenger-brake cylinder, with plain crosshead, comp ete, less lever bracket	19,209	24,353	17,628	17,442	16,581	50,378
*Type N passenger-brake cylinder, with slotted crosshead, complete	24,748	24,750	24,752	24,754	24,755	50,384
*Type N passenger-brake cylinder, with slotted crosshead, complete, less lever bracket	24,749	24,751	24,753	19,715	19,716	24,757

*The slotted crosshead, Ref. No. 6, is used when the hand-brake rigging is designed to work in harmony with the air-brake system, an arrangement that is recommended for all conditions where it is practicable.

PIECE AND REFERENCE NUMBERS OF VARIOUS PARTS OF TYPE N PASSENGER-BRAKE CYLINDERS

Name of Part	Ref. No.	L-1 Triple Valves		L-2 Triple Valves		L-3 Triple Valves	
		Size of Cylinders					
		8″×12″	10″×12″	12″×12″	14″×12″	16″×12″	18″×12″
		Piece Number of Part					
Cylinder body, complete	2	15,039	5,177	5,178	5,180	5,158	12,806
Piston and rod, includes 11 only	3	3,614	1,503	1,507	1,531	1,282	12,807
Non-pressure head	4	3,325	1,499	1,512	1,535	1,271	12,756
†Pressure head, less bracket, includes 14, 16, and 18	5	13,083	13,085	17,611	17,444	13,079	14,633
†Pressure head, with bracket, includes 14, 16, 17, and 18	5	11,175	10,097	17,629	17,443	13,080	50,377
Plain crosshead	6	1,501	1,501	5,647	8,659	11,552	50,010
*Slotted crosshead	6	13,174	13,174	13,175	10,574	10,575	21,265
Cylinder gasket	7	1,147	1,114	1,038	1,023	1,083	12,779
Follower	8	1,142	1,108	1,033	1,010	1,276	12,640

Packing leather	9	28,710	28,711	28,712	28,713	28,714	28,715
Packing expander	10	1,145	1,112	1,036	1,015	1,079	12,745
Follower stud and nut	11	2,305	2,305	5,184	5,184	5,189	12,791
Release spring	12	1,110	1,110	1,090	1,077	1,275	12,802
Cylinder-head bolt and nut	13	4,883	4,883	8,733	8,733	8,733	24,732
Triple-valve bolt and nut	14	19,224	13,142	5,187		12,925	12,925
‡Triple-valve gasket	15	8,969	8,969	9,356	9,356	12,794	12,794
Triple-valve stud and nut	16			4,887	4,887	12,274	12,274
Lever bracket	17	1,456	1,456	1,456	4,010	4,010	50,285
Lever-bracket bolt and nuts	18	10,819	10,819	10,819	10,819	10,819	12,977
Crosshead rivet	19	1,285	1,285	1,284	1,284	1,280	12,981
⅛-in. pipe plug		1,635	1,635	1,635	1,635	1,635	1,635
½-in. exhaust-pipe plug					1,004	1,004	1,004
½-in. pipe plug		1,004	1,004	1,004	1,004	1,004	1,004
¾-in. pipe plug		2,202	2,202	2,202	2,202	2,202	2,202
1-in. pipe plug		1,636	1,636	1,636	1,636	1,636	1,636

*See foot note on page 351.

†Unless otherwise specified, the quick-action triple-valve head with slack-adjuster lug, with a detachable lever bracket, will be furnished on all orders for or including this part. This bracket can be easily removed to allow the application of the American automatic slack adjuster, thus obviating the necessity of changing the head. Should orders including cylinders or cylinder heads also cover slack adjusters, detachable brackets will not be supplied.

‡Listed for convenience only; not included in complete brake cylinder.

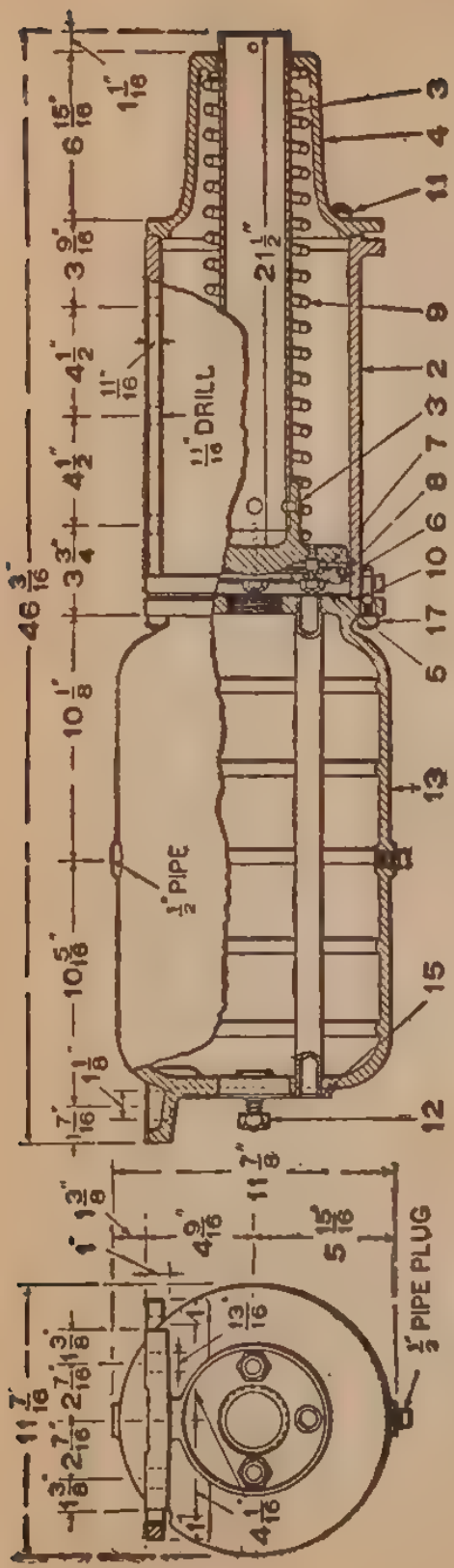
11/16" DRILL
1/2" PIPE
1/2" PIPE PLUG

FIG. 3

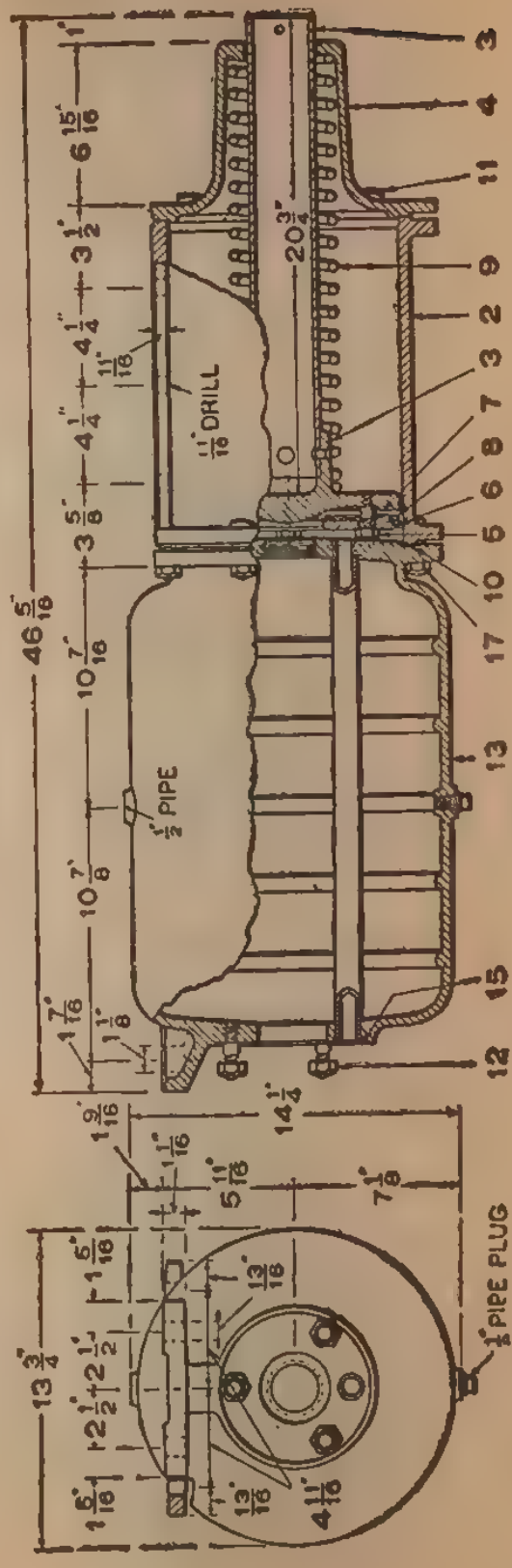
11/16" DRILL
1/2" PIPE
1/2" PIPE PLUG

FIG. 4

FREIGHT-BRAKE CYLINDERS

TYPE C, 8″×12″ FREIGHT-BRAKE CYLINDER AND RESERVOIR COMBINED

Freight-brake cylinders are made in two styles, the type C in which the cylinder is secured to or combined with the auxiliary reservoir, and the type D in which the cylinder is detached from the reservoir. The type C brake apparatus, shown in Fig. 3, is furnished, with schedules HC-812 or KC-812, for freight cars the light weight of which is not less than 22,000 nor greater than 37,000 lb. The total leverage should never exceed 9 to 1. The piece number of the freight-brake cylinder and reservoir combined is 2,438; the weight, 225 lb. The piece and reference numbers of the various parts are:

Pc. No.	*Ref. No.*	*Name of Part*
1,216	2	Cylinder body, 8 in.×12 in.
1,246	3	Piston and rod, includes 5 only.
1,217	4	Non-pressure head.
2,305	5	Follower stud and nut.
1,142	6	Follower.
28,710	7	Packing leather.
1,145	8	Packing expander.
1,110	9	Release spring.
1,147	10	Cylinder gasket
4,883	11	Cylinder-head bolt and nut.
4,887	12	Reservoir stud and nut.
2,439	13	Reservoir, includes 12, 14, and 16.
1,004		Drain plug.
*2,427	15	Triple-valve gasket.
4,904		Reservoir tube.
4,889	17	Reservoir-cylinder bolt and nut.

TYPE C, 10″×12″, FREIGHT-BRAKE CYLINDER AND RESERVOIR COMBINED

The type C brake apparatus, shown in Fig. 4, is furnished, with schedules HC-1,012 and KC-1,012, for freight cars the light weight of which exceeds 37,000 lb. The total leverage

*Listed for convenience only; not included in Piece No. 2,438.

should never exceed 9 to 1. The piece number of the freight-brake cylinder and reservoir combined is 23,733; the piece and reference numbers of the various parts are given in the accompanying list. Weight, 300 lb.

Pc. No.	*Ref. No.*	*Name of Part*
1,250	2	Cylinder body, 10 in.×12 in.
5,037	3	Piston and rod, includes 5 only.
1,104	4	Non-pressure head.
2,305	5	Follower stud and nut.
1,108	6	Follower.
28,711	7	Packing leather.
1,112	8	Packing expander.
1,110	9	Release spring.
1,114	10	Cylinder gasket.
4,883	11	Cylinder-head bolt and nut.
4,887	12	Reservoir stud and nut.
21,838	13	Reservoir, includes 12, 14, and 16.
1,004		Drain plug.
*4,886	15	Triple-valve gasket.
4,906		Reservoir tube.
4,889	17	Reservoir-cylinder bolt and nut.

TYPE D, 8″×12″, FREIGHT-BRAKE CYLINDER AND RESERVOIR DETACHED

The type D brake apparatus, shown in Fig. 5, is furnished, with schedules HD-812 or KD-812, for freight cars the light weight of which is not less than 22,000 nor greater than 37,000 lb., but the construction of which prevents the application of the type C brake. The total leverage should never exceed 9 to 1. The connection between the auxiliary reservoir and brake cylinder should be as short as possible; if piping exceeds 8 or 10 ft., the braking effect is likely to be noticeably impaired. The piece number of the freight-brake cylinder, with plain pressure head, complete, is 2,447; of type D, freight auxiliary reservoir, complete, 2,445. Either a plain head with lever bracket lug, Pc. No. 15,385, or a plain head with detachable bracket, Pc. No. 4,952, is furnished with complete brake cylinders, at an extra price, except when included with full sets of freight brakes, in which case no extra charge is made. Net weight of cylinder, 130 lb.; auxiliary reservoir, 100 lb.

---

*Listed for convenience only; not included in Piece No. 2,438.

Pc. No.	Ref. No.	Name of Part
1,216	2	Cylinder body, 8 in. × 12 in.
1,246	3	Piston and rod, includes 5 only.
1,217	4	Non-pressure head.
2,305	5	Follower stud and nut.
1,142	6	Follower.
28,710	7	Packing leather.
1,145	8	Packing expander.
1,110	9	Release spring.
1,147	10	Cylinder gasket
4,883	11	Cylinder-head bolt and nut.
4,887	12	Reservoir stud and nut.
2,445	13	Detached reservoir (includes 12 and ½-in. drain plug).
1,004		Drain plug.
*2,427	15	Triple-valve gasket.
2,448	18	Pressure head.

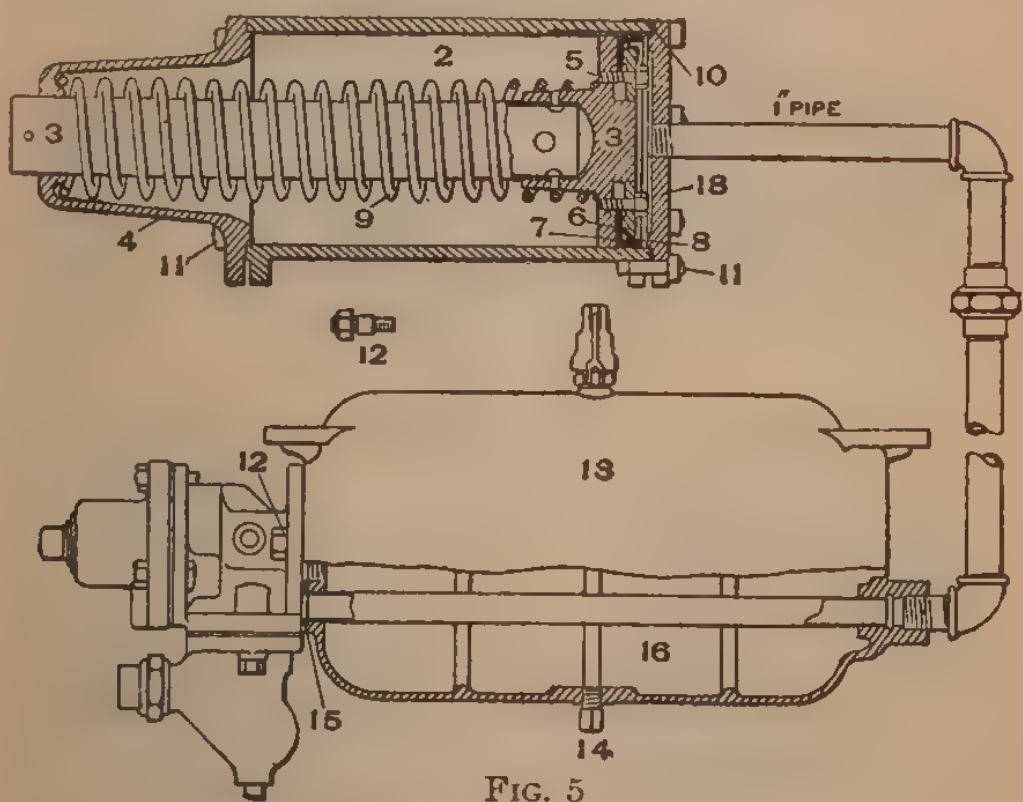

FIG. 5

In freight-brake equipment, the connection between the auxiliary reservoir and the brake cylinder should be as short as possible. If piping exceeds 8 or 10 ft., the braking effect is likely to be noticeably impaired.

*Listed for convenience only, not included in Piece No. 23,733.

An improved form of brake-cylinder expander ring, called the J-M expander ring, has recently been introduced. This ring embodies certain mechanical features of merit in the matter of applying and maintaining brake-cylinder packing leathers, and has proved very satisfactory in actual service. The W. A. B. Company carries all sizes in stock at Wilmerding, Pa., and will substitute this ring for the standard expander ring on request and at an additional price.

TYPE D, 10″×12″, FREIGHT-BRAKE CYLINDER AND RESERVOIR DETACHED

The type D brake apparatus, shown in Fig. 6, is furnished, with schedules HD-1,012 or KD-1,012, for freight cars the

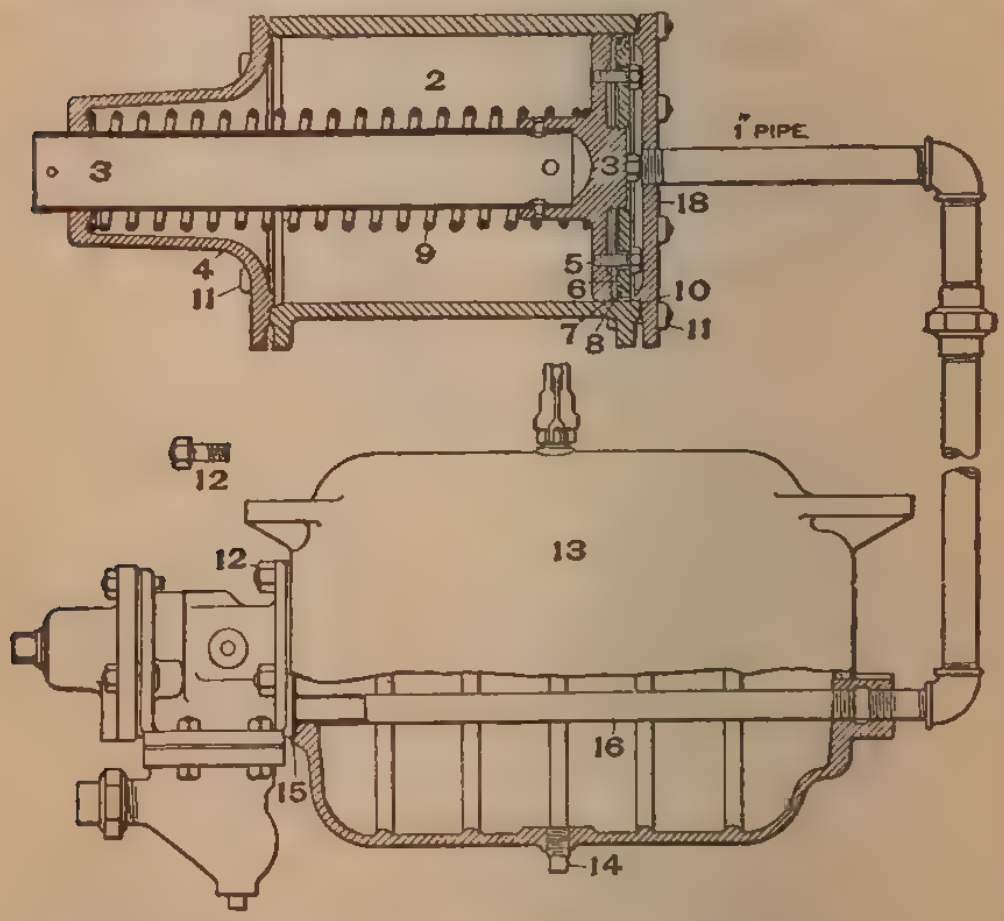

FIG. 6

light weight of which exceeds 37,000 lb., but the construction of which prevents the application of the type C brake. The total leverage should never exceed 9 to 1. The connection

between the auxiliary reservoir and brake cylinder should be as short as possible; if piping exceeds 8 or 10 ft., the braking effect is likely to be noticeably impaired. The piece number of the freight-brake cylinder, with plain pressure head, complete, is 4,868; of type D freight auxiliary reservoir, complete, is 24,446. The piece and reference numbers of the various parts are given in the accompanying list.

Pc. No.	*Ref. No.*	*Name of Part*
1,250	2	Cylinder body, 10 in.×12 in.
1,251	3	Piston and rod, includes 5 only.
1,104	4	Non-pressure head.
2,305	5	Follower stud and nut.
1,108	6	Follower.
28,711	7	Packing leather.
1,112	8	Packing expander.
1,110	9	Release spring.
1,114	10	Cylinder gasket.
4,883	11	Cylinder-head bolt and nut.
4,887	12	Reservoir stud and nut.
24,446	13	Detached reservoir, includes 12, 14, and 16.
1,004	14	Drain plug.
*4,886	15	Triple-valve gasket.
4,906	16	Reservoir tube.
4,869	18	Pressure head.

CLEANING THE BRAKE CYLINDER

The non-pressure head and the piston should be removed from the brake cylinder and the cylinder cleaned with kerosene and waste to remove all the gum and dirt so that the walls will have a smooth surface. The leakage groove should be scraped out clean and the walls of the cylinder rubbed with waste saturated with kerosene. If there are any rough or rusty spots left, they should be smoothed with fine sandpaper; then all traces of the kerosene and dirt removed and the wall of the cylinder thoroughly covered with heavy grease provided for that purpose, rubbing it on well with the hand giving the best results. When cleaning the brake piston, take out the expander ring and clean the piston-packing leather by rubbing

*Listed for convenience only, not included in Piece No. 24,446.

it with clean oily waste. If the leather is worn out or imperfect in any way, replace it with a new one. The flesh side of the leather should be next to the cylinder walls, because it wears better and is not so apt to leak when put in this way. See that the follower head is in good condition and that the bolts are tight; also, that the piston rod is tight in the piston head. Soften the packing leather by working it with grease; put some grease in the expander-ring groove and replace the piston in the cylinder. To enter the piston properly, start it in edgewise, having the rod extended downwards at 45° with the cylinder; then slowly raise the piston while shoving the packing leather into the cylinder with the fingers. When it is entered, shove it back to position and turn the piston rod so that the expander-ring joint will be at the side of the cylinder and away from the leakage groove; secure the non-pressure head. Also, see that the bolts that secure the brake cylinder to the car are tight. The brake may then be properly connected up, tested, and any rules and regulations regarding records, etc. complied with.

CROSS-SECTIONAL AREA OF BRAKE CYLINDERS

Size of Cylinder Inches	Area Square Inches
8	50¼
10	78½
12	113
14	154
16	201
18	254½

CROSS-SECTIONAL AREA OF CYLINDERS

The accompanying table gives the cross-sectional areas for the standard sizes of brake cylinders. The calculation of the capacity of brake cylinders and reservoirs may be made by the following rule:

Rule.—To find the cross-sectional area of a cylinder, in square inches, multiply the internal diameter, in inches, by the diameter and by .7854.

EXAMPLE.—What is the cross-sectional area of a cylinder whose internal diameter is 10 in.?

SOLUTION.—The area equals $10 \times 10 \times .7854 = 78.54$ sq. in., call it 78½ sq. in.

CAPACITY OF CYLINDERS

The capacity of a brake cylinder may be found by applying the following rule:

Rule.—*To find the capacity of a brake cylinder, in cubic inches, multiply the cross-sectional area of the cylinder, in square inches, by the piston travel, in inches.*

EXAMPLE.—What is the capacity of an 8-in. brake cylinder having an 8-in. piston travel?

SOLUTION.—The area of the cylinder (from table) is $50\frac{1}{4}$ sq. in. The travel of the piston is 8 in. Hence, the capacity of the cylinder is $8 \times 50\frac{1}{4} = 402$ cu. in.

The capacity of a brake cylinder is really greater than the amount calculated by this rule, for the reason that there is extra capacity that the rule does not take into consideration.

CAPACITY OF AIR-BRAKE CYLINDERS

Size of Cylinder Inches	Piston Travel Inches	Capacity Cubic Inches
8	8	450
10	8	675
12	8	950
14	8	1,280
16	8	1,650
18	8	2,085

In freight equipment, the capacity of the auxiliary tube and the cylinder clearance (the space between the brake-cylinder piston and the end of the auxiliary when the piston is in the position it assumes when the brake is released) is not considered, while in passenger equipment, the capacity of the passage in the brake-cylinder head and the cylinder clearance must be added to the cylinder capacity. Usually about 48 cu. in. is added to the calculated capacity of a brake cylinder to make up for the cylinder clearance, etc.

In the accompanying table, the capacities of the standard brake cylinder are given, due allowance having been made for cylinder clearance, etc.

If the rule for the capacity of a cylinder is applied for a piston travel of 1 in., the number of cubic inches the capacity of a brake cylinder will change for each inch increase or decrease of piston travel, is numerically equal to the area of the cylinder. For example, the capacity of an 8-in. cylinder will change 50¼ cu. in. for every 1 in. of change in the piston travel; that of a 10-in. cylinder will change 78½ cu. in.; that of a 12-in. cylinder, 113 cu. in.; and so on.

FORCE EXERTED IN BRAKE CYLINDER

The total allowable braking force should not be exceeded when an emergency application of the brakes is made, since at such times it is especially important that no wheels slide,

FORCE EXERTED IN BRAKE CYLINDER

Size of Cylinder Inches	Force Exerted	
	With 50 Pounds Pressure Pounds	With 60 Pounds Pressure Pounds
6	1,400	1,700
8	2,500	3,000
10	3,900	4,700
12	5,650	6,800
14	7,700	9,200
16	10,000	12,000
18	12,700	15,250

as a sliding wheel exerts but little retarding force. For this reason, the braking power is calculated on the assumption that, in an emergency application, 60 lb. pressure is obtained in the brake cylinder with a quick-action brake, and 50 lb. with a plain triple.

The total force, in pounds, that a brake cylinder will develop when subjected to 50 and 60 lb. pressure per sq. in. has been calculated for several sizes of cylinders; the results are given in the accompanying table.

The force exerted in a brake cylinder is found by multiplying the area of the piston, in square inches, by the pressure per square inch in the cylinder. Thus, if the piston has an area of 154 sq. in., it will develop a force of $154 \times 50 = 7{,}700$ lb. under a 50-lb. pressure.

The area of a piston may be found by multiplying the diameter of the piston, in inches, by the diameter and by 11, and dividing by 14. Thus, the area of a 10-in. piston is $\frac{10 \times 10 \times 11}{14} = 78\frac{1}{2}$ sq. in., nearly. Another, and slightly more accurate, method of calculating the area of a piston is to multiply the diameter, in inches, by the diameter, and by .7854.

FILLER BLOCKS

The filler block with double check-valve is used with freight-car brake equipments having the type K triple valve where it

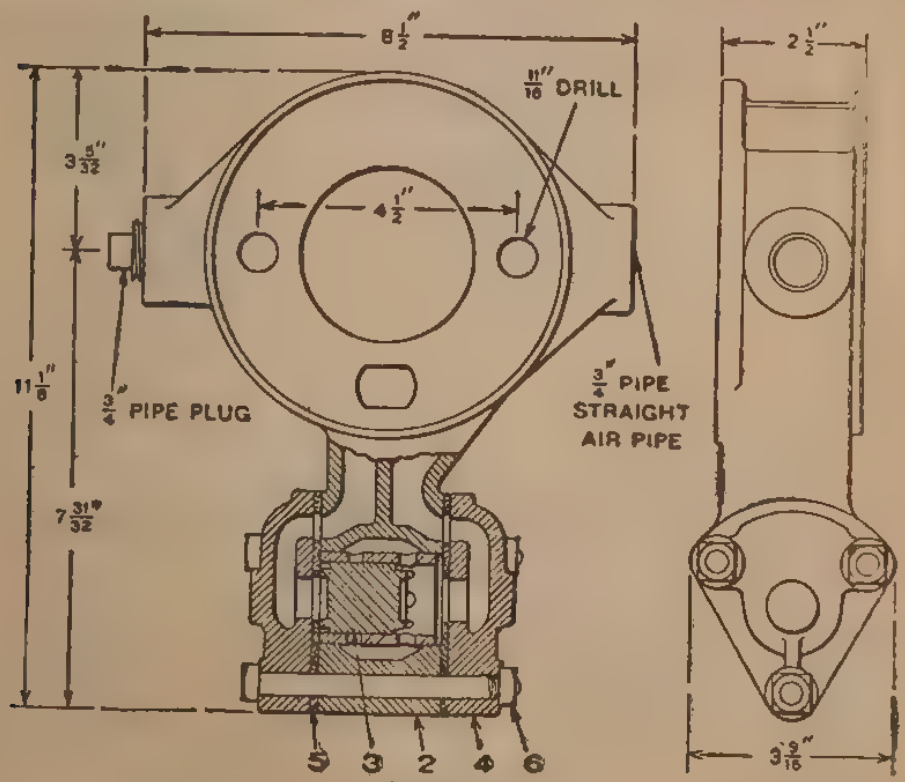

FIG. 1

is desired to combine the straight-air brake with the automatic brake for heavy-grade service, and where a straight-air brake is desired on such self-propelled vehicles as steam shovels,

derrick cars, etc. The filler block is inserted between the triple valve and the reservoir, and is fastened to the reservoir by two studs, Piece No. 13,435, for the K-1 triple valve and three studs for the K-2 triple valve. An extra gasket suitable for the triple valve employed is also required. Fig. 1 illustrates the

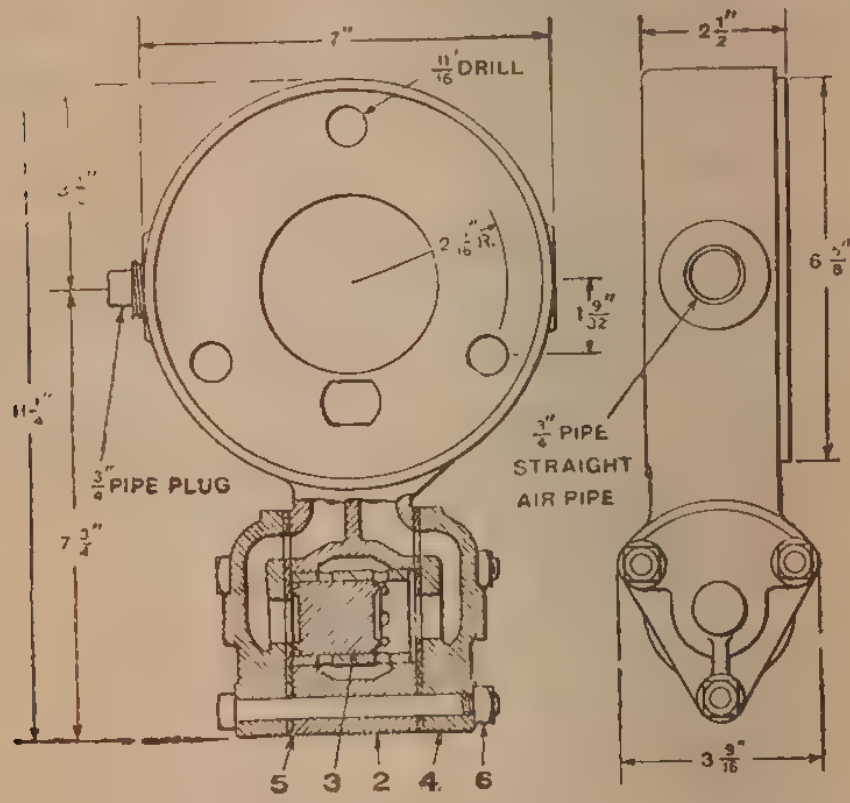

FIG. 2

filler block used with the K-1 triple valve, and Fig. 2 the filler block used with the K-2 triple valve. Their weights are 19¼ lb. for the K-1 block, and 19 lb. for the K-2 block.

FILLER BLOCK WITH DOUBLE CHECK-VALVE

For K-1 Triple Valve

Pc. No.	*Ref. No.*	*Name of Part*
48,280		Filler block, complete.
47,838	2	Filler-block body, complete.
40,177	3	Check-valve.
40,317	4	Cover.
40,318	5	Cover gasket.
25,206	6	⅜″×4½″ square-head bolt and nut.
2,202		¾-in. pipe plug.

For K-2 Triple Valve

40,798		Filler block, complete.
40,770	2	Filler-block body, complete.
40,177	3	Check-valve.

Pc. No.	*Ref. No.*	*Name of Part*
40,307	4	Cover.
40,318	5	Cover gasket.
25,206	6	$\frac{3}{8}'' \times 4\frac{1}{2}''$ square-head bolt and nut.
2,202		$\frac{3}{4}$-in. pipe plug.

If filler block for use with K-1 triple valve, having automatic cover tapped for $\frac{1}{4}$-in. drain cock, is desired, the order must so state, giving the complete Piece No., 47,881. In that event, a check-valve cover tapped for $\frac{1}{4}$-in. drain cock, complete, Piece No. 48,202, will be substituted for the cover, Piece No. 40,317.

When cars already equipped with the old standard (schedule PM) apparatus are to be changed over to the standard schedule LN equipment, and when the foundation brake-gear design permits, it may be desirable to leave the old type M brake cylinder in position on the car instead of replacing it with a new type N cylinder. This can be accomplished by the use of one of the following filling blocks, one face of which fits the seat on the brake cylinder, the other face being a seat suitable for the type of triple valve to be used. When a filler block, Fig. 3, is used, an extra gasket, suitable for the triple valve employed, is required.

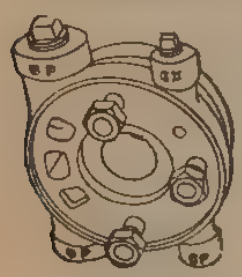

FIG. 3

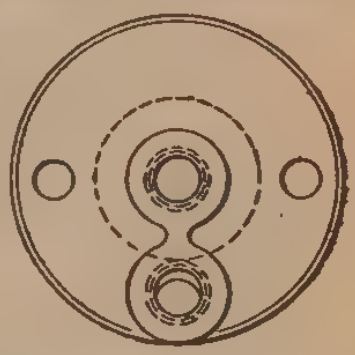

FIG. 4

Pc. No.	
9,361	Filler block for changing from P-1 to L-1-B triple valve
9,357	Filler block for changing from P-2 to L-2-A triple valve
13,006	Filler block for changing from P-2 to L-3 triple valve

In making the change from the PM equipment to the LN equipment and leaving the type M brake cylinder in place on the car, if it is found impracticable to use the filler block, the triple valve can be mounted on a bracket and a suitable cover plate, Fig. 4, bolted to the triple-valve seat on the brake-cylinder head, making the necessary pipe connections from the cover plate to the triple-valve bracket.

Pc. No.	
9,235	Cover plate for 6-, 8-, or 10-in. type M brake cylinders.
14,581	Cover plate for 12-, 14-, or 16-in. type M cylinders.

PRESSURE HEADS FOR TRUCK- AND TENDER-BRAKE CYLINDERS

Name	Piece No.	Type	Ref. No.
Plain head for			
6-in. cylinder	8,614	O	
8-in. cylinder	1,136	O	
10-in. cylinder	1,103	O	
12-in. cylinder	3,981	O	
14-in. cylinder	1,003	O	
16-in. cylinder	1,071	O	
Plain head with lever-bracket lug, bolts, and nuts for			
6-in. truck cylinder	4,938	P	
6-in. tender cylinder	56,162	P	
8-in. truck and tender cylinder	15,470	P	
10-in. truck and tender cylinder	14,084	P	
12-in. tender cylinder	14,088	P	
12-in. truck cylinder	18,118	P	
14-in. cylinder	14,091	P	
16-in. cylinder	15,472	P	
Plain head with detachable bracket for			
6-in. truck cylinder	4,941	Q	
6-in. tender cylinder	56,161	Q	
8-in. truck and tender cylinder	4,775	Q	
10-in. truck and tender cylinder	4,776	Q	
12-in. tender cylinder	4,777	Q	
12-in. truck cylinder	7,582	Q	
14-in. cylinder	4,942	Q	
16-in. cylinder	4,913	Q	
Plain head with connection for types H or P triple valves for			
8-in. cylinder	4,781	R	
10-in. cylinder	4,779	R	
12-in. cylinder	4,945	R	
14-in. cylinder	4,946	R	
16-in. cylinder	4,947	R	
Head with lever-bracket lug, bolts, and nuts, and connection for types H and P triple valves for			
6-in. cylinder	14,634	S	
8-in. cylinder	55,816	S	
10-in. cylinder	56,152	S	
12-in. cylinder	15,293	S	
14-in. cylinder	14,092	S	
16-in. cylinder	24,767	S	

TABLE—(*Continued*)

Name	Piece No.	Type	Ref. No.
Head with detachable bracket, and connection for types H and P triple valves for			
6-in. cylinder	10,151	T	
8-in. cylinder	55,817	T	
10-in. cylinder	56,151	T	
12-in. cylinder	3,630	T	
14-in. cylinder	8,617	T	
16-in. cylinder	24,766	T	
Detachable bracket complete, 6-in., 8-in., 10-in., and 12-in. cylinders	10,878		
Detachable bracket complete, 14-in. and 16-in. cylinders	10,820		
Detachable bracket bolt and nuts, each	10,819		1
Detachable bracket, 6-in., 8-in., 10-in., and 12-in. cylinders, each	1,456		2
Detachable bracket, 14-in. and 16-in. cylinders, each	4,010		2
Head with lever-bracket lug, bolts, and nuts, and connection for types H and P triple valves for use with combined automatic and straight-air brake, schedule SWB for			
8-in. cylinder	23,087		
10-in. cylinder	10,947		
12-in. cylinder	58,805		
14-in. cylinder	10,949		
16-in. cylinder	24,769		

AUXILIARY, SUPPLEMENTARY, AND EQUALIZING RESERVOIRS

The **auxiliary reservoirs** and brake cylinders with which they are used, according to the accompanying table, are so proportioned that an equalization pressure of 50 lb. will be obtained from 70 lb. auxiliary-reservoir pressure with 8-in. piston travel for tender and passenger-car equipments, and with 6-in. piston travel for truck-brake equipments. Driver-brake equipment ordinarily includes two cylinders and one reservoir of sizes given in table. When a single 18-in. driver-

brake cylinder is used, a 16″×42″ auxiliary reservoir should be used instead of 16″×48″. Standard freight-brake equipments include standard cast-iron auxiliary reservoirs, either detached or combined. Auxiliary reservoirs are tapped for ¾-in. pipe in one end; ½-in. pipe in other end; and (for drainage) in center of shell, ¼-in. pipe in reservoirs of 14-in. diameter or less, and ½-in. pipe in reservoirs of 16-in. or greater.

Supplementary reservoirs 16 in. in diameter or less are tapped for ¾-in. pipe in one end and ½-in. pipe in other end; reservoirs over 16 in. in diameter are tapped for ¾-in. pipe in both ends. For drainage in center of shell, reservoirs 14 in. in diameter and less are tapped for ¼-in. pipe and reservoirs of 16 in. in diameter or greater are tapped for ½-in. pipe. When one reservoir per car is used, the sizes given in the table should be specified.

If desirable, for any reason, two supplementary reservoirs may be used, in which event two reservoirs of proper size, as indicated in the accompanying table, should be specified.

The **service and emergency** reservoirs for PC equipment and brake cylinders with which they are used (see table) are so proportioned that an equalization of pressure of 86 lb. will be obtained from 110-lb. reservoir pressure with 8-in. piston travel for passenger-car equipments.

The reservoirs are tapped for 1-in. pipe at one end, for ½-in. pipe at the other end, and for ¼-in. pipe in center of shell (for drainage) in reservoirs of 14-in. diameter or less, and ½-in. pipe for reservoirs of 16-in. diameter or greater. Sixteen-inch reservoirs or less are made of O. D. pipe with semiconvex head welded in. Reservoirs of 20½-in. diameter have shell riveted and semiconvex heads welded in. Riveted joint is located 135° from drain to avoid lateral interference with hangers.

STANDARD SIZES OF AUXILIARY RESERVOIRS

Piece No.	Size Inches	Capacity Cubic Inches	Weight Pounds	Cylinders Used With: Driver Brake Inches	Truck Brake Inches	Tender Brake Inches	Passenger P or L Triple Inches	Freight H or K Triple Inches
24,408	10×14½	890	35		6		6×12	
24,825	10×20	1,221	40		8			
3,091	10×24	1,588	50	6		8×12	8×12	
24,826	10×28	1,809	55		10			
3,092	10×33	2,125	60	8				
24,827	12×27	2,450	75		12	10×12	10×12	
3,093	12×33	3,088	85	10		12×12	12×12	
3,094	14×33	4,476	110	12		14×12	14×12	
3,095	16×33	5,724	145	14		16×12	16×12	
3,096	16×42	7,436	175	16			18×12	
13,220	16×48	8,577	195	18				
2,439	standard cast iron	1,620						8 combined
21,838	standard cast iron	2,800						10 combined
2,445	standard cast iron	1,620						8 detached
24,446	standard cast iron	2,800						10 detached

SIZE OF SUPPLEMENTARY RESERVOIR, WHEN ONE PER CAR IS USED

Piece No.	Size of Reservoir Inches	Capacity of Reservoir Cubic Inches	Weight of Reservoir Pounds	Used With L Triple Valves, Passenger Car Cylinders Inches
3,094	14 ×33	4,476	110	8
3,095	16 ×33	5,724	145	10
13,220	16 ×48	8,577	195	12
23,384	20½×36	10,158	205	14
23,385	20½×48	14,003	255	16
27,505	22½×54	18,967	410	18

SIZE OF SUPPLEMENTARY RESERVOIR, WHEN TWO PER CAR ARE USED

Piece No.	Size of Reservoir Inches	Capacity of Reservoir Cubic Inches	Weight of Reservoir Pounds	Used With L Triple Valves, Passenger Car Cylinders Inches
3,092	10 ×33	2,125	60	8
3,093	12 ×33	3,088	85	10
3,094	14 ×33	4,476	110	12
3,095	16 ×33	5,724	145	14
3,096	16 ×42	7,436	175	16
23,384	20½×36	10,158	205	18

EQUALIZING RESERVOIR

The equalizing reservoir is used in connection with automatic brake valves. It is tapped for ⅜-in. pipe and has a capacity of 812 cu. in. The piece number of the 10″×14½″ equalizing reservoir is 4,884.

PC EQUIPMENT SERVICE AND EMERGENCY RESERVOIRS

Service Reservoirs				Cylinders Standard With Service and Emergency Reservoirs. Two Cylinders Fundamental With PC Equipment	Emergency Reservoirs			
Pc. No.	Size Inches	Capacity Cu. In.	Net Weight Pounds	Size, Inches	Pc. No.	Size Inches	Capacity Cu. In.	Net Weight Pounds
34,298	16 ×33	4,476	105	2–10×12	34,297	12 ×33	3,088	95
34,299	16 ×33	5,724	145	2–12×12	34,298	14 ×33	4,476	105
33,139	16 ×48	8,577	190	2–14×12	33,138	16 ×42	7,436	170
33,133	20½×36	10,158	205	2–16×12	33,139	16 ×48	8,577	190
22,872	20½×48	14,003	275	2–18×12	33,133	20½×36	10,158	205

RESERVOIR DRAIN COCKS

$\frac{1}{4}$-IN. AUXILIARY-RESERVOIR DRAIN COCKS

The piece number of the $\frac{1}{4}$-in. auxiliary-reservoir drain cock, shown in Fig. 1, is 41,814; its weight is $\frac{1}{2}$ lb.

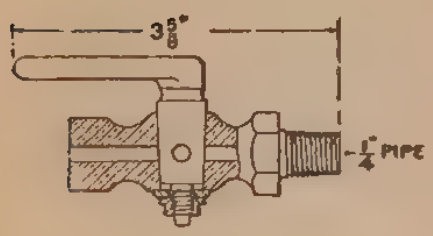

FIG. 1

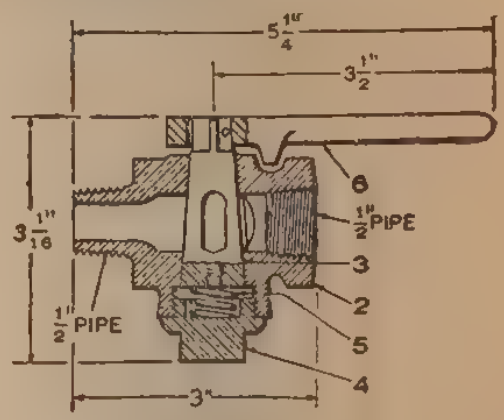

FIG. 2

$\frac{1}{2}$-IN. MAIN-RESERVOIR DRAIN COCKS

The piece number of the $\frac{1}{2}$-in. main-reservoir drain cock, shown in Fig. 2, is 7,716; its weight is $1\frac{1}{2}$ lb. The piece and reference numbers of the various parts are:

Pc. No.	*Ref. No.*	*Name of Part*
7,718	2	Body.
2,229	3	Key.
34,086	4	Cap.
2,231	5	Spring.
9,035	6	Handle.

Spring identification tables are shown to enable railroad storekeepers, air-brake men, and others interested in air-brake apparatus, to readily identify the various springs used in the different apparatus.

Spring Identification, Main-Reservoir Drain Cock

Pc. No.	Out. Dia. *A*, In.	Dia. Wire *B*, In.	Free Height *C*, In.	No. Coils	Material	Name of Spring
2,231	⅝	.091	⅝	$3\frac{1}{2}$	Brass	Key

RELEASE VALVES

Auxiliary-reservoir release valves, or *bleed cocks*, as they are often called, are made in two types. The vertical type, Piece No. 2,416, and shown in Fig. 1, is regularly furnished as standard with full sets of freight brake equipment; the horizontal type, Piece No. 30,059, and shown in Fig. 2, is furnished only when specified and at an additional charge. The horizontal valve can be cleaned and repaired, or the internal parts may be replaced without removing the valve from the auxiliary reservoir simply by removing the valve cap *24*. The vertical valve weighs $1\frac{1}{2}$ lb., whereas the horizontal valve weighs $2\frac{1}{8}$ lb. The piece and reference numbers of the various parts of the vertical release valve are given in the accompanying list.

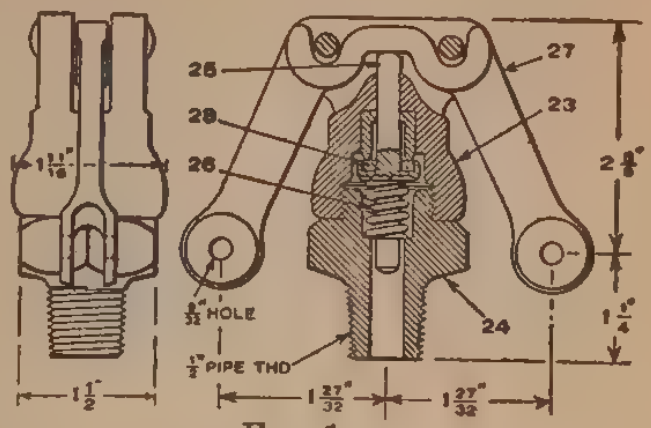

FIG. 1

Pc. No.	*Ref. No.*	*Name of Part*
2,417	23	Cylinder, bushed.
2,420	24	Stud.
2,421	25	Vent valve, complete.
2,424	26	Spring.
2,425	27	Handle.
2,423	28	Rubber seat.

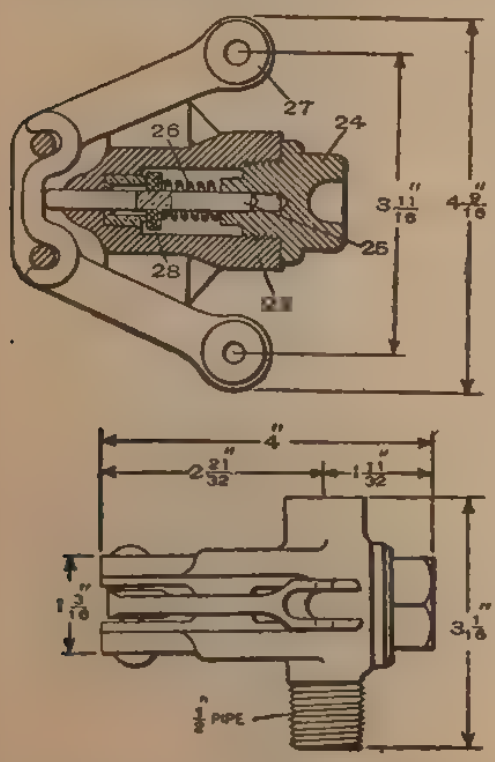

FIG. 2

The piece and reference numbers of the various parts of the horizontal release valve are given in the accompanying list.

Pc. No.	*Ref. No.*	*Name of Part*
30,093	23	Cylinder, bushed.
30,092	24	Valve cap.
2,421	25	Vent valve, complete.
2,424	26	Spring.
2,425	27	Handle.
2,423	28	Rubber seat.

Operation of Release Valve.—The release valve is located on the auxiliary reservoir, and is used to reduce auxiliary-reservoir pressure in the event of a brake sticking, due to the triple valve not moving to release position. Also, the valve is used to relieve the auxiliary reservoir of pressure when a brake is cut out. In using the release valve to release a brake, the valve must be quickly opened its full amount and then closed the instant a blow is heard at the triple-valve exhaust port.

PRESSURE-RETAINING VALVES

PURPOSE OF RETAINING VALVES

The pressure-retaining valve is included in all freight-brake equipments, whether specified or not. It is furnished with passenger equipments, without extra charge, if specified on the order; it is not a part of the regular passenger schedule, however, and must be specified if desired. Care should be exercised to indicate the proper type of valve, depending on whether or not the car is of the vestibule type. It is located at the end of the car, within easy reach of the trainmen when the train is in motion, and is connected by a pipe with the exhaust port of the triple valve. Its purpose is to retard the discharge of air from, and retain a predetermined pressure in, the brake cylinder while the triple valve is in release position and the engineer is recharging the auxiliaries after a release on a grade, to be ready for another application of the brakes.

SINGLE-PRESSURE WEIGHT-TYPE RETAINING VALVES

Two types of pressure-retaining valves are now in use; the weight type and the spring type. Both types are made in the

form of single-pressure and double-pressure retaining valves. The type 15-O retainer, Fig. 1, has a vent port $\frac{1}{16}$ in. in diameter and is used with 6-in., 8-in., and 10-in. freight- or passenger-brake cylinders; it weighs 4 lb. The type 15-A retainer, Fig. 2, has a vent port $\frac{1}{8}$ in. in diameter and is used with 12-in., 14-in., and 16-in. freight- or passenger-brake cylinders; it weighs $6\frac{1}{2}$ lb. Type 15-B and type 15-C retaining valves, Figs. 3 and 4, have adjustable handles for vestibule passenger cars having partitions $2\frac{3}{4}$ in. to 6 in. thick. The 15-B retainer is used with 6-in., 8-in., and 10-in. brake cylinders, and weighs $5\frac{1}{2}$ lb.; the 15-C, with 12-in., 14-in., and 16-in. cylinders, and weighs 8 lb. The double-pressure type retainer has three positions of the handle: Straight down is release position;

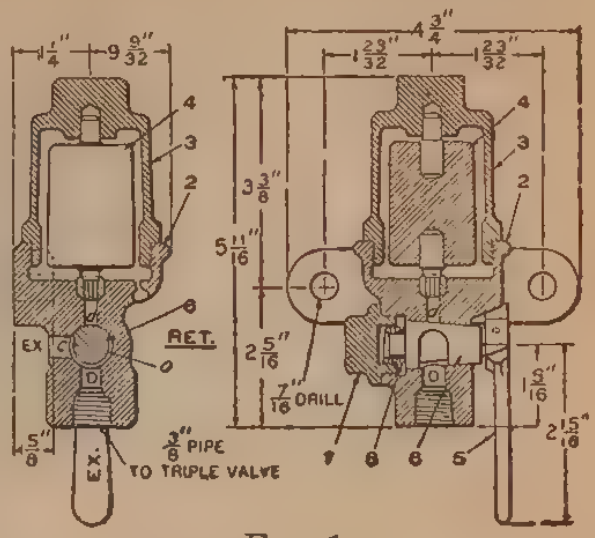

FIG. 1

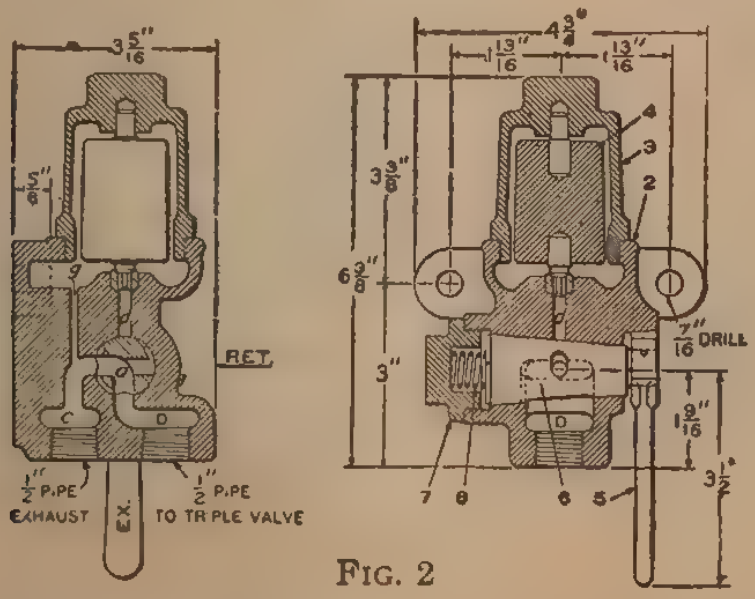

FIG. 2

horizontal is low-pressure position; midway is high-pressure position.

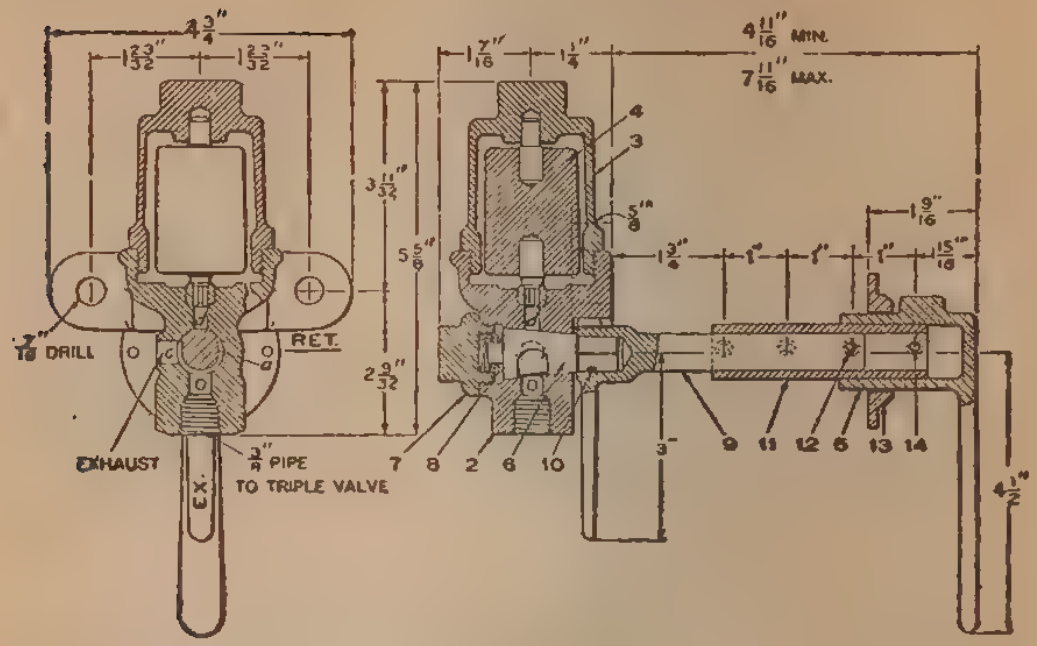
4 3/4"
1 23/32"
1 23/32"
1 7/16"
1 1/4"
4 11/16" MIN.
7 11/16" MAX.
3 11/32"
5 5/8"
2 9/32"
5/8"
1 9/16"
1 3/4"
1"
1"
1"
15/16"
7/16" DRILL
RET.
EXHAUST
3/8" PIPE
TO TRIPLE VALVE
EX.
3"
4 1/2"
1
2
3
4
5
6
7
8
9
10
11
12
13
14

FIG. 3

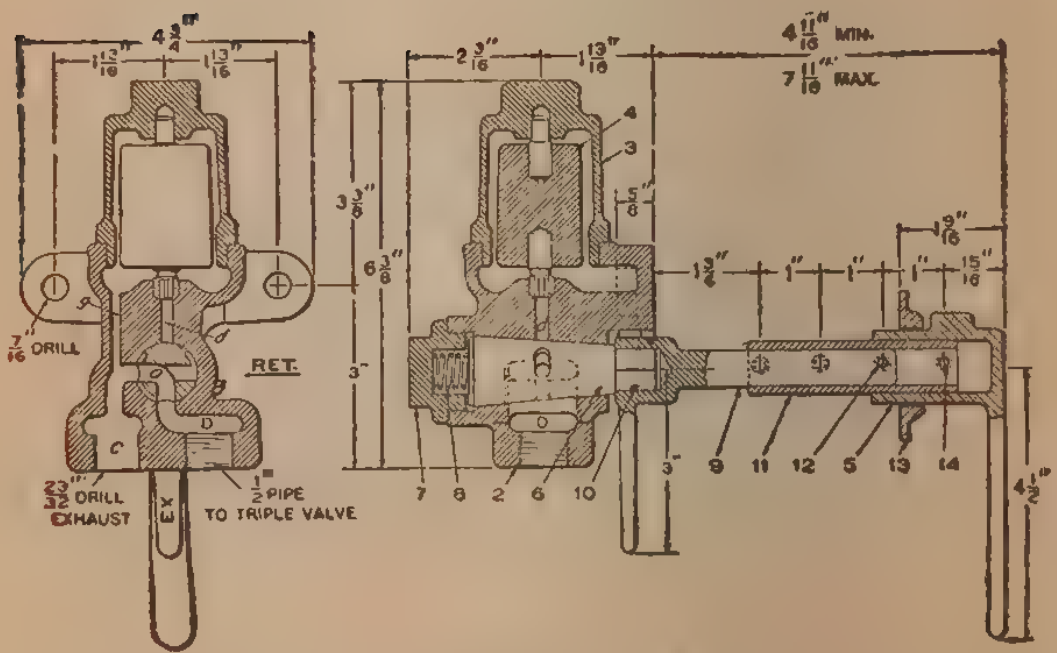
4 3/4"
1 13/16"
1 13/16"
2 3/16"
1 13/16"
4 11/16" MIN.
7 11/16" MAX.
3 3/8"
6 3/8"
5/8"
1 9/16"
1 3/4"
1"
1"
1"
15/16"
7/16" DRILL
RET.
3"
23/32" DRILL
EXHAUST
1/2" PIPE
TO TRIPLE VALVE
EX.
4 1/2"
1
2
3
4
5
6
7
8
9
10
11
12
13
14

FIG. 4

The piece and reference numbers of the type 15 pressure-retaining valves are given in the accompanying lists.

Pc. No.	*Ref. No.*	*Name of Part*
2,449		Type 15-O pressure-retaining valve, complete.
2,450		Body, complete, includes 5, 6, 7, and 8.
2,452	2	Body, bushed.
2,457	3	Case.
2,458	4	Weight, complete.
2,105	5	Handle.
2,455	6	Cock key.
2,367	7	Cock cap.
2,231	8	Key spring.
4,661		Type 15-A pressure-retaining valve, complete.
4,670		Body, complete, includes 5, 6, 7, and 8.
4,662	2	Body, bushed.
2,457	3	Case.
2,458	4	Weight, complete.
4,415	5	Handle.
4,095	6	Cock key.
3,758	7	Cock tap.
2,145	8	Key spring.
7,813		Type 15-B pressure-retaining valve, complete.
9,602		Body, complete, includes 5 to 14 inclusive.
8,786	2	Body, bushed.
2,457	3	Case.
2,458	4	Weight, complete.
7,672	5	Handle.
7,812	6	Cock key.
2,367	7	Cock cap.
2,231	8	Key spring.
7,811	9	Extension socket.
8,049	10	Extension-socket cotter.
7,674	11	Extension-socket sleeve.
7,676	12	Extension-socket sleeve pin.
7,673	13	Handle plate.
2,238	14	Handle pin.
7,647		Type 15-C pressure-retaining valve, complete.
9,609		Body, complete, includes 5 to 14 inclusive.
7,645	2	Body, bushed.
2,457	3	Case.
2,458	4	Weight, complete.
7,672	5	Handle.
7,646	6	Cock key.
3,758	7	Cock cap.
7,679	8	Key spring.
7,671	9	Extension socket.
8,049	10	Extension-socket cotter.

Pc. No.	*Ref. No.*	*Name of Part*
7,674	11	Extension-socket sleeve.
7,676	12	Extension-socket sleeve pin.
7,673	13	Handle plate.
2,238	14	Handle pin.

OPERATION OF RETAINING VALVES

With the retaining-valve handle in release position, or straight down, the air that escapes from the exhaust port of the triple valve passes through the retainer pipe and out through the retainer exhaust port without passing up into the valve case, thus giving a free exhaust for the air from the brake cylinder. If the handle is turned up to the horizontal, or retaining, position, the free exhaust opening of the retainer is closed and the air from the brake cylinder must then pass around the retainer plug valve and up against the retainer valve. This valve is held on its seat by a weight in the weight types of retainers, or by a spring in the spring types, either of which is designed to hold the valve down against a predetermined pressure, usually of 15 lb. If the air coming from the brake cylinder has a pressure exceeding 15 lb., it will raise the valve and pass up into the retainer case *3*. It must then pass out through a small vent port, the diameter of which at its smallest part is $\frac{1}{16}$ in. for the 15-lb. retainer. This retards the flow of air so that it takes about 20 to 25 sec. for the air to pass out of an 8-in. cylinder with 8-in. travel and to reduce the pressure from 50 to 15 lb.; thus sufficient time is given for the auxiliaries to recharge from 50 to 70 lb. before the pressure is reduced to 15 lb. The brake cylinder reduces gradually during the recharging, and the retainer finally keeps 15 lb. until the retainer handle *5* is turned down to the vertical position and opens the exhaust port. With larger cylinders, the use of this size retainer would make the time for reducing the pressure from 50 to 15 lb. proportionately longer. The small vent port would choke the discharge of air so that the weight *4* would close the weight valve at short intervals during the reduction. The restricted opening of the vent port is a valuable feature of this valve.

DOUBLE-PRESSURE WEIGHT-TYPE RETAINING VALVES

The double-pressure weight-type of retaining valve is furnished for two different sets of pressures; namely, 15–30 lb.

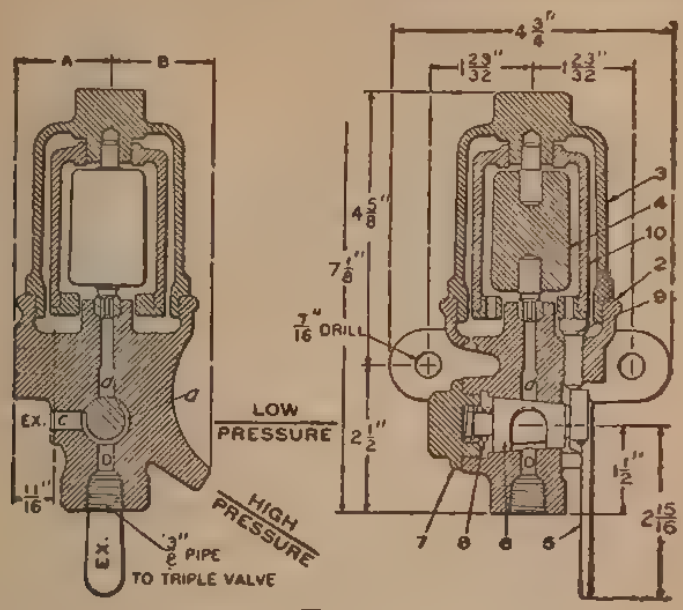

FIG. 1

and 25–50 lb. The 15–30 lb. retaining valve, Fig. 1, regulates the pressure at 15 lb. when the handle is horizontal, or in the low-pressure position, and at 30 lb. when the handle is in the high-pressure position. It is used with 6-in., 8-in., and 10-in. brake cylinders, and weighs 6½ lb.

Type	Pc. No.	*A*	*B*	Net Weight
15–30	10,970	1 9/16 in.	1 11/16 in.	6½ lb.
25–50	7,880	1¾ in.	1¾ in.	7¾ lb.

The 25–50-pound retaining valve regulates the pressure at 25 and 50 lb. It is used with 6-in., 8-in., and 10-in. brake cylinders and weighs 7¾ lb. The piece and reference numbers of the valves and of their various parts are given in the accompanying list.

Operation.—This type of pressure-retaining valve operates like the older types, except that the weight can be increased so as to make it a two-pressure retainer. The weights *4* and *10* are equal. The weight *10* is cylindrical and surrounds the weight *4*. It can be raised off of weight *4* or lowered on to it

15–30	25–50	Ref. No.	Name of Part
Piece Numbers			
10,970	7,880		Valve, complete
10,973	9,610		Body, complete, includes 5, 6, 7, and 8
10,922	7,877	2	Body, bushed
10,977	7,869	3	Case
11,756	7,878	4	Inside weight, complete
7,871	7,871	5	Handle
7,870	7,870	6	Cock key
7,875	7,875	7	Cock cap
2,231	2,231	8	Key spring
7,879	7,879	9	Weight-lifting rod
10,976	9,611	10	Outside weight, complete

by turning the handle *5* to the proper position. With the handle straight down, the retainer is cut out of service. In this position the handle engages rod *9* and raises weight *10* off of weight *4* so as to reduce the wear of the valve seat. With the handle in its intermediate position, the weight *10* rests on the weight *4*. This doubles the amount of retainer weight, so that the high pressure is retained, as the pressure must raise both weights to escape. With the handle horizontal, the weight *10* is raised off the weight *4* so that the weight *4* alone is in use; thus the low pressure is retained.

SINGLE-PRESSURE SPRING-TYPE RETAINING VALVES

The spring-type retaining valve is of an improved design providing a uniform blow-down of cylinder pressure; that is, in proportion to the size of the cylinder. It is provided with an opening tapped for a gauge connection, thereby permitting of brake-cylinder leakage being readily tested without having to disconnect the retainer pipe at the triple valve. Single-pressure, Fig. 1, or double-pressure, Fig. 2, retaining valves are provided for freight-brake equipments, and a single-pressure valve, Fig. 3, for passenger equipment. The single-pressure retainers for freight and passenger equipments are sufficiently different in appearance to be readily distinguished. Both are made for two pressures, one to retain 10 lb. and the other 15 lb. The double-pressure retaining valve is made for three pressures, to retain 10–20 lb., 15–30 lb., or 25–50 lb. The

passenger equipment retaining valve is made in two sizes. The one used with 8-, 10-, and 12-in. cylinders weighs $4\frac{3}{4}$ lb.;

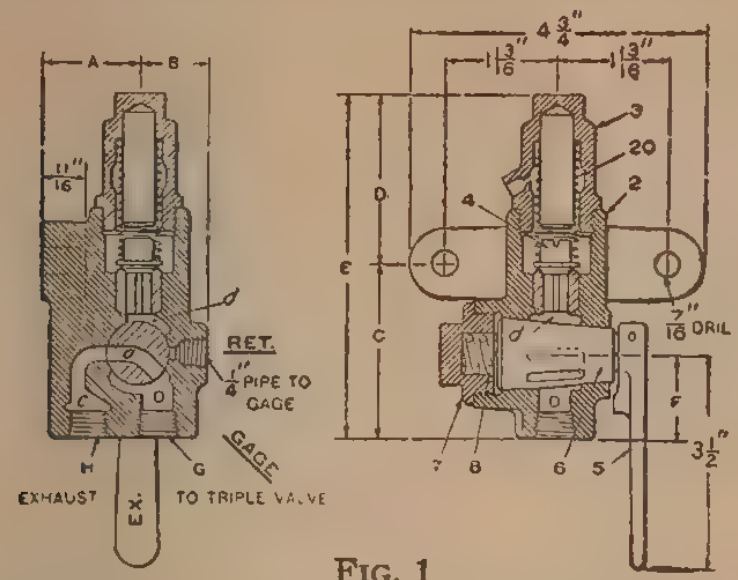

FIG. 1

that used with 14-, 16-, and 18-in. cylinders, weighs $5\frac{3}{4}$ lb. The single-pressure freight retainer weighs $3\frac{1}{4}$ lb., and the double-pressure retainer, 4 lb.

Either the freight or the passenger single-pressure retaining valve will be furnished with locomotive brake equipments

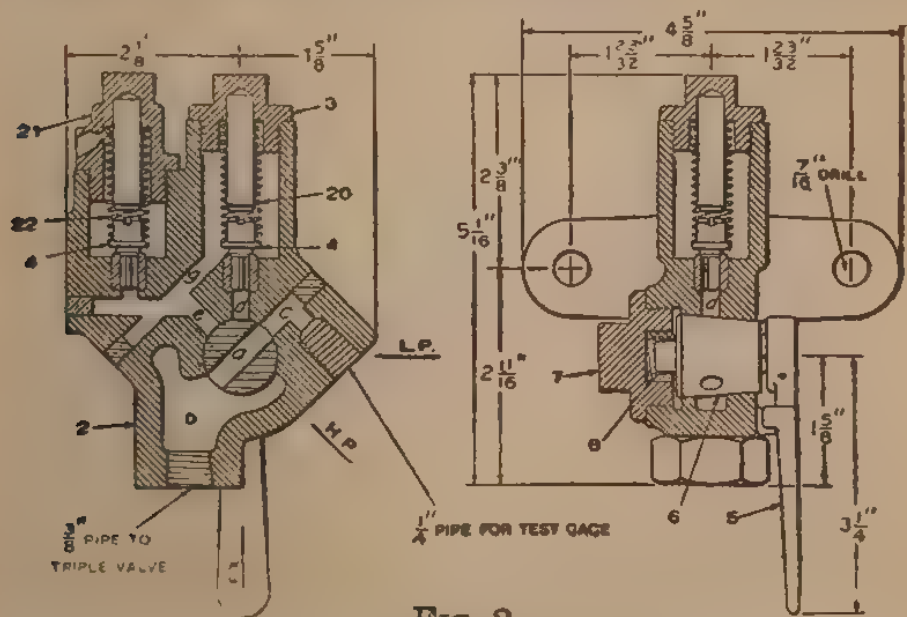

FIG. 2

when specified on the order, but an additional charge is made for it.

The piece and reference numbers of the single-pressure freight retaining valves are given in the accompanying list. This retain-

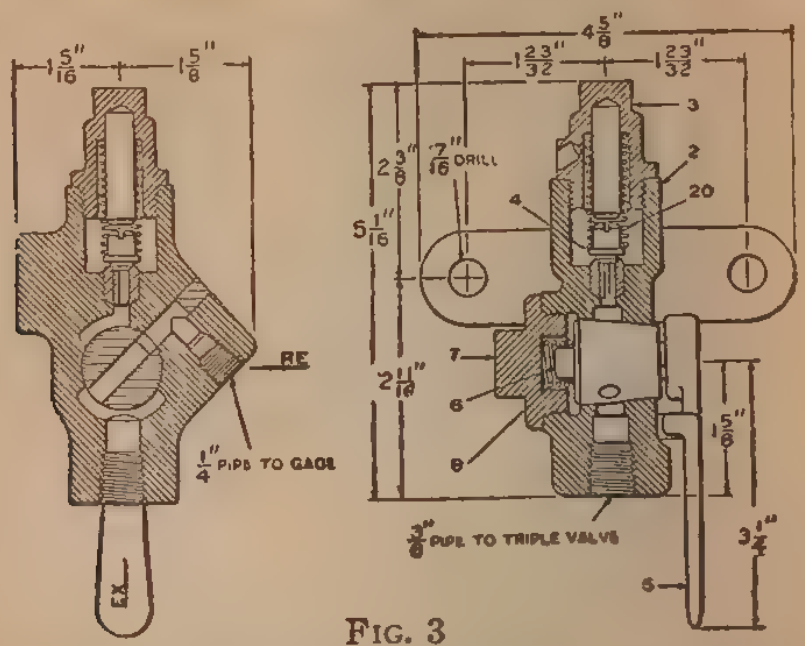

FIG. 3

ing valve will be furnished if specified with all single-cylinder freight equipments, but an additional charge is made for it.

SINGLE-PRESSURE, SPRING-TYPE FREIGHT RETAINING VALVES

Ref. No.	Size of cylinders, in...	8×12		10×12	
	Pressure retained, lb..	10	15	10	15
	Name of Part	Pc. No.	Pc. No.	Pc. No.	Pc. No.
	Valve, complete.....	44,889	44,888	44,886	44,885
2	Body.....	44,883	44,883	44,883	44,883
3	Cap nut (vented)....	43,449	43,449	43,451	43,451
4	Valve.....	42,130	42,130	42,130	42,130
5	Handle.....	43,554	43,554	43,554	43,554
6	Cock key.....	42,136	42,136	42,136	42,136
7	Cock-key cap.....	42,137	42,137	42,137	42,137
8	Cock-key spring.....	2,231	2,231	2,231	2,231
20	Spring.....	42,362	44,629	42,362	44,629

The double-pressure spring-type retaining valve is furnished when specified for use with all single-cylinder freight-brake equipments, but an additional charge is made for it. It is furnished regularly as a fundamental item with empty and load freight brake equipment. It may be applied to locomotives.

The single-pressure, spring-type, passenger retaining valve, Fig. 3, is of the non-vestibule type, the piece number of the vestibule type being 46,398. It is furnished for use with all passenger-car brake equipments without extra charge, if specified on the order.

DIMENSIONS OF RETAINING VALVE, FIG. 1

Size of Cylinder Used With, Inches	A In.	B In.	C In.	D In.	E In.	F In.	G In.	H In.
8–10–12	$1\frac{9}{16}$	$1\frac{1}{8}$	$2\frac{7}{8}$	$2\frac{3}{4}$	$5\frac{5}{8}$	$1\frac{3}{8}$	$\frac{3}{8}$ pipe	$\frac{3}{8}$ pipe
14–16–18	$1\frac{7}{8}$	$1\frac{3}{8}$	$3\frac{1}{8}$	$2\frac{7}{8}$	6	$1\frac{5}{8}$	$\frac{1}{2}$ pipe	$\frac{1}{2}$ pipe

Spring Identification, Retaining Valves

Pc. No.	Out. Dia. *A*, In.	Dia. Wire *B*, In.	Free Height *C*, In.	No. Coils	Material	Name of Spring
2 231	$\frac{5}{8}$	.091	$\frac{5}{8}$	$3\frac{1}{2}$	Brass	Key
42,362	$\frac{15}{32}$	.0356	2	17	Phosphor-bronze	Valve
44,628	$\frac{31}{64}$	.04	$2\frac{9}{16}$	29	Phosphor-bronze	Valve
44,629	$\frac{31}{64}$	.04	$2\frac{5}{32}$	29	Phosphor-bronze	Valve
45,265	$\frac{11}{16}$	.051	$3\frac{11}{32}$	$19\frac{1}{2}$	Phosphor-bronze	Valve
46,422	$\frac{45}{64}$	.057	$3\frac{7}{32}$	19	Phosphor-bronze	Valve
7,679	$\frac{5}{8}$	.091	$\frac{7}{8}$	5	Brass	Key

Retaining valves are packed in standard boxes, containing a definite number per box. The single-pressure spring type used with single-cylinder freight brake equipments, and the 15-C single-pressure weight type, come packed 100 to the box. All the others are packed 50 to the box. Ordering by standard boxes aids in handling, inventory, etc.

DOUBLE-PRESSURE, SPRING-TYPE, FREIGHT RETAINING VALVES

Ref. No.	Equipment	Single Cylinder Freight-Brake Equipments						Empty and Load Freight Brake	
	Size of cylinder, in.	8×12			10×12			8× 8 8×10 8×12	10× 8 10×10 10×12
	Pressure retained, lb.	10-20	15-30	25-50	10-20	15-30	25-50	10-20	10-20
	Name of Part	Piece Numbers							
	Valve, complete	43,452	46,408	51,566	43,453	45,048	50,255	43,691	43 692
2	Body	43,561	43,561	43,561	43,561	43,561	43,561	43,561	43 561
3	Cap nut	43,568	43,568	43,568	43,568	43,568	43,568	43,568	43 568
4	Valve	42,130	42,130	42,130	42,130	42,130	42,130	42,130	42 130
5	Handle	43,554	43,554	43,554	43,554	43,554	43,554	43,554	43 554
6	Cock key	42,136	42,136	42,136	42,136	42,136	42,136	42,136	42 136
7	Cock-key cap	42,137	42,137	42,137	42,137	42,137	42,137	42,137	42 137
8	Cock-key spring	2,231	2,231	2,231	2,231	2,231	2,231	2,231	2 231
20	Valve spring	42,362	42,362	42,362	42,362	42,362	42,362	42,362	42 362
21	Cap nut (vented)	43,449	43,449	43,499	43,451	43,451	43,451	43,682	43,684
22	Valve spring	42,362	44,629	44,628	42,362	44,629	44,629	42,362	42,362

Ref. No.	Size of cylinder, in.	8×12		10×12		12×12		14×12		16×12		18×12	
	Pressure retained, lb.	10	15	10	15	10	15	10	15	10	15	10	15
	Name of Part	Piece Numbers											
	Valve, complete	46,386	46,387	46,388	46,389	46,390	46,391	56,546	56,533	58,851	56,554	55,706	55,813
2	Body	48,804	48,804	48,804	48,804	48,804	48,804	54,853	54,853	54,853	54,853	54,853	54,853
3	Cap nut (ventilated)	45,448	45,448	45,449	45,449	45,450	45,450	45,266	45,266	45,272	45,272	45,451	45,451
4	Valve	45,264	45,264	45,264	45,264	45,264	45,264	45,264	45,264	45,264	45,264	45,264	45,264
5	Handle	46,480	46,480	46,480	46,480	46,480	46,480	46,480	46,480	46,480	46,480	46,480	46,480
6	Cock key	48,805	48,805	48,805	48,805	48,805	48,805	46,479	46,479	46,479	46,479	46,479	46,479
7	Cock cap	45,743	45,743	45,743	45,743	45,743	45,743	45,269	45,269	45,269	45,269	45,269	45,269
8	Key spring	7,679	7,679	7,679	7,679	7,679	7,679	7,679	7,679	7,679	7,679	7,679	7,679
20	Valve spring	45,265	46,422	45,265	46,422	45,265	46,422	45,265	46,422	45,265	46,422	45,265	46,422

SAFETY VALVES

TYPES OF AIR-BRAKE SAFETY VALVES

Four types of air-brake safety valves are made; viz., E-1 and E-6, which weigh 3 lb., and E-3 and E-7, which weigh $3\frac{1}{2}$ lb. While types E-1 and E-3 are designed for air-brake service, they can be used for any service where a high-grade, air-pressure, safety valve is required. However, the ranges of pressures given must not be departed from, as they cover the limits under which satisfactory operation can be obtained

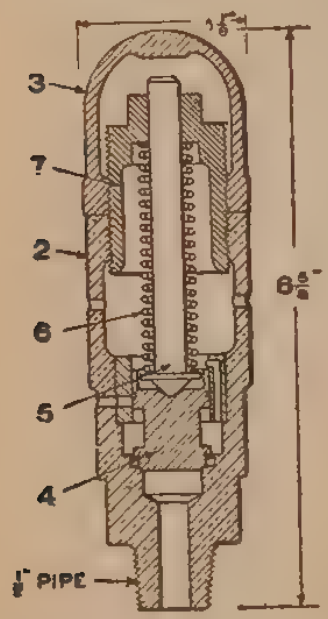

FIG. 1

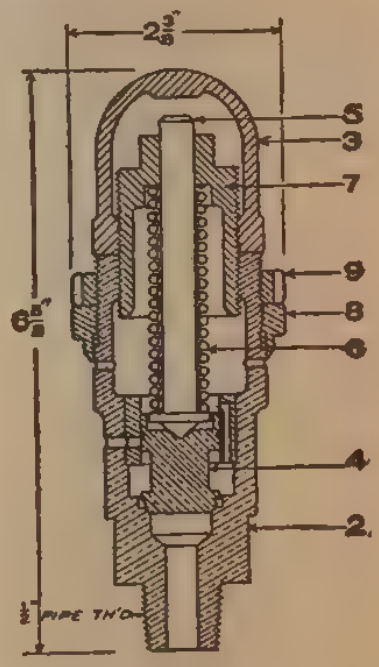

FIG. 2

from the different springs. The pressure range for which the valve is adapted is now stamped on the hexagon portion of the body. The E-1 safety valve, shown in Fig. 1, is suitable for general service where a high-grade, air-pressure, safety valve is required, except where it is necessary to have a close or adjustable range between the opening and closing points of the safety valve, in which case the type E-3 should be used.

The E-1 safety valve, which has a range from 35 lb. to 75 lb., Piece No. 10,526, is the valve most commonly used with driver- and tender-brake cylinders, in connection with schedules SWA, SWB, and U; on passenger cars temporarily used in trains equipped with high-speed brakes; and with No. 5 distributing valve.

The E-3 safety valve, shown in Fig. 2, is provided with an adjustable exhaust regulating ring, by means of which the *drop*, or range between the opening and closing points of the

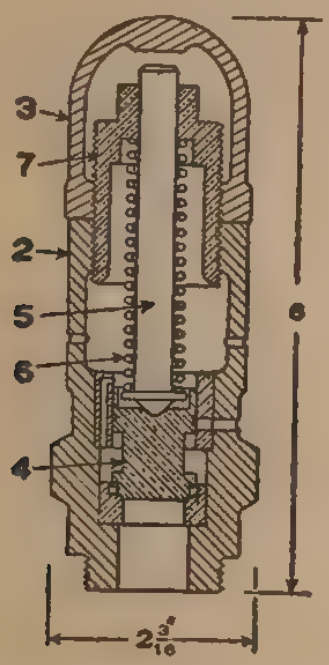

FIG. 3

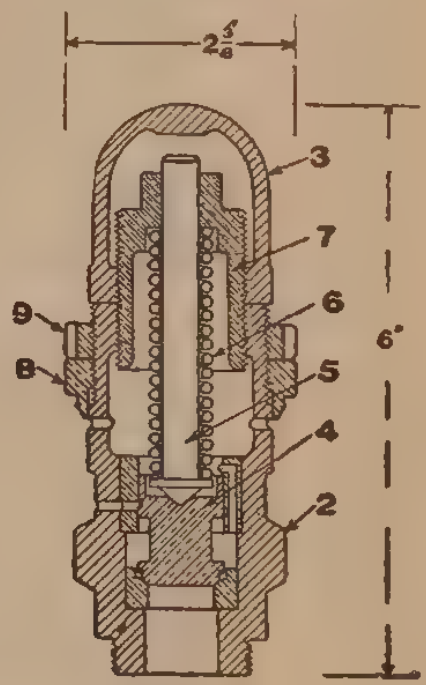

FIG. 4

safety valve, can be adjusted to any desired amount. It is, therefore, particularly adapted for use where it is desirable to keep this range at any given amount, large or small.

The E-6 safety valve, shown in Fig. 3, is a special valve not used for general purposes. It is a part of and is regularly supplied with the No. 6 distributing valve.

The E-7 safety valve, shown in Fig. 4, is a special valve, and not used for general purposes. It is a part of, and is regularly supplied with, type L triple valves.

The piece and reference numbers of the different types of valves, and of the various parts of each, are given in the accompanying lists.

Type E-1 Safety Valves

Pc. No.	Ref. No.	Name of Part
28,487		Type E-1 safety valve, 5 lb. to 25 lb.
18,598		Type E-1 safety valve, 10 lb. to 40 lb.
10,526		Type E-1 safety valve, 35 lb. to 75 lb.
24,106		Type E-1 safety valve, 60 lb. to 100 lb.
24,107		Type E-1 safety valve, 80 lb. to 130 lb.
24,108		Type E-1 safety valve, 110 lb. to 150 lb.
10,528	2	Body, bushed.
9,029	3	Cap nut.
10,524	4	Valve.
10,523	5	Valve stem.
18,286	6	Spring, 5 lb. to 25 lb.
18,414	6	Spring, 10 lb. to 40 lb.
1,498	6	Spring, 35 lb. to 75 lb.
3,639	6	Spring, 60 lb. to 100 lb.
24,112	6	Spring, 80 lb. to 130 lb.
13,434	6	Spring, 110 lb. to 150 lb.
9,030	7	Regulating nut.

Type E-3 Safety Valves

Pc. No.	Ref. No.	Name of Part
24,109		Type E-3 safety valve, 50 lb. to 90 lb.
24,110		Type E-3 safety valve, 80 lb. to 130 lb.
12,705		Type E-3 safety valve, 110 lb. to 150 lb.
24,111		Type E-3 safety valve, 140 lb. to 225 lb.
15,494		Type E-3 safety valve, 210 lb. to 325 lb.
26,079		Type E-3 safety valve, 300 lb. to 400 lb.
12,795	2	Body, bushed.
9,029	3	Cap nut.
10,524	4	Valve.
10,523	5	Valve stem.
24,113	6	Spring, 50 lb. to 90 lb.
24,112	6	Spring, 80 lb. to 130 lb.
13,434	6	Spring, 110 lb. to 150 lb.
24,114	6	Spring, 140 lb. to 225 lb.
12,490	6	Spring, 210 lb. to 325 lb.
26,078	6	Spring, 300 lb. to 400 lb.
9,030	7	Regulating nut.
12,797	8	Exhaust-regulating ring.
12,798	9	Lock-ring.

Type E-6 Safety Valve

Pc. No.	Ref. No.	Name of Part
15,890		E-6 safety valve, 50 lb. to 90 lb complete.
15,554	2	Body, bushed.
9,029	3	Cap nut.
10,524	4	Valve.
10,523	5	Valve stem.
24,113	6	Spring, 50 lb. to 90 lb.
16,087	7	Regulating nut.

TYPE E-7 SAFETY VALVE

Pc. No.	*Ref. No.*	*Name of Part*
15,549		E-7 safety valve, 35 lb. to 75 lb., complete.
15,538	2	Body, bushed.
9,029	3	Cap nut.
10,524	4	Valve.
10,523	5	Valve stem.
3,639	6	Spring, 60 lb. to 100 lb.
16,087	7	Regulating nut.
12,797	8	Exhaust-regulating ring.
12,798	9	Lock-ring.

Spring Identification, Safety Valves

Pc. No.	Out. Dia. *A*, In.	Dia. Wire *B*, In.	Free Height *C*, In.	No. Coils	Type	Range of Pressure Lb.
18,286	$\frac{19}{32}$	.072	$2\frac{21}{32}$	15	E-1	5 to 25
18,414	$\frac{9}{16}$	.080	$2\frac{11}{16}$	14	E-1	10 to 40
1,498	$\frac{5}{8}$	.095	$3\frac{1}{4}$	20	E-1	35 to 75
3,639	$\frac{23}{32}$	.109	$3\frac{1}{4}$	$18\frac{1}{2}$	E-1 and E-7	60 to 100
24,112	$\frac{21}{32}$	.121	$3\frac{3}{16}$	17	E-1	80 to 130
13,434	$\frac{21}{32}$	.121	$3\frac{1}{4}$	17	E-1	110 to 150
24,113	$\frac{41}{64}$	.106	$2\frac{15}{16}$	$15\frac{1}{2}$	E-3 and E-6	50 to 90
24,112	$\frac{21}{32}$	.121	$3\frac{3}{16}$	17	E-3	80 to 130
13,434	$\frac{21}{32}$	.121	$3\frac{1}{4}$	17	E-3	110 to 150
24,114	$\frac{11}{16}$	.135	$3\frac{3}{16}$	$15\frac{1}{2}$	E-3	140 to 225
12,490	$\frac{11}{16}$	.148	$3\frac{19}{64}$	$16\frac{1}{2}$	E-3	210 to 325
26,078	$\frac{3}{4}$	.162	$3\frac{1}{8}$	$13\frac{1}{2}$	E-3	300 to 400

Material of all springs, nickeled steel

OPERATION OF SAFETY VALVES

The safety valve operates as follows: Air enters the safety valve and exerts an upward pressure on the under side of the valve *4*. When the pressure underneath the valve slightly exceeds the tension of the adjusting spring *6*, the valve *4* is raised, and, as it rises, a larger area is exposed to the air pressure, which then causes it to move upwards quickly until the stem strikes the cap nut *3*. During this movement, the upper end of the two vertical ports in the valve bushing are closed by

the valve *4* and the horizontal ports in the bushing and the body *2* are opened. This allows air from the valve chamber to pass to the atmosphere, and as the pressure in this chamber decreases, the adjusting spring moves the valve *4* down toward its seat. During this movement, the horizontal ports are closed and the upper end of the vertical ports in the valve bushing are opened. This allows air from the valve chamber to pass into the chamber above valve *4*, from which place it can escape to the atmosphere through the vent ports in the valve body. The air from the valve chamber can pass into the upper chamber through the vertical ports in the bushing faster than the air can escape from this chamber to the atmosphere through the vent ports. This causes a pressure to accumulate above valve *4* and assists the spring *6* in closing the valve with a pop action.

The promptness with which valve *4* will close depends, to a certain extent, on the rate at which air can escape through the vent ports in the body *2* and the rate of discharge of air through these ports can be regulated by the exhaust-regulating ring *8*, which is locked in position by the lock-ring *9*.

HIGH-SPEED REDUCING VALVE

PIECE AND REFERENCE NUMBERS

The high-speed reducing valve, shown in the accompanying illustration, is made in five sizes for use with 8-in., 10-in., 12-in., 14-in., 16-in., and 18-in. cylinders, hence care must be observed to use the proper size valve for the brake cylinder. The weight is 35 lb.

Pc. No.	*Ref. No.*	*Name of Part*
4,128		Reducing valve, complete, for 8-in. cylinder.
11,176		Reducing valve, complete, for 10-in. cylinder.
3,712		Reducing valve, complete, for 12-in. cylinder.
11,275		Reducing valve, complete, for 14-in. cylinder.
3,711		Reducing valve, complete, for 16-in. and 18-in. cylinder.

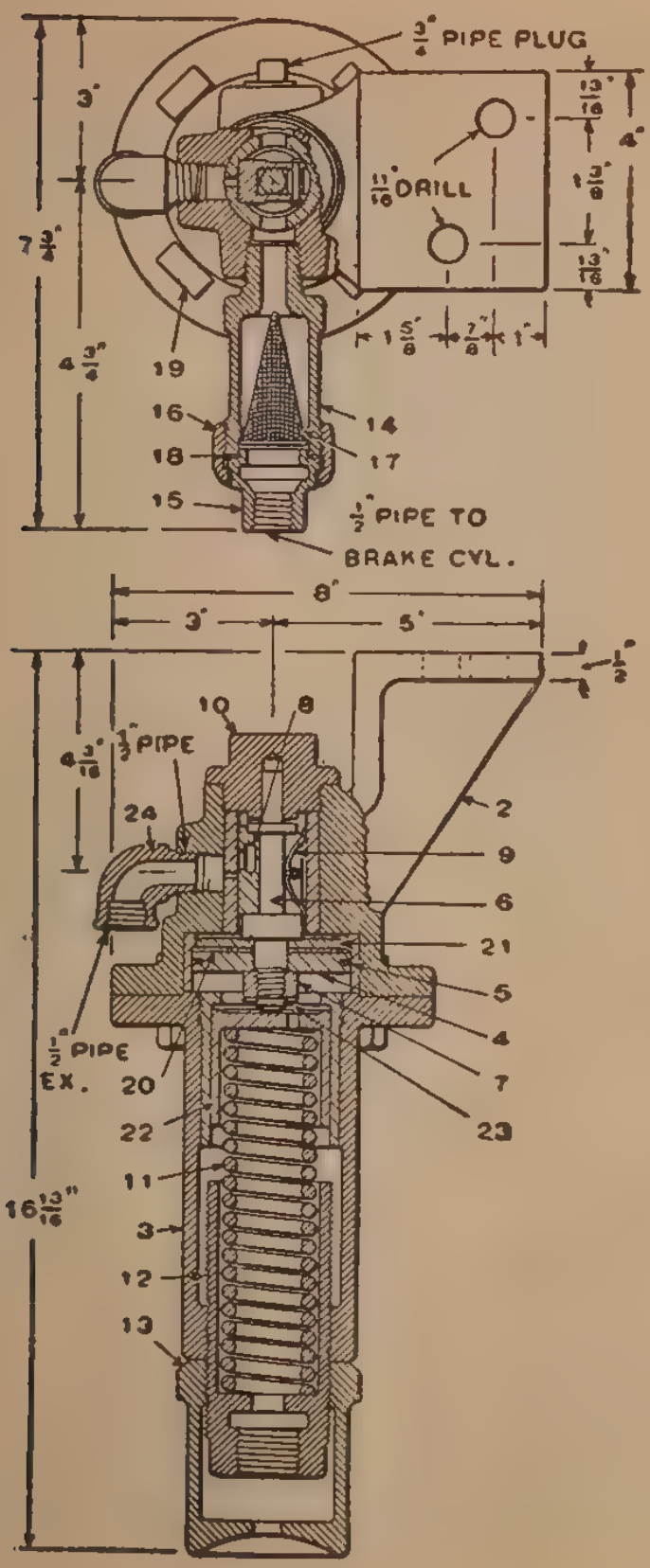
3/4" PIPE PLUG
13/16"
4"
1 3/8"
13/16"
11/16" DRILL
1 5/8"
7/8"
1"
3"
7 3/4"
4 3/4"
19
16
18
15
14
17
1/2" PIPE TO
BRAKE CYL.
8"
3"
5"
1/2"
10
8
4 3/16"
1/2" PIPE
24
2
9
6
21
5
4
7
23
1/2" PIPE
EX.
20
22
11
16 13/16"
3
12
13

FIG. 1

PARTS COMMON TO ALL VALVES

Pc. No.	*Ref. No.*	*Name of Part*
	2	Body, bushed.
2,402	3	Spring box, bushed.
2,392	4	Piston, includes 5.
10,030	5	Piston ring.
2,396	6	Piston stem.
2,397	7	Piston-stem nut.
	8	Slide valve.
2,400	9	Slide-valve spring.
2,401	10	Cap nut.
2,406	11	Regulating spring.
2,407	12	Regulating nut.
7,094	13	Check-nut.
2,410	14	Union stud.
2,412	15	Union swivel.
1,749	16	Union nut.
2,411	17	Air strainer.
1,755	18	Union gasket.
5,198	19	Bolt and nut.
2,394	20	Piston seat.
2,395	21	Piston disk.
2,405	22	Spring abutment.
3,942	23	Cotter.
13,225	24	½-in. street L.
2,202	25	¾-in. pipe plug.

PARTS NOT COMMON TO ALL VALVES, BUT TO BE ORDERED AS NOTED

Ref. No.	Name of Part	Piece Number When Used With				
		8-In. Cyl.	10-In. Cyl.	12-In. Cyl.	14-In. Cyl.	16-In. and 18-In. Cyl.
2	Body.....	4,124	11,124	3,349	11,128	3,346
8	Slide valve..	4,125	4,125	3,351	11,129	3,347

Spring Identification, H-S Reducing Valve

Pc. No.	Out. Dia. *A*, In.	Dia. Wire *B*, In.	Free Height *C*, In.	No. Coils	Material	Name of Spring
2,406	1¾	9/32	9¾	19½	Steel	Regulating

OPERATION OF REDUCING VALVE

The slide-valve seat in the body bush has a long narrow port (which will be designated *a*) extending crosswise with the slide valve *8*. The slide valve has a triangular-shaped port (which will be designated *b*) with its apex pointing toward the cap nut *10*. In release position of the reducing valve, port *b* is above port *a*.

As long as the cylinder pressure remains less than 60 lb. per sq. in., the reducing valve plays no part in an ordinary service application of the brake, the valve remaining in its normal position, with port *a* blanked. Suppose, that in making a service application, the brake-cylinder pressure should increase above 60 lb.; the pressure above the piston *4* will be sufficient to compress the regulating spring, and the piston and slide valve will be forced downwards until the base, or largest part of port *b*, registers with port *a*. In this position, brake-cylinder air is free to flow to the atmosphere through the exhaust fitting *24* until the pressure is reduced to 60 lb., when the regulating spring forces the piston and slide valve upwards into their normal positions again.

In an emergency application of the brake, air enters the brake cylinder from the train pipe and auxiliary reservoir in much greater volume than it could possibly escape through the ports *a* and *b* of the reducing valve; hence, piston *4* of the latter is forced downwards the full length of its stroke, and assumes a position such that the apex of the triangular port *b* registers with port *a*. In this position, the passage through ports *a* and *b* is small and air discharges quite slowly from the cylinder. As the pressure in the cylinder, and consequently above piston *4*, gradually decreases, due to the discharge through ports *a* and *b*, the regulating spring gradually raises the piston and slide valve, and, as the slide valve is raised, the opening through ports *a* and *b* gradually increases; consequently, the discharge from the cylinder increases accordingly until the brake-cylinder pressure is reduced to a safe amount (60 lb.), when the reducing valve assumes its normal position, covering the opening *a* so that no more air can escape from the brake cylinder until brakes are released.

CENTRIFUGAL DIRT COLLECTORS

The centrifugal dirt collector, which is shown in Fig. 1, supersedes the brake-pipe air strainer and is now regularly furnished as a part of the standard air-brake equipments. When included with full sets, no extra charge is made. The collector is made in three sizes, $\frac{3}{4}$-in., 1 in., and $1\frac{1}{4}$ in. The $\frac{3}{4}$-in. collector, Piece No. 32,342, is used on locomotives; the 1-in., Piece No. 27,950, is used on passenger cars; and the $1\frac{1}{4}$-in., Piece No. 31,802, is used on freight cars. The dimensions and weights are given in the accompanying table, and piece and reference numbers of the different sizes, and of the various parts of each, are given in the accompanying list.

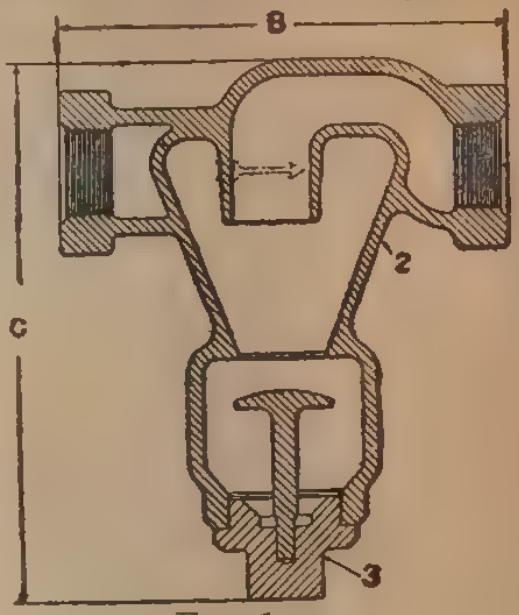

FIG. 1

DIMENSIONS AND WEIGHTS OF CENTRIFUGAL DIRT COLLECTOR

Size Inches	Width Inches	Length B Inches	Length C Inches	Weight Pounds
$\frac{3}{4}$	$4\frac{3}{8}$	7	$8\frac{13}{16}$	$8\frac{1}{2}$
1	$4\frac{3}{8}$	$7\frac{1}{2}$	$9\frac{1}{16}$	9
$1\frac{1}{4}$	$4\frac{3}{8}$	$7\frac{5}{8}$	$9\frac{1}{16}$	$9\frac{1}{2}$

$\frac{3}{4}$-IN. CENTRIFUGAL DIRT COLLECTOR

Pc. No.	*Ref. No.*	*Name of Part*
36,452		$\frac{3}{4}$-in. centrifugal dirt collector complete.
36,451	2	Body.
36,450	3	Deflector and plug.

1-In. Centrifugal Dirt Collector

Pc. No.	Ref. No.	Name of Part
36,454		1-in. centrifugal dirt collector, complete.
36,453	2	Body.
36,450	3	Deflector and special plug.

1¼-In. Centrifugal Dirt Collector

Pc. No.	Ref. No.	Name of Part
36,456		1¼-in. centrifugal dirt collector, complete.
36,455	2	Body.
36,450	3	Deflector and special plug.

With the brake-pipe strainer, there is a tendency for dirt and foreign matter to clog the strainer, thereby restricting the flow of air through it, which frequently results in imperfect operation of the brakes; also, to clean the brake-pipe strainer,

Fig. 2

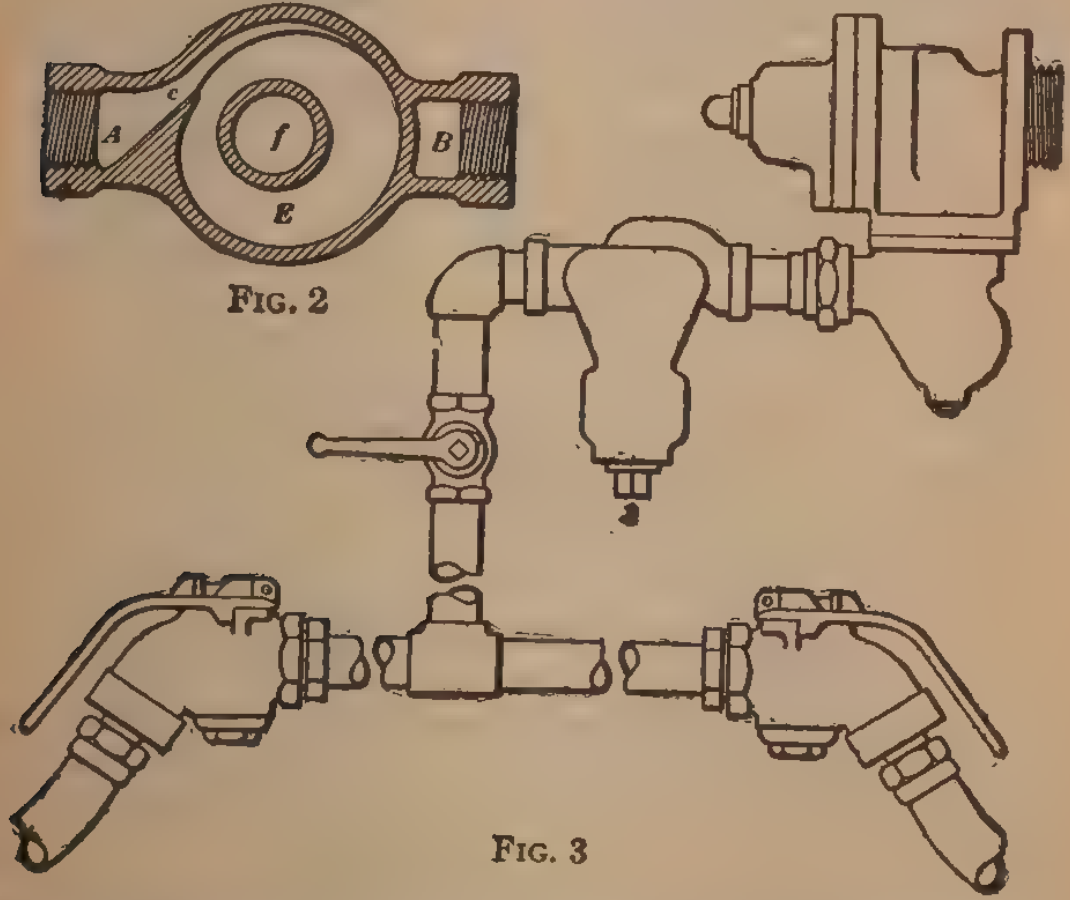

Fig. 3

the pipe connections must be broken. With the centrifugal dirt collector no strainer is used; hence, the air passage through it remains free and unrestricted at all times. Dirt and foreign matter drop to the bottom of the chamber and can be quickly removed without disturbing any pipe connections. A good

idea of the internal construction and the operation of the centrifugal dirt collector can be obtained from the horizontal section shown in Fig. 2. Air from the brake pipe, on its way to the triple valve, enters at *A*, passes through the passage *c*, into the chamber *E*, thence up passage *f*, and out at *B*. The air on its way through the passage *c* receives a whirling motion when it enters chamber *E*, which tends to cause any foreign matter in the air to be carried close to the walls of the chamber. Then, as the air is compelled to rise in order to escape through passage *f*, the foreign matter drops to the bottom of the collector whence it can be removed by unscrewing the special plug *3*. In Fig. 3 is shown the application of the centrifugal dirt collector to a car.

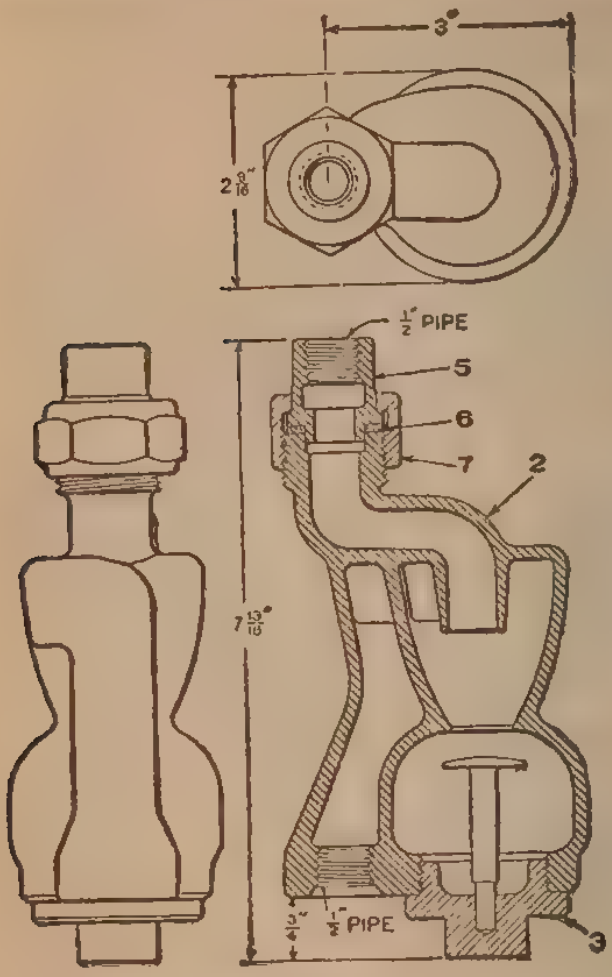

FIG. 4

The ½-in. vertical centrifugal dirt collector, Fig. 4, is recommended for use with electric locomotive brake equipments to protect the feed-valve and reducing valve. It is furnished only when specially ordered, and an additional charge is made for it.

Pc. No.	*Ref. No.*	*Name of Part*
56,483		½-in. centrifugal dirt collector, complete.
56,486	2	Body.
56,484	3	Deflector and plug.
2,166	5	½-in. union swivel.
2,204	6	½-in. union gasket.
2,165	7	½-in. union nut.

AIR STRAINERS

BRAKE-PIPE STRAINERS

Two sizes of brake-pipe strainers, shown in Fig. 1, are made. The 1-in. strainer was formerly furnished with locomotive and passenger-car brake equipments. The $1\frac{1}{4}$ in. was formerly furnished with freight-car brake equipments, also with locomotive brake equipments when $1\frac{1}{4}$-in. brake pipe was specified.

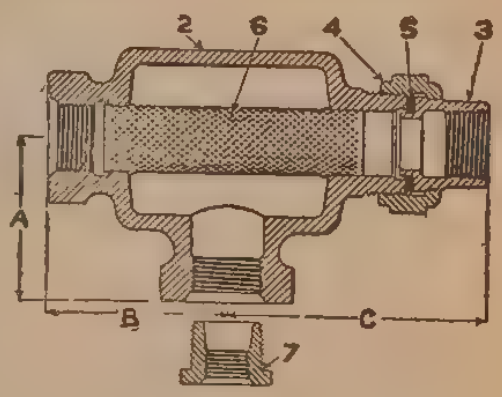

FIG. 1

To meet special conditions, a pattern is provided for a $1\frac{1}{4}'' \times 1\frac{1}{4}'' \times \frac{3}{4}''$ brake-pipe strainer, Piece No. 6,141, to avoid the cumbersome appearance of the standard $1\frac{1}{4}$-in. strainer, Piece No. 2,151, if bushed. Piece No. 6,141 will be made up and supplied only as ordered and can be furnished with $\frac{3}{4}$-in. side opening bushed to $\frac{1}{2}$ in. (Piece No. 6,145) or to $\frac{3}{8}$ in. (Piece No. 11,496) if desired. Repair parts for these special strainers are the same as for the standard, except body, Piece No. 6,142, for the $1\frac{1}{4}'' \times 1\frac{1}{4}'' \times \frac{3}{4}''$ strainer, and bushings, $\frac{3}{4}'' \times \frac{1}{2}''$, Piece No. 9,332, and $\frac{3}{4}'' \times \frac{3}{8}''$, Piece No. 10,089.

If desired to have side opening bushed for smaller than 1-in. pipe, orders should so state and specify as follows: $1'' \times 1'' \times \frac{3}{4}''$ brake-pipe strainer, Piece No. 4,989; $1'' \times 1'' \times \frac{1}{2}''$ brake-pipe strainer, Piece No. 2,179; or $1'' \times 1'' \times \frac{3}{8}''$ brake-pipe strainer, Piece No. 10,039. Repair parts for these strainers are the same as for the standard, except bushings, $1'' \times \frac{3}{4}''$, Piece No. 6,983, $1'' \times \frac{1}{2}''$, Piece No. 2,181, and $1'' \times \frac{3}{8}''$, Piece No. 10,045.

The dimensions and weights of each size are given in the accompanying table; the piece and reference numbers of the strainers and their various parts are given in the accompanying lists.

DIMENSIONS AND WEIGHTS OF BRAKE-PIPE STRAINERS

Size Inches	Length of *A* Inches	Length of *B* Inches	Length of *C* Inches	Weight Pounds
$1\frac{1}{4}$	$2\frac{7}{8}$	$3\frac{1}{4}$	$4\frac{5}{8}$	$7\frac{1}{2}$
1	$2\frac{15}{16}$	$3\frac{1}{4}$	$4\frac{5}{8}$	6

1-In. Brake-Pipe Strainers

Pc. No.	*Ref. No.*	*Name of Part*
2,148		1″×1″×1″ brake-pipe strainer, complete.
2,180	2	1″×1″×1″ strainer body, includes 6.
1,750	3	1-in. union swivel.
1,749	4	1-in. union nut.
1,755	5	1-in. union gasket.
2,150	6	Strainer.

$1\frac{1}{4}$-In. Brake-Pipe Strainers

Pc. No.	*Ref. No.*	*Name of Part*
2,151		$1\frac{1}{4}''\times1\frac{1}{4}''\times1\frac{1}{4}''$ brake-pipe strainer, complete.
2,182	2	$1\frac{1}{4}''\times1\frac{1}{4}''\times1\frac{1}{4}''$ strainer body, includes 6.
2,155	3	$1\frac{1}{4}$-in. union swivel.
2,154	4	$1\frac{1}{4}$-in. union nut.
2,183	5	$1\frac{1}{4}$-in. union gasket.
2,153	6	Strainer.

C STRAINER AND CHECK-VALVE

The C strainer and check-valve, shown below, is now superseding the B-2 types. Type C-1-3-6 is used with schedule

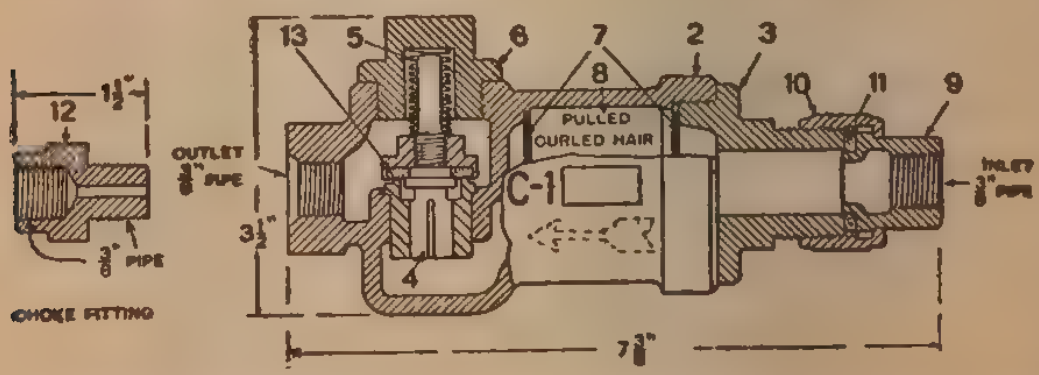

L air-signal equipment for locomotives having No. 6 ET brake equipment; it weighs $3\frac{3}{4}$ lb.

Pc. No.	Ref. No.	Name of Part
24,899		C-1-3-6 strainer and check-valve, complete.
25,908	2	Body, bushed.
14,661	3	Cap nut.
25,909	4	Check-valve.
25,921	5	3-lb. valve spring.
24,893	6	Valve cap.
1,044	7	Strainer (2 pieces) each.
	8	Curled hair.
14,204	9	Union swivel.
2,165	10	Union nut.
2,204	11	Union gasket.
15,473	12	Choke plug with $\frac{3}{32}$-in. hole.
25,788	13	Leather seat.

Type C-1-20-8 strainer and check-valve is used with dead engine fixtures, No. 6 ET equipment; it weighs $3\frac{1}{4}$ lb.

Pc. No.	Ref. No.	Name of Part
24,898		C-1-20-8 strainer and check-valve, complete.
25,908	2	Body, bushed.
14,661	3	Cap nut.
25,909	4	Check-valve.
25,920	5	20-lb. valve spring.
24,893	6	Valve cap.
1,044	7	Strainer (2 pieces) each.
	8	Curled hair.
14,294	9	Union swivel.
2,165	10	Union nut.
2,204	11	Union gasket.
25,906	12	Choke plug with $\frac{1}{8}$-in. hole.
25,788	13	Leather seat.

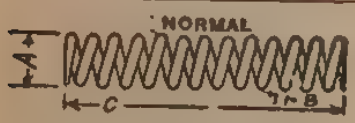

Spring Identification, Strainer and Check-Valves

Pc. No.	Out. Dia. *A*, In.	Dia. Wire *B*, In.	Free Height *C*, In.	No. Coils	Material	Type
25,921	$\frac{15}{32}$	.0403	$1\frac{3}{4}$	15	Phosphor-Bronze	C-1-3-6
25,920	$\frac{1}{2}$	.072	$1\frac{5}{16}$	10	Phosphor-Bronze	C-1-20-8

SIGNAL-PIPE STRAINER

The signal-pipe strainer, shown herewith, is furnished with schedule K, passenger-car, air-signal equipments; it weighs $1\frac{1}{2}$ lb. The piece and reference numbers of the strainer and its parts are given in the accompanying list.

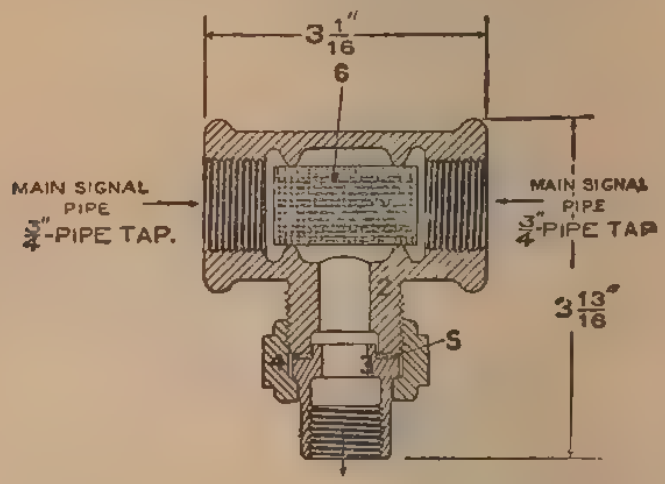

Pc. No.	*Ref. No.*	*Name of Part*
2,240		$\frac{3}{4}'' \times \frac{3}{4}'' \times \frac{1}{2}''$ signal pipe strainer, complete.
2,497	2	Strainer body, includes 6.
2,166	3	$\frac{1}{2}$-in. union swivel.
2,165	4	$\frac{1}{2}$-in. union nut.
2,204	5	$\frac{1}{2}$-in. union gasket.
2,242	6	Strainer.

$\frac{3}{8}$-IN. AIR STRAINER

The $\frac{3}{8}$-in. air strainer, shown below, is furnished with schedule J, locomotive air-signal equipments; it weighs $1\frac{5}{8}$ lb. The piece and reference numbers of the strainer and its parts are given in the accompanying list.

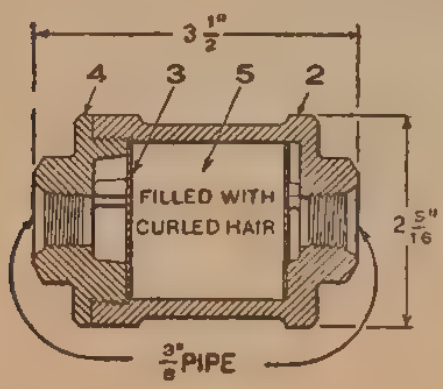

Pc. No.	*Ref. No.*	*Name of Part*
3,272		$\frac{3}{8}$-in. air strainer, complete.
3,273	2	Body.
1,044	3	Strainer (2 pieces), each.
3,274	4	Cap.
	5	Curled hair.

1-IN. BRANCH-PIPE STRAINER

The 1-in. air branch-pipe strainer, shown below, is used in connection with pipeless triple valves; it weighs 1½ lb. The piece and reference numbers of the strainer and its parts are given in the accompanying list.

Pc. No.	*Ref. No.*	*Name of Part*
9,523		1-in. branch-pipe strainer, complete.
9,522	2	Body.
2,411	3	Strainer.
1,749	4	1-in. union nut.
1,750	5	1-in. union swivel.
1,755	6	1-in. union gasket.

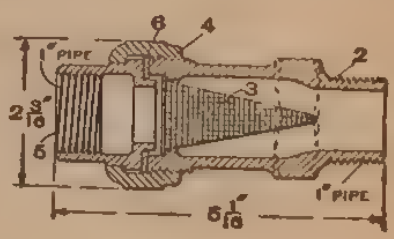

CONDUCTOR'S VALVES

B-3-A CONDUCTOR'S VALVE

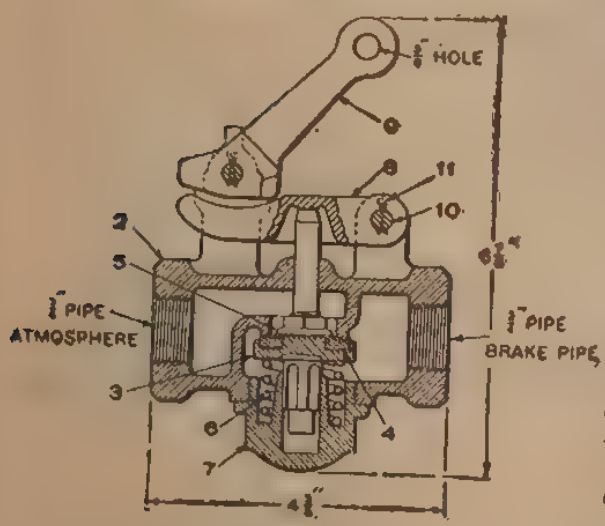

FIG. 1

The B-3-A conductor's valve, Fig. 1, is tapped for ¾-in. pipe, is of the non-self-closing poppet-valve type, which, when opened, must be closed by hand. Its weight is 4 lb. This valve is standard, and is regularly supplied with complete passenger-car brake equipments unless otherwise specified on orders. The piece and reference numbers of the valve and its parts are given in the accompanying list.

Pc. No.	*Ref. No.*	*Name of Part*
51,497		B-3-A conductor's valve, complete.
51,539	2	Body.
1,735	3	Vent valve, complete, includes 4 and 5.
1,737	4	Rubber seat.
1,738	5	Valve nut.

Pc. No.	*Ref. No.*	*Name of Part*
7,448	6	Valve spring.
51,550	7	Cap.
13,574	8	Valve lever.
13,575	9	Operating lever.
13,576	10	Rivet.
2,958	11	Cotter.

C-3 CONDUCTOR'S VALVE

The C-3 conductor's valve, which is shown herewith and is tapped for ¾-in. pipe, is of the non-self-closing type; it is the standard furnished with all wooden passenger-car brake equip-

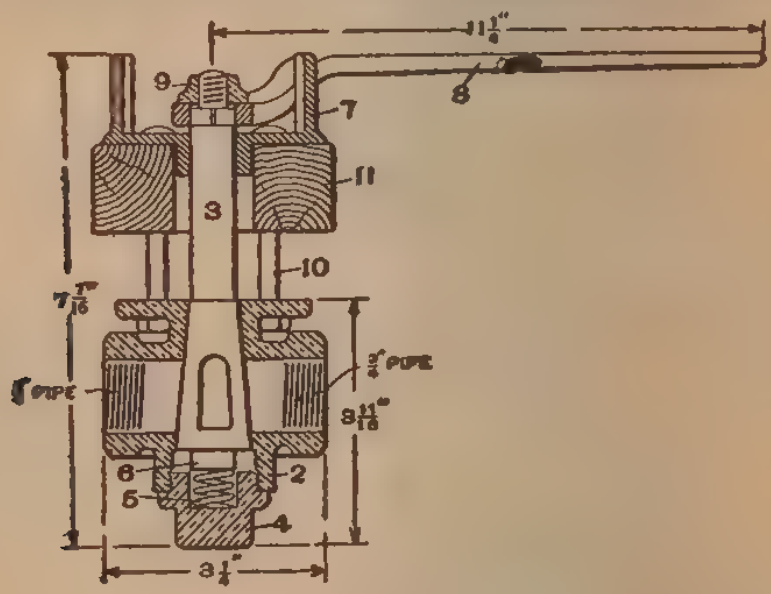

FIG. 1

ments unless otherwise specified. Its weight is 4¾ lb. The piece and reference numbers of the valve and its parts are given in the accompanying list.

Pc. No.	*Ref. No.*	*Name of Part*
14,436		C-3 conductor's valve, complete.
14,428	2	Body.
2,143	3	Key.
2,144	4	Cap.
2,145	5	Key spring.
2,069	6	Key stop.
14,384	7	Key escutcheon.
2,107	8	Handle.
2,147	9	Key nut.
14,716	10	Bolt and nut, ¼ in.×3 in.
14,385	11	Filler block.

C-3 CONDUCTOR'S VALVE

The C-3 conductor's valve, Fig. 2, is of the non-self-closing plug-cock type, designed for use on steel passenger cars when

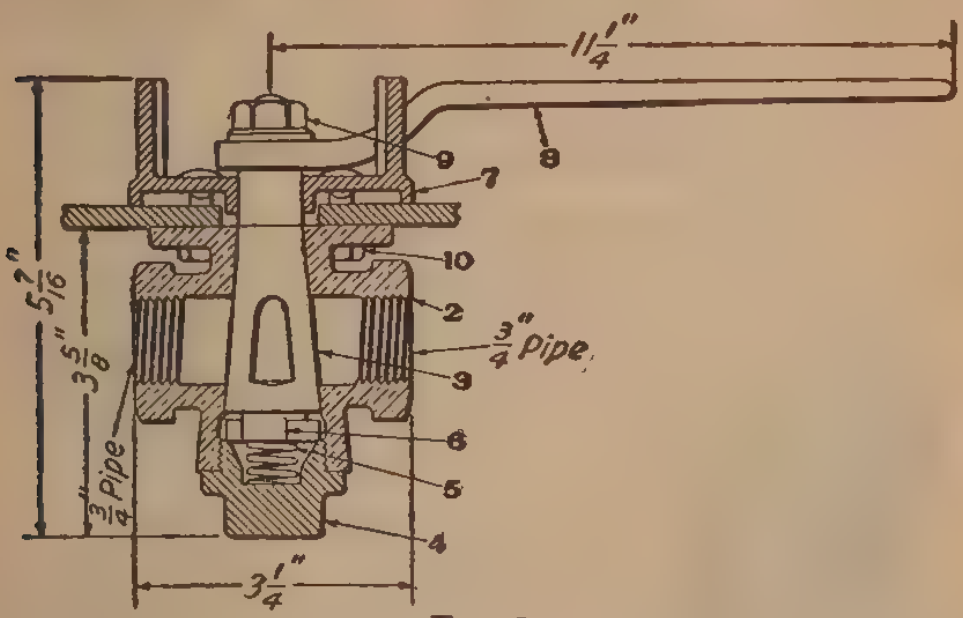

FIG. 2

partitions are thin. It is furnished only on special order. Net weight, 4½ lb.

Pc. No.	*Ref. No.*	*Name of Part*
43,804		C-3 conductor's valve, complete.
14,428	2	Body.
29,181	3	Key.
2,144	4	Cap nut.
2,145	5	Key spring.
2,069	6	Key stop.
44,255	7	Key escutcheon.
2,107	8	Handle.
2,147	9	Key nut.
44,276	10	Bolt and nut.

OPERATION OF CONDUCTOR'S VALVE

The conductor's valve is connected to the brake pipe by means of a branch pipe, and when open makes a direct passage from the brake pipe to the atmosphere. The valve is intended to be used only in case of emergency. It should be opened wide and held open until the train comes to a stop, for if allowed to close and the engineer's brake valve is in running position, the brakes will be released again.

HOSE, COUPLINGS, AND FITTINGS

STANDARD FITTINGS

The M. C. B. code of rules governing the condition of, and repairs to, freight cars for interchange traffic; and the appendix on same covering passenger cars (as revised June, 1911, and taking effect Sept. 1, 1911), make the $1\frac{3}{8}'' \times 22''$ air-brake hose and couplings standard for both freight- and passenger-brake equipment, instead of the $1\frac{1}{8}'' \times 22''$ hose and couplings formerly standard. The interchange rules do not change the size of signal hose, the standard still being $1\frac{1}{8}'' \times 22''$. The revised rules do not change hose for locomotives, which remain $1\frac{1}{8}'' \times 22''$, although $1\frac{3}{8}'' \times 22''$ hose and couplings may be used if desired.

FIG. 1

Hose couplings are designated by two letters and a figure, as FP-5, HP-4, etc. The first letter indicates the group of couplings that can be coupled together. That is, all couplings of group F will couple together, but they will not couple with those of group H. The second letter indicates the style of coupling, all P couplings being of the same style. The figure indicates the size of the hose or pipe, in quarters of an inch; a 5 hose is $5 \times \frac{1}{4}$ or $1\frac{1}{4}$-in. hose; a 4 hose is a 1-in. hose.

Nipples are designated by two dimensions, as $1\frac{3}{8}'' \times 1\frac{1}{4}''$ nipple. The first dimension is the inside diameter of the hose for which the nipple is intended; the second dimension is the size of the pipe. A cross-section of hose, showing its construc-

tion, is shown in Fig. 1; in Fig. 2 is a diagrammatic view of the FP coupling.

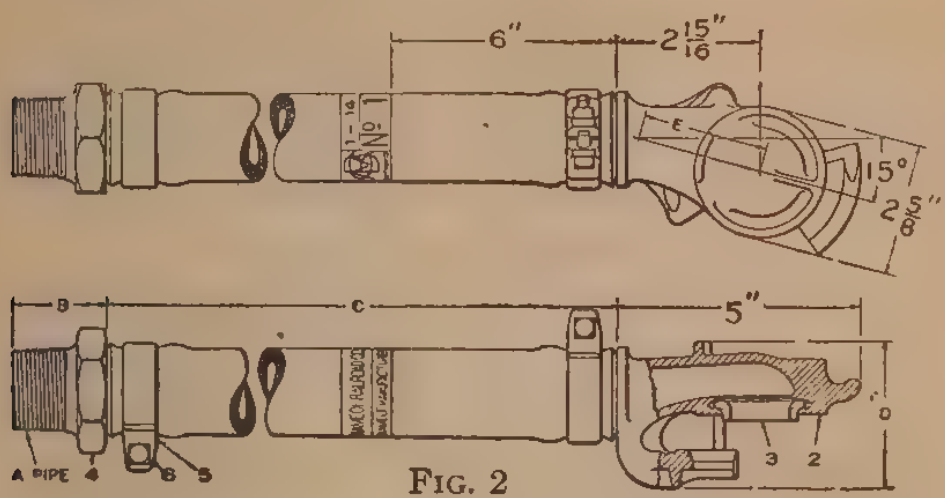

FIG. 2

The old standard coupling having a stop lug has been abandoned, and the present standard is an improved form of the old stop-pin coupling. The improvement consists in an increase in the cross-section of metal through the stop-pin end of the guard arm, which is intended to do away with breakage of the guard arm through the stop-pin hole. The galvanized

DIMENSIONS OF HOSE AND COUPLERS

Pc. No.	Dia. of Hose Inches	Size of Nipple A Inches	Dimensions, in Inches			
			B	C	D	E
46,242	$1\frac{3}{8}$	$1\frac{1}{4}$	$1\frac{29}{32}$	22	$3\frac{1}{2}$	$2\frac{5}{8}$
46,283	$1\frac{1}{8}$	$1\frac{1}{4}$	$1\frac{13}{16}$	22	$2\frac{15}{16}$	$2\frac{1}{2}$
46,252	$1\frac{1}{8}$	$\frac{3}{4}$	$1\frac{1}{2}$	22	$2\frac{7}{8}$	$2\frac{1}{2}$

annealed steel hose clamp is now practically established as standard.

HOSE AND COUPLINGS

HOSE AND FP-5 COUPLING

The hose and FP-5 coupling is the standard for brake-pipe connections on both passenger and freight cars; it is also furnished, when ordered, for locomotives having $1\frac{1}{4}$-in piping. The piece and reference numbers are given in the accompanying list.

Pc. No.	*Ref. No.*	*Name of Part*
26,242		$1\frac{3}{8}'' \times 22''$ hose with FP-5 coupling and $1\frac{1}{4}$-in. nipple, complete, per pair.
46,100	2	FP-5 hose coupling, complete, includes 3 per pair.
3,279	3	Hose-coupling gasket.
46,223	4	$1\frac{3}{8}'' \times 1\frac{1}{4}''$ threaded hose nipple.
26,378	5	Galvanized annealed steel clamp, only for $1\frac{3}{8}$-in. hose.
4,866	6	Hose-clamp bolt and nut.
2,463	7	$1\frac{3}{8}'' \times 22''$ hose.

HOSE AND FP-4 COUPLING

The hose and FP-4 coupling is the standard for brake-pipe connection on locomotives having 1-in. piping. The piece and reference numbers are given in the accompanying list.

Pc. No.	*Ref. No.*	*Name of Part*
46,283		$1\frac{1}{8}'' \times 22''$ hose with FP-4 coupling and $1\frac{1}{4}$-in. nipple, complete, per pair.
46,126	2	FP-4 hose coupling, complete, includes 3 per pair.
3,279	3	Hose-coupling gasket.
46,164	4	$1\frac{1}{8}'' \times 1\frac{1}{4}''$ threaded hose nipple.
28,221	5	Galvanized annealed steel clamp, only for $1\frac{1}{8}$-in. hose.
4,866	6	Hose-clamp bolt and nut.
2,243	7	$1\frac{1}{8}'' \times 22''$ hose.

HOSE AND HP-4 COUPLING

The hose and HP-4 coupling is the standard for signal-pipe connection on locomotives and cars; also for brake-cylinder connection between engine and tender with ET equipments and schedules SWA and SWB. The piece and reference numbers are given in the accompanying list.

Pc. No.	*Ref. No.*	*Name of Part*
46,252		$1\frac{1}{8}'' \times 22''$ hose with HP-4 coupling and $\frac{3}{4}$-in. nipple, complete, per pair.

Pc. No.	Ref. No.	Name of Part
46,102	2	HP-4 hose coupling, includes 3 per pair.
3,279	3	Hose-coupling gasket.
46,169	4	$1\frac{1}{8}'' \times \frac{3}{4}''$ threaded hose nipple.
28,221	5	Galvanized annealed steel clamp, only for $1\frac{1}{8}$-in. hose.
4,866	6	Hose-clamp bolt and nut.
2,243	7	$1\frac{1}{8}'' \times 22''$ hose.

HOSE CONNECTIONS

TRUCK-HOSE CONNECTION

In Fig. 1 is shown the hose connection used with schedules D for connection to engine-truck brake cylinder. The piece and

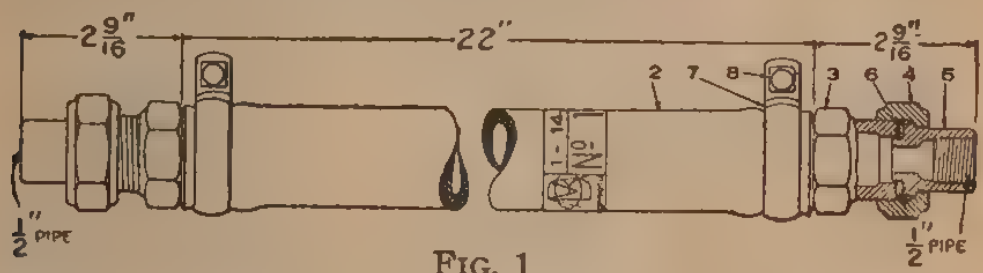

FIG. 1

reference numbers of the connection and its parts are given in the accompany list.

Pc. No.	Ref. No.	Name of Part
46,673		$1\frac{1}{8}'' \times 22''$ hose with union nipples for $\frac{1}{2}$-in. pipe.
2,243	2	$1\frac{1}{8}'' \times 22''$ hose.
46,172		$1\frac{1}{8}'' \times 1\frac{1}{2}''$ union hose nipple, complete, includes 3, 4, 5, and 6.
46,171	3	$1\frac{1}{8}'' \times \frac{1}{2}''$ union hose nipple.
2,165	4	$\frac{1}{2}$-in. union nut.
2,166	5	$\frac{1}{2}$-in. union swivel.
2,204	6	$\frac{1}{2}$-in. union gasket.
28,222		Galvanized annealed steel clamp, complete, for $1\frac{1}{8}$-in. hose, includes 7 and 8.
28,221	7	Galvanized annealed steel clamp, only for $1\frac{1}{8}$-in. hose.
4,866	8	Hose-clamp bolt and nut.

ENGINE-AND-TENDER HOSE CONNECTION

In Fig. 2 is shown an engine-and-tender hose connection, that, while not standard, is furnished when specified with combined automatic and straight-air brake, schedule SWB. for brake-pipe and straight-air pipe connections between engine and tender. The piece and reference numbers of the connection and its parts are given in the accompanying list.

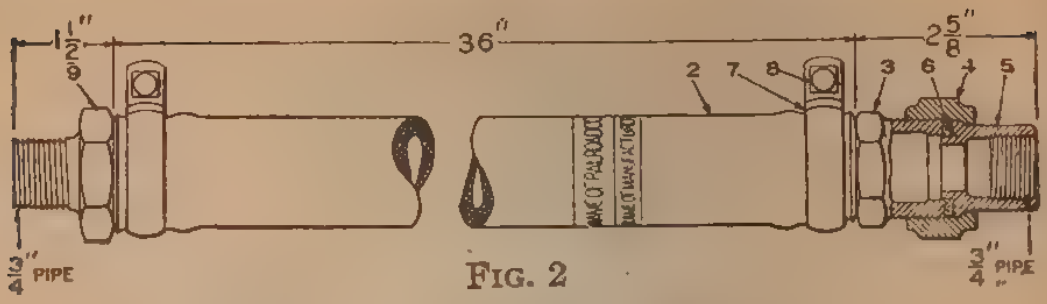

FIG. 2

Pc. No.	*Ref. No.*	*Name of Part*
46,642		1⅛"×36" hose with threaded and union nipples for ¾-in. pipe, complete.
4,893	2	1⅛"×36" hose.
46,166		1⅛"×¾" union hose nipple, complete, includes 3, 4, 5, and 6.
46,165	3	1⅛"×¾" union hose nipple.
3,306	4	¾-in. union nut.
3,307	5	¾-in. union swivel.
3,308	6	¾-in. union gasket.
28,222		Galvanized annealed steel clamp for 1⅛-in. hose, complete, includes 7 and 8.
28,221	7	Galvanized annealed steel clamp, only for 1⅛-in. hose.
4,866	8	Hose-clamp bolt and nut.
46,169	9	1⅛"×¾" threaded hose nipple.

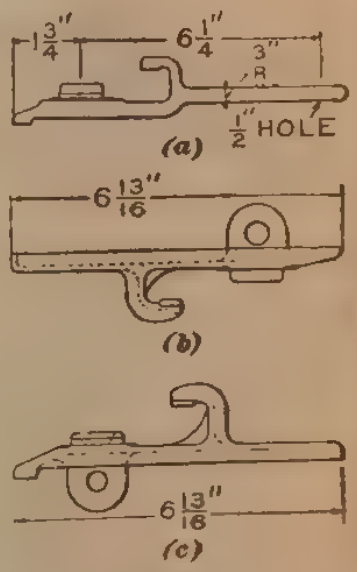

FIG. 3

DUMMY COUPLINGS

The new-style type F dummy coupling, view (*c*), Fig. 3, is used with the FP-4 and FP-5 hose couplings, and the new-style type H dummy coupling, view (*b*), is used with the HP-4 hose coupling. The new style are now regularly furnished with all brake equipments and for repairs. The old-style dummy coupling, view (*a*), can be used with both the F and the H hose couplings. It is furnished on special order only. The piece numbers are as follows: F dummy coupling, new style, 20,806; H dummy coupling, new style, 20,810; F dummy coupling, old style, 2,133; and H dummy coupling, old style, 2,134.

FIG. 4

CLEANING TOOL

The piece number of the coupling-groove cleaning tool, which is shown in Fig. 4, is 46,096.

APPROXIMATE WEIGHTS OF HOSE, COUPLINGS, AND FITTINGS

Piece No.	Name of Part	Weight Pounds
46,242	$1\frac{3}{8}''\times 22''$ hose with FP-5 coupling and $1\frac{1}{4}$-in. nipple, per pair	12
3,056	FP-5 hose coupling, per pair	$4\frac{5}{8}$
46,283	$1\frac{1}{8}''\times 22''$ hose with FP-4 coupling and $1\frac{1}{4}$-in. nipple, per pair	11
3,058	FP-4 hose coupling, per pair	$4\frac{1}{4}$
46,252	$1\frac{1}{8}''\times 22''$ hose with HP-4 coupling and $\frac{3}{4}$-in. nipple, per pair	10
3,060	HP-4 hose coupling, per pair	$4\frac{1}{2}$
46,673	$1\frac{1}{8}''\times 22''$ hose with union nipple for $\frac{1}{2}$-in. pipe	$3\frac{3}{4}$
46,642	$1\frac{1}{8}''\times 36''$ hose with threaded and union nipple for $\frac{3}{4}$-in. pipe	$4\frac{3}{4}$
46,635	FS-4 hose coupling, per pair	5
46,156	FS-5 hose coupling, per pair	5
3,788	$1\frac{1}{4}''\times 1\frac{1}{4}''$ angle fitting	3
3,819	$1''\times 1\frac{1}{4}''$ angle fitting	$2\frac{1}{2}$
2,237	$\frac{3}{4}''\times \frac{3}{4}''$ angle fitting	$\frac{5}{8}$
20,806	F dummy coupling, new style	1
2,133	F dummy coupling, old style	1
20,810	H dummy coupling, new style	$\frac{3}{4}$
2,134	H dummy coupling, old style	1
46,096	Coupling-groove cleaning tool	$\frac{1}{4}$

M. C. B. SPECIFICATIONS FOR AIR-BRAKE HOSE

In 1901, specifications and tests for air-brake hose were adopted as recommended practice; they were advanced to standard in 1903, and revised 1905.

"1. All air-brake hose must be soft and pliable, and not less than 2-ply nor more than 4-ply. They must be made of rubber and cotton fabric, each of the best of its kind made for the purpose. No rubber substitutes or short-fiber cotton to be used.

"2. The tube must be hand-made, composed of three calendars of rubber. It must be free from holes and imperfections, and in joining must be so firmly united to the cotton fabric that it cannot be separated without breaking or splitting the

tube. The tube must be of such composition and so cured as to successfully meet the requirements of the stretching test given below; the tube to be not less than $\frac{3}{32}$ in. thick at any point.

"3. The canvas or woven fabric used as wrapping for the hose to be made of long-fiber cotton, loosely woven, and to be from 38 to 40 in. wide, and to weigh not less than 20 and 22 oz. per yd., respectively. The wrapping must be frictioned on both sides, and must have, in addition, a distinct coating or layer of gum between each ply of wrapping. The canvas wrapping must be applied on the bias. Woven or braided covering should be so loose in texture that the rubber on either side will be firmly united.

"4. The cover must be of the same quality of gum as the tube, and must not be less than $\frac{1}{16}$ in. thick.

"5. Hose is to be furnished in 22-in. lengths. Variations exceeding $\frac{1}{4}$ in. in length will not be permitted. Rubber caps not less than $\frac{1}{16}$ in. nor more than $\frac{1}{8}$ in. must be vulcanized on each end.

"6. The inside diameter of hose must not be less than $1\frac{3}{8}$ in. nor more than $1\frac{7}{16}$ in., nor must the outside diameter exceed $2\frac{1}{8}$ in. Hose must be smooth and regular in size throughout its entire length, except at a point $2\frac{1}{2}$ in. from either end, where the inside calendar of rubber may be increased $\frac{1}{16}$ in. for the distance of $\frac{1}{4}$ in. toward either end and then tapering to the regular diameter.

"7. Each length of hose must have vulcanized to it a badge of white or red rubber. On the top of the badge the name of the purchaser; on the bottom the maker's name; on the left-hand end the month and year of manufacture, and on the right-hand end the serial number and the letters 'M. C. B. Std.' These letters and figures must be clear and distinct, not less than $\frac{3}{16}$ in. in height, and stand in relief not less than $\frac{1}{32}$ in. so that they can be removed by cutting without endangering the cover. Each lot of 200 or less must bear the manufacturer's serial number, commencing at 1 on the first of the year, and continuing consecutively until the end of the year.

"For each lot of 200, one extra hose must be furnished free of cost.

"8. Test hose will be subject to the following tests:

TESTS TO WHICH SAMPLES WILL BE SUBJECTED

"**Bursting Test.**—All hose selected for test will have a section

5 in. long cut from one end and the remaining 17 in. will then be subjected to a hydraulic bursting pressure of 400 lb. per sq. in. for 10 min. which it must stand without failure. At a pressure of 100 lb. per sq. in. it must not expand more than $\frac{1}{4}$ in. in diameter or change in length more than $\frac{1}{4}$ in., nor develop any small leaks or defects.

"**Friction Test.**—A section 1 in. long will be taken from the 5-in. piece previously cut off, and the quality determined by suspending a 20-lb. weight to the separated end, the force being applied radially, and the time of unwinding must not exceed 8 in. in 10 min.

"**Stretching Test.**—Another section 1 in. long will be cut from the balance of the 5-in. piece and the inner tube or lining will be separated from the ply and cut at the lap. Marks 2 in. apart will be placed on this section, and then the section will be quickly stretched until the marks are 8 in. apart and immediately released. The section will then be remarked as at first and stretched to 8 in. and will remain so stretched 10 min. It will then be released and 10 min. later the distance between the marks last applied will be measured. In no case must the test piece break or show a permanent elongation of more than $\frac{1}{4}$ in. between the marks last applied; 1-in. strips will also be taken from the cover and subjected to the same test.

"**Tensile Test.**—Another section 1 in. long will be cut from the remainder of the 5-in. piece and the rubber tube or lining will be separated from the ply and cut at the lap. It will then be reduced in the middle for a distance of 2 in. by $\frac{1}{2}$ in. wide parallel. The parallel section shall be spread to the full width of 1 in. at the end by curves of $\frac{1}{2}$ in. radius. This specimen shall be stretched uniformly by gripping the enlarged ends, and in no case should the tensile strength per square inch be less than 400 lb., nor the elongation at the time of failure less than 8 in., measured by marks placed originally 2 in. apart before breaking.

"If the test hose fails to meet the required tests, the lot from which it was taken may be rejected without further examination and returned to the manufacturer, who shall pay the freight charges in both directions. If the test hose is satisfactory the entire lot will be examined and those complying with the specifications will be accepted.

Label For Air-Brake Hose

Sheet M. C. B. 18

"In 1902 the label for hose, as shown in the specifications for air-brake hose, was made a standard. Revised in 1903. The specification for its use is as follows:

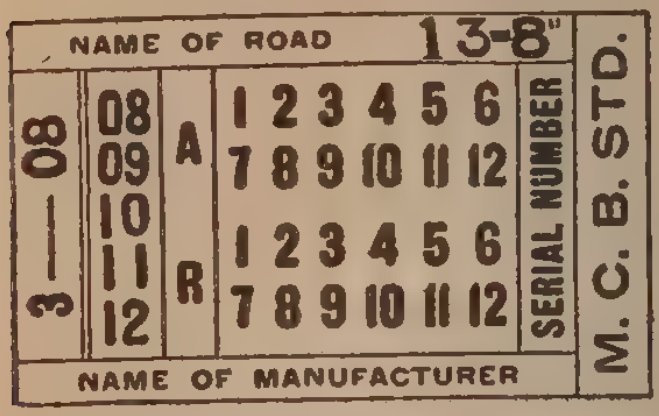

"Each standard length of hose must be branded with the name of the manufacturer, year and month when made, and serial number, the initials of the railway company, and also have a table of raised letters at least $\frac{3}{16}$ in. high to show the date of application and removal, thus,

"All markings are to be full and distinct and made on a thin layer of white or red rubber, vulcanized, and so applied as to be removed by cutting with a knife or sharp instrument."

AIR GAUGES

TYPES OF GAUGE

The 5-in. duplex air gauge, Piece No. 23,334, and shown in Fig. 1, has a brass case with silvered dial; it is used with ET locomotive and old-standard engine equipments. The weight is $3\frac{3}{4}$ lb.

The $3\frac{1}{2}$-in. duplex air gauge, Piece No. 23,338, and shown in Fig. 2, has a brass case with a silvered dial; it is used with ET locomotive equipment. The weight is $2\frac{1}{4}$ lb.

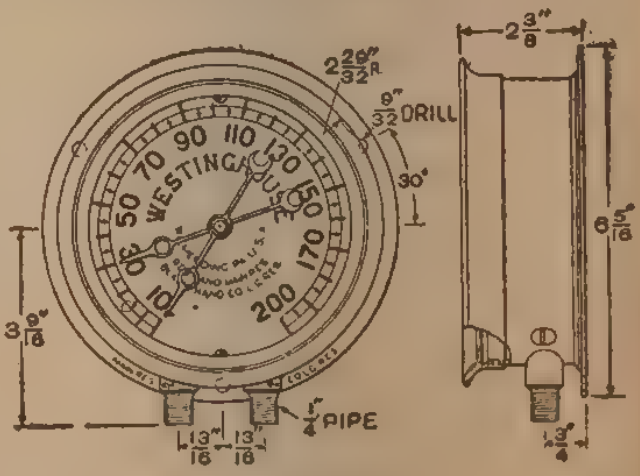

Fig. 1

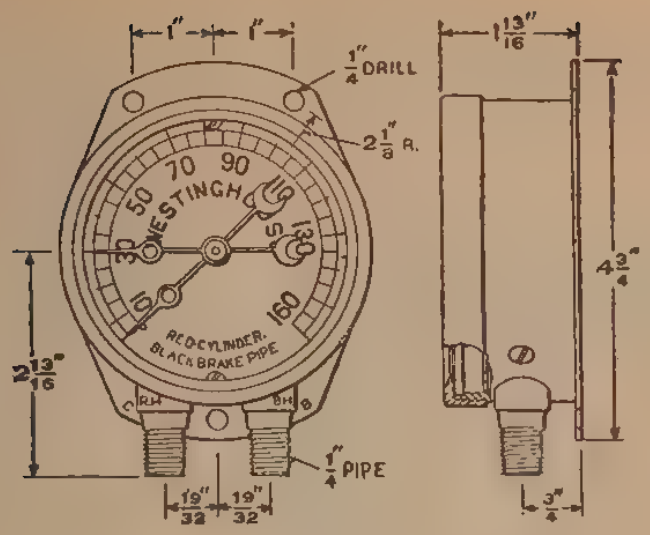

FIG. 2

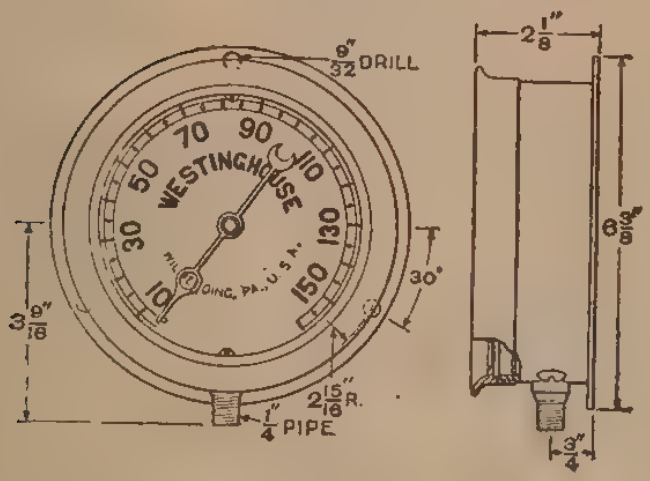

FIG. 3

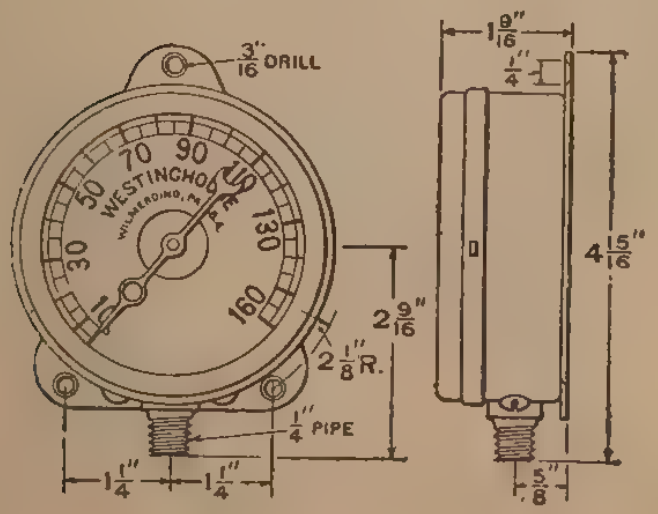

FIG. 4

The 5-in. single-pointer air gauge, Piece No. 23,369, and shown in Fig. 3, has a brass case with a silvered dial; it is used with schedule SWA engine equipment, caboose cars, and for general purposes. The weight is $3\frac{1}{4}$ lb.

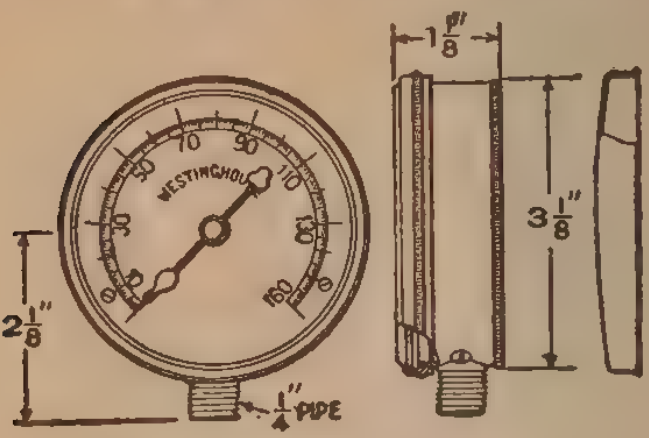

FIG. 5

The $3\frac{1}{2}$-in. single-pointer air gauge, Piece No. 59,099, and shown in Fig. 4, has a pressed-steel case with a silvered dial; it is used for general purposes, or it may be substituted for the 5-in. air gauge, Piece No. 23,369, for SWA engine equipment. The weight is $2\frac{1}{4}$ lb.

The inspector's test gauge, Piece No. 20,458, and shown in Fig. 5, has a brass case with a silvered dial and nickel-plated cap. The weight is 1 lb. Without the cap, the piece number is 20,976; with a spring cap, 20,975, the piece number of the coupling device for the inspector's test gauge, which will fit any size standard hose coupling, is 13,775.

DUPLEX AIR GAUGE

A duplex air gauge, which indicates both brake-pipe and main-reservoir pressures, is located in the engine cab, in a position convenient for the engineer. This gauge, which is shown in the accompanying illustration, consists of two gauges combined in one, the same dial serving for both hands. The left-hand gauge, which connects with *M*, operates the black hand. This hand is said to represent brake-pipe pressure; although *M* has a pipe connection to chamber *D* and the equalizing reservoir, there is direct connection between the equalizing reservoir and the brake pipe in release and running positions, but not in service, lap, or emergency positions. The other gauge connection *T*, a part of the right-hand gauge, is piped to the connection *R* of the brake valve, so that this hand, colored red, indicates main-reservoir pressure.

An inside view of the air gauge is shown in view (*b*), in which *A* and *B* are two bent tubes of elliptic shape, as shown in (*d*). The tube *A* is connected to the fitting *M*, and the tube *B* to the fitting *T*. The bottom ends of the tubes are held fast and the top ends are closed and free. The action of the gauge may be thus explained: If a tube of elliptic section is bent, as shown in view (*b*), and then subjected to an internal pressure, the force exerted will tend to straighten the tube, because the force exerted within the tube tends to make it assume the circular form shown dotted in view (*c*). In assuming the circular form, the concave side *a* of the bent tube tends to lengthen, while the convex side *b* tends to shorten. These combined efforts tend to straighten out the tube, and therefore impart a movement to its free end.

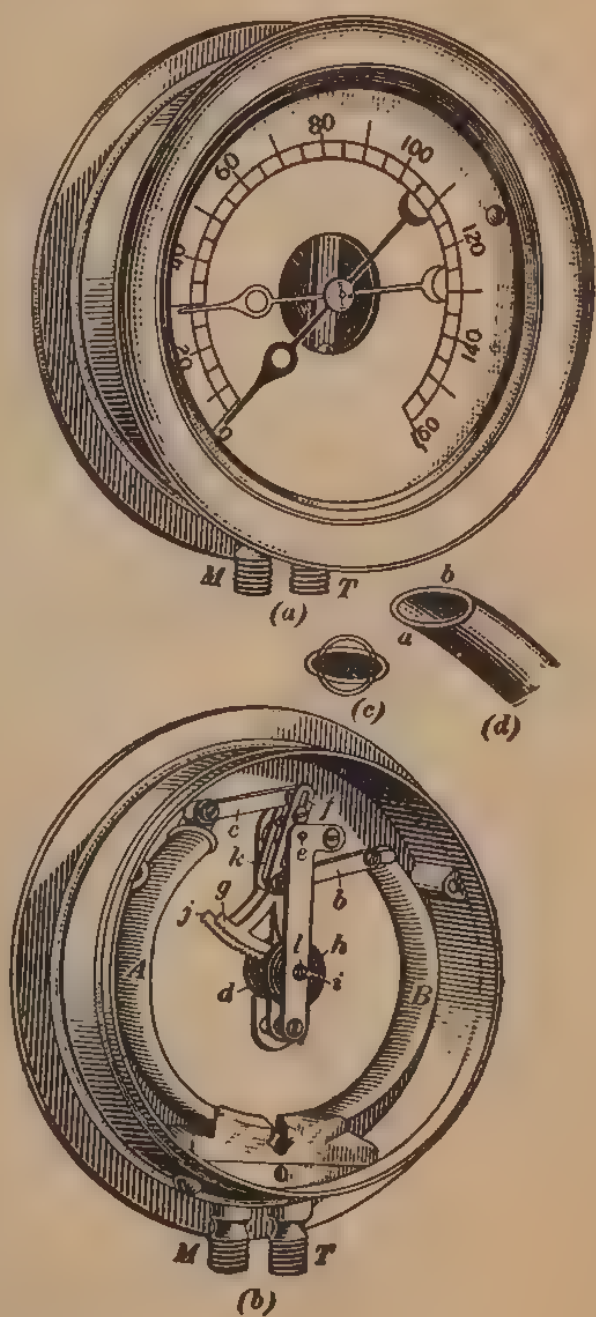

Tube *A* is connected to one end of the lever *kj* by means of the link *c*. This lever is pivoted at *e*, and the end *j* forms a toothed sector that meshes with a pinion on the spindle *l*. The spindle *l* carries the black hand, or pointer, of the gauge,

is hollow, and rotates about the spindle *i*, which carries the red hand. Tube *B* is connected by link *b* to the lever *fg* at a point below the fulcrum, or pivot, so that the red hand will be turned in the same direction as the black one. The lower end of the lever *fg* takes the form of a toothed sector that meshes with a pinion on the spindle *l* and operates the black hand.

Copper pipe should be used for air-gauge connections in preference to iron pipe, because the latter, if not carefully and correctly adjusted, will put a strain to the mechanism of the gauge when coupled to it, that will affect the accuracy of the indications; also, the gauge will indicate incorrectly if situated in too high a temperature.

Operation of Gauge.—As brake-pipe pressure connects with *M*, air under pressure enters tube *A* and tends to straighten it out. This causes the free end of *A* to move to the left, drawing the link *c* with it, thus moving the toothed sector *j* to the right. As this sector engages with the spindle *l*, the latter is made to move clockwise, that is, to have a motion in the same direction as the hands of a clock. The black hand is thus given a similar motion.

Main-reservoir pressure acts within the tube *B* to straighten it, and the free end is moved to the right. As the bar *b* is connected below the fulcrum of the lever *fg*, the movement of the free end of *B* will cause the toothed sector *g* to move to the right and turn the red hand clockwise also. The greater the pressure within the tubes, the greater will be the tendency for them to straighten out, and the higher will be the pressure registered by the gauge; *d* and *h* are small coil springs to take up the play or backlash in the teeth of the sector and pinion.

COCKS

ANGLE COCKS

Self-locking angle cocks are now standard and are furnished with all complete locomotive, passenger-car, and freight-car

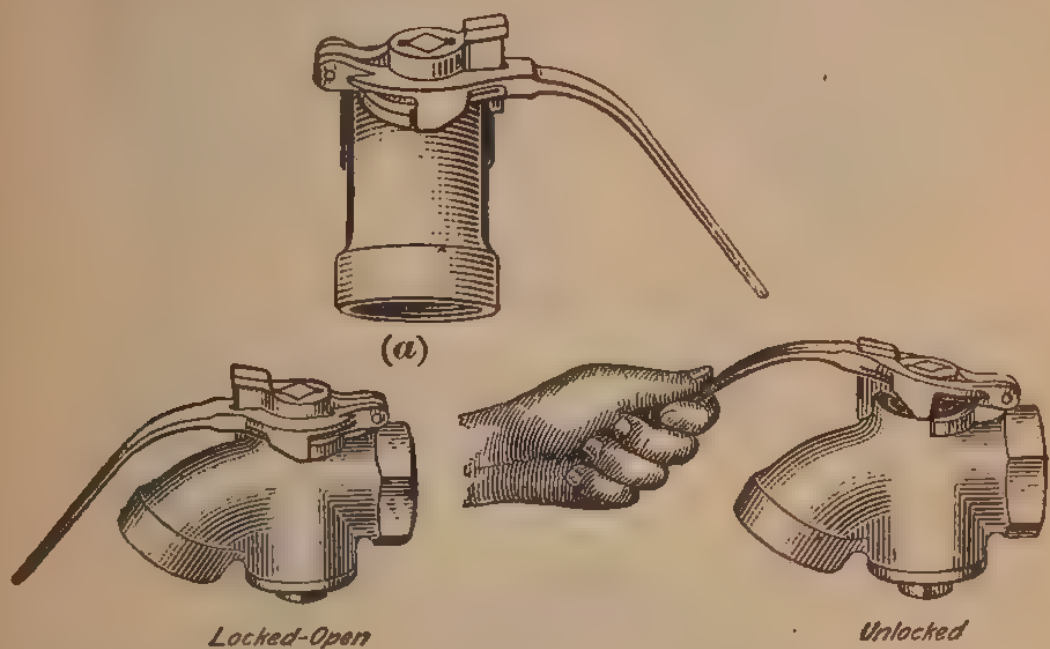

FIG. 1

brake equipments unless otherwise specified on orders. One of these cocks locked closed is shown in Fig. 1 (*a*); locked open,

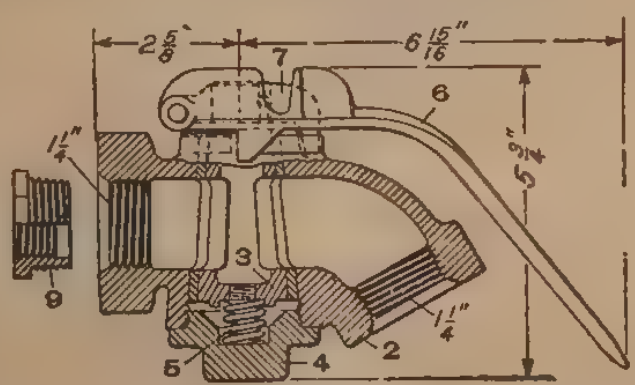

FIG. 2

in (*b*); and unlocked in (*c*). A cross-section through the cock is shown in Fig. 2. The weight of the cock is 10 lb. The piece

and reference numbers of the cock and its parts are given in the accompanying list.

Pc. No.	*Ref. No.*	*Name of Part*
22,413		$1\frac{1}{4}$-in. self-locking angle cock, complete.
22,412		$1'' \times 1\frac{1}{4}''$ self-locking angle cock, complete, includes 9.
2,176	2	Body, bushed.
2,096	3	Key.
2,097	4	Cap.
2,098	5	Spring.
20,128		Handle, complete, includes 6 and 7
20,127	6	Handle, only.
20,126	7	Handle socket.
2,178	9	$1\frac{1}{4}'' \times 1''$ bushing.

CUT-OUT COCKS

$1\frac{1}{4}$-IN. CUT-OUT COCKS

The $1\frac{1}{4}$-in. cut-out cock, shown in Fig. 1, weighs $8\frac{1}{2}$ lb.; the

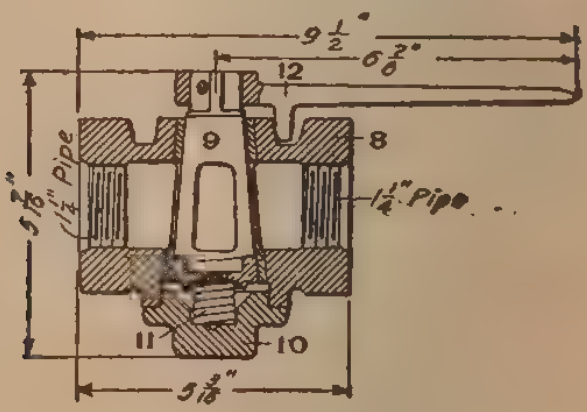

FIG. 1

piece and reference numbers of the cock and its parts are given in the accompanying list

Pc. No.	*Ref. No.*	*Name of Part*
2,092		$1\frac{1}{4}$-in. cut-out cock, complete.
2,093	8	Body, bushed.
2,096	9	Key.
2,097	10	Cap.
2,098	11	Spring.
2,100	12	Handle.

1-IN. CUT-OUT COCKS

The 1-in. cut-out cock, shown in Fig. 2, weighs 5½ lb.; the piece and reference numbers of the cock and its parts are given in the accompanying list.

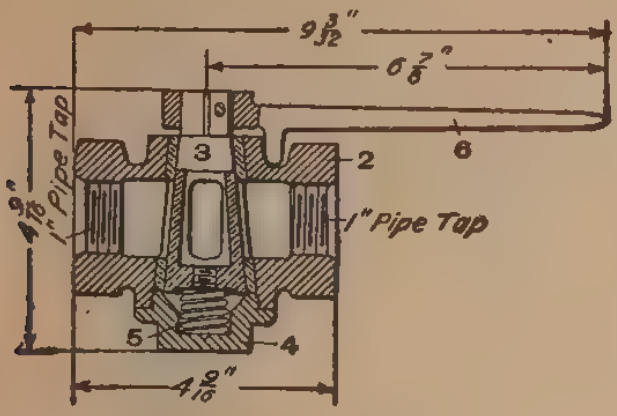

FIG. 2

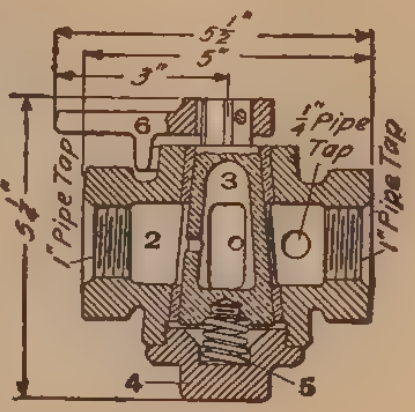

FIG. 3

Pc. No.	*Ref. No.*	*Name of Part*
2,135		1-in. cut-out cock, complete.
2,136	2	Body, bushed.
2,139	3	Key.
2,140	4	Cap.
2,098	5	Spring.
2,103	6	Handle.

The 1-in. main-reservoir cut-out cock, shown in Fig. 3, is furnished with ET locomotive-brake equipments; it weighs 8 lb. The piece and reference numbers of the cock and its parts are given in the accompanying list.

Pc. No.	*Ref. No.*	*Name of Part*
11,905		1-in. main-reservoir cut-out cock, complete, without governor union connection.
21,979		1-in. main-reservoir cut-out cock, complete, with governor union connection.
11,906	2	Body, bushed.
11,909	3	Key.
2,097	4	Cap.
2,098	5	Spring.
11,667	6	Handle.

Cut-out cocks of both the 1-in. and 1¼-in. sizes can be obtained with self-locking handles, if desired. These self-locking handles are similar to the standard self-locking angle cock handles, except that the cut-out cock handle is straight instead of curved. The self-locking handle can also be applied to cut-out cocks now

in service. When ordering these handles, the following piece numbers should be used:

Pc. No.	*Name of Part*
33,073	1-in. self-locking cut-out cock, complete.
32,930	Self-locking handle, complete, for 1-in. cut-out cock.
33,072	1¼-in. self-locking cut-out cock, complete.
37,691	Self-locking handle, complete, for 1¼-in. cut-out cock.

GOVERNOR UNION CONNECTION

The governor union connection is shown in Fig. 4; it weighs ¼ lb. The piece and reference numbers of this connection and its parts are as follows:

Pc. No.	*Ref. No.*	*Name of Part*
20,485		Governor union connection, complete, includes 202, 203, and 204.
20,470	202	Union stud.
2,001	203	Union nut.
16,286	204	Union swivel.

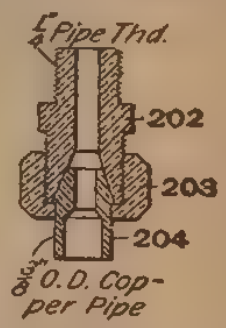

FIG. 4

¾-IN. CUT-OUT COCK

This cock, shown in cross-section in Fig. 5, is furnished when specially ordered with UC passenger-car brake equipments, but an additional price is charged. Its net weight is 2½ lb. The piece and reference numbers of the cock and its parts are given in the accompanying list.

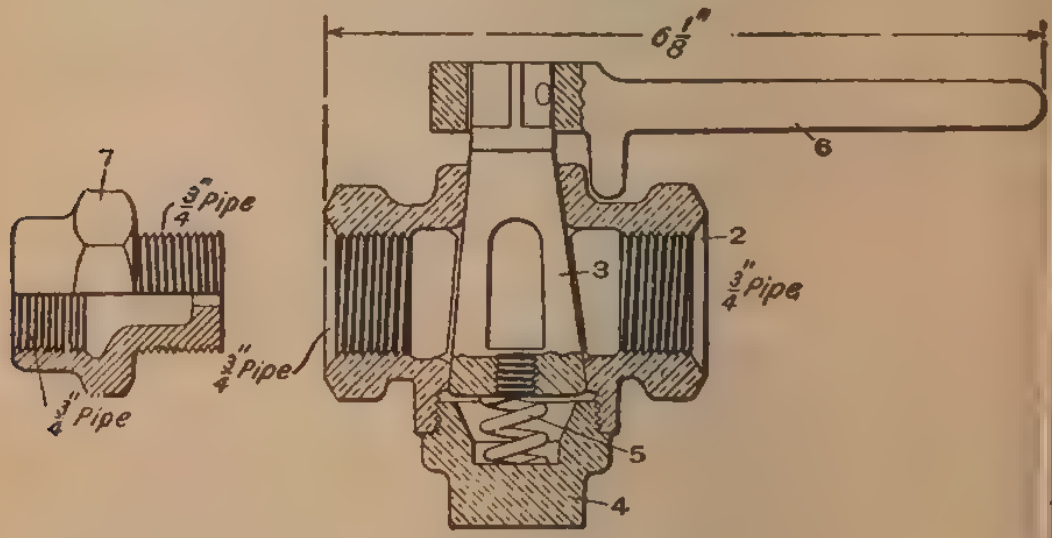

FIG. 5

Pc. No.	*Ref. No.*	*Name of Part*
2,233		¾-in. cut-out cock, complete.
2,235	2	Body.
2,236	3	Key.
2,144	4	Cap.
2,145	5	Spring.
15,279	6	Handle.

The ¾-In. Cock with Choke Fittings.—The ¾-in. cut-out cock with the choke fitting 7 is furnished with the ET locomotive brake for use in brake-cylinder pipe leading to the tender. The size of the opening through the choke fitting is $\frac{5}{16}$ in. It weighs 2¾ lb. The piece and reference numbers of the cock and choke fitting are as follows:

Pc. No.	*Ref. No.*	*Name of Part*
14,494		¾-in. cut-out cock with choke fitting, complete.
11,644	7	Choke fitting.

½-IN. CUT-OUT COCK

Cross-sections of the ½-in. cut-out cock and of its choke fitting 7 are shown in Fig. 6; the weight of the cock is 1½ lb. The

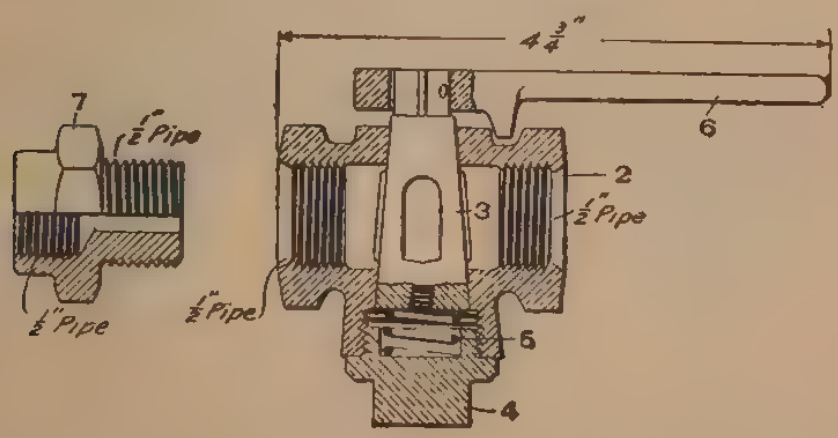

FIG. 6

piece and reference numbers of the cock and its parts are given in the accompanying list.

Pc. No.	*Ref. No.*	*Name of Part*
15,213		½-in. cut-out cock, complete
2,228	2	Body.
2,229	3	Key.
2,367	4	Cap.
2,231	5	Spring.
9,035	6	Handle.

The $\frac{1}{2}$-In. Cock with Choke Fittings.—The $\frac{1}{2}$-in. cut-out cock with choke fitting 7 is used with ET equipment in pipe leading to front-truck brake cylinder. The size of the opening in the choke fitting is $\frac{5}{16}$ in. The cut-out cock weighs $1\frac{3}{4}$ lb. The piece and reference numbers of the cock and fitting are as follows:

Pc. No.	*Ref. No.*	*Name of Part*
14,493		$\frac{1}{2}$-in. cut-out cock with choke fitting, complete.
11,645	7	Choke fitting.

$\frac{3}{8}$-IN. CUT-OUT COCKS

In Fig. 7 is shown a cross-section of the $\frac{3}{8}$-in. cut-out cock; it weighs $1\frac{3}{8}$ lb. The piece and reference numbers of the cock and its parts are given in the accompanying list.

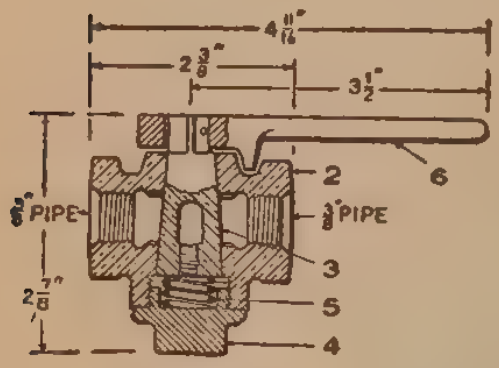

FIG. 7

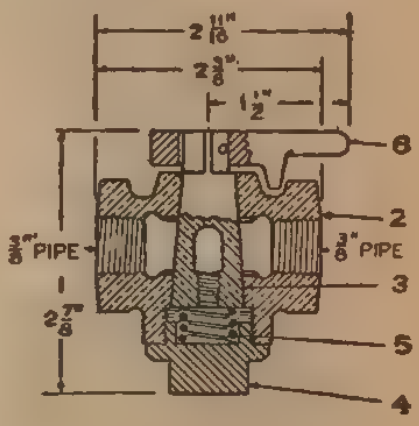

FIG. 8

Pc. No.	*Ref. No.*	*Name of Part*
9,053		$\frac{3}{8}$-in. cut-out cock, complete.
9,055	2	Body.
9,056	3	Key.
2,367	4	Cap.
2,231	5	Spring.
9,035	6	Handle.

In Fig. 8 is shown a cross-section of the $\frac{3}{8}$-in. cut-out cock, with a short handle, that is furnished as part of dead-engine feature of ET locomotive-brake equipments; it weighs $1\frac{1}{4}$ lb. The piece and reference numbers of the cock and its parts are given in the accompanying list.

Pc. No.	*Ref. No.*	*Name of Part*
22,459		⅜-in. cut-out cock, with short handle, complete.
9,055	2	Body.
9,056	3	Key.
2,367	4	Cap.
2,231	5	Spring.
22,458	6	Handle.

⅜-IN. AND 1-IN. DOUBLE CUT-OUT COCK

In Fig. 9 is shown a cross-section through the ⅜-in. and 1-in. double cut-out cock. This cock is used only in connection with the No. 5 ET locomotive brake equipment, for cutting

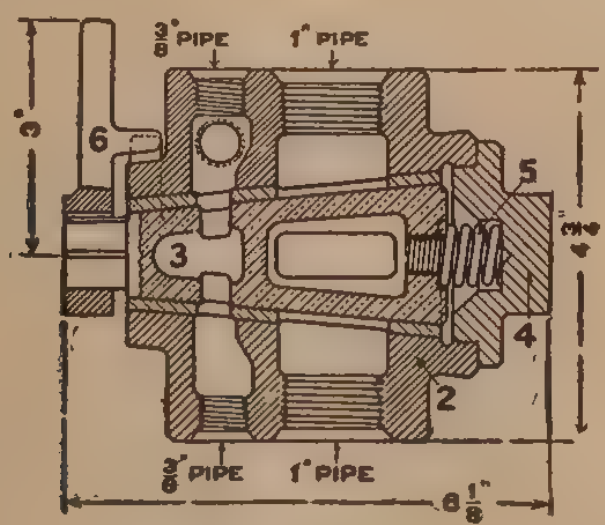

FIG. 9

out the H-5 brake valve when double-heading. It weighs 10 lb. The piece and reference numbers are given in the accompanying list:

Pc. No.	*Ref. No.*	*Name of Part*
11,661		⅜-in. and 1-in. double cut-out cock, complete.
11,662	2	Body, bushed.
10,658	3	Key.
10,657	4	Cap.
2,098	5	Spring.
11,667	6	Handle.

TRAIN AIR-SIGNALING SYSTEM

GENERAL ARRANGEMENT OF APPARATUS

The general arrangement of the train *air-signaling apparatus* on an engine, tender, and passenger car is shown in the following figures. The engine, tender, and each of the cars are piped

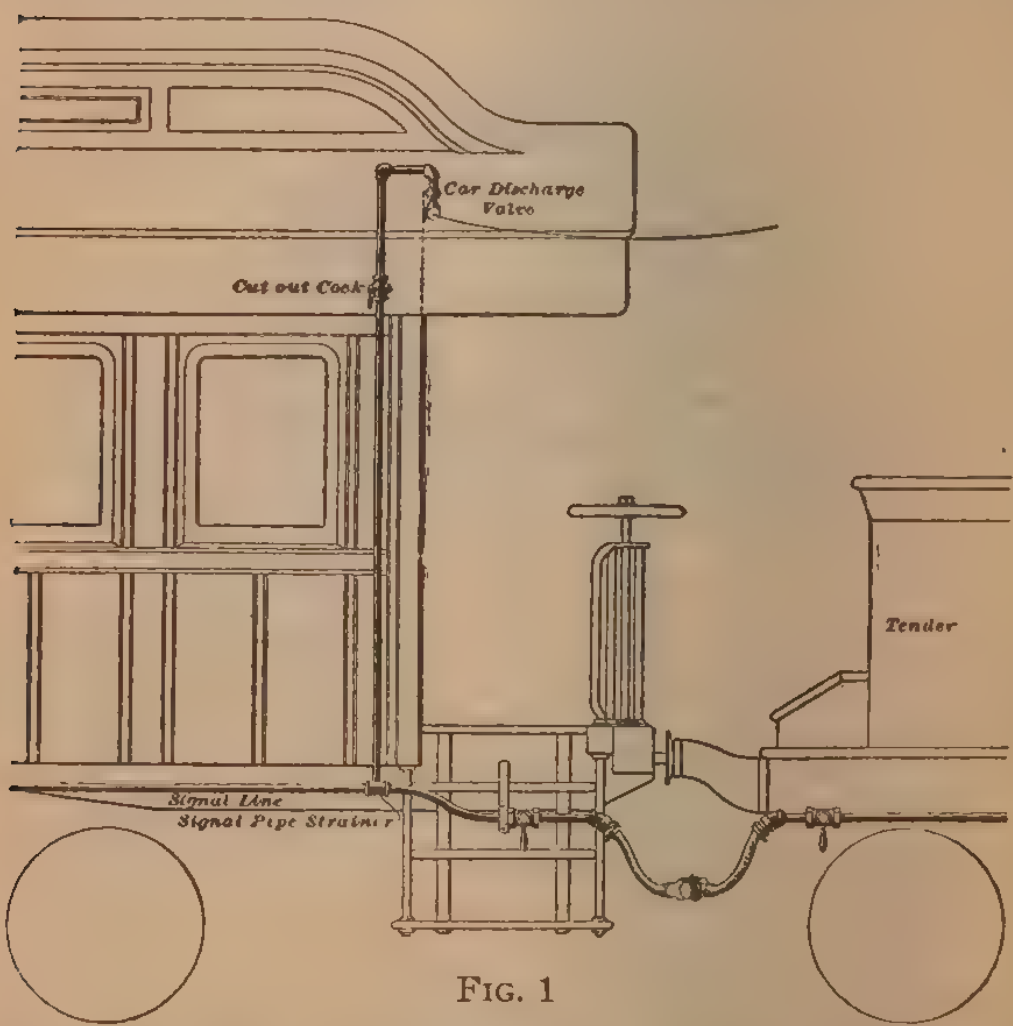

FIG. 1

with a $\frac{3}{4}$-in. pipe, which is connected between cars by means of hose, so that when all the hose is coupled, the signal-pipe line extends throughout the entire train.

A *car discharge valve*, Fig. 1, is provided on each car. This is usually located outside the car above the door, as shown, and is piped to the train-signal pipe. Sometimes, however, it is placed inside the car above the door, to guard against the valve being clogged in winter. The former position is preferable, however, as the chances of clogging are small, and the annoy-

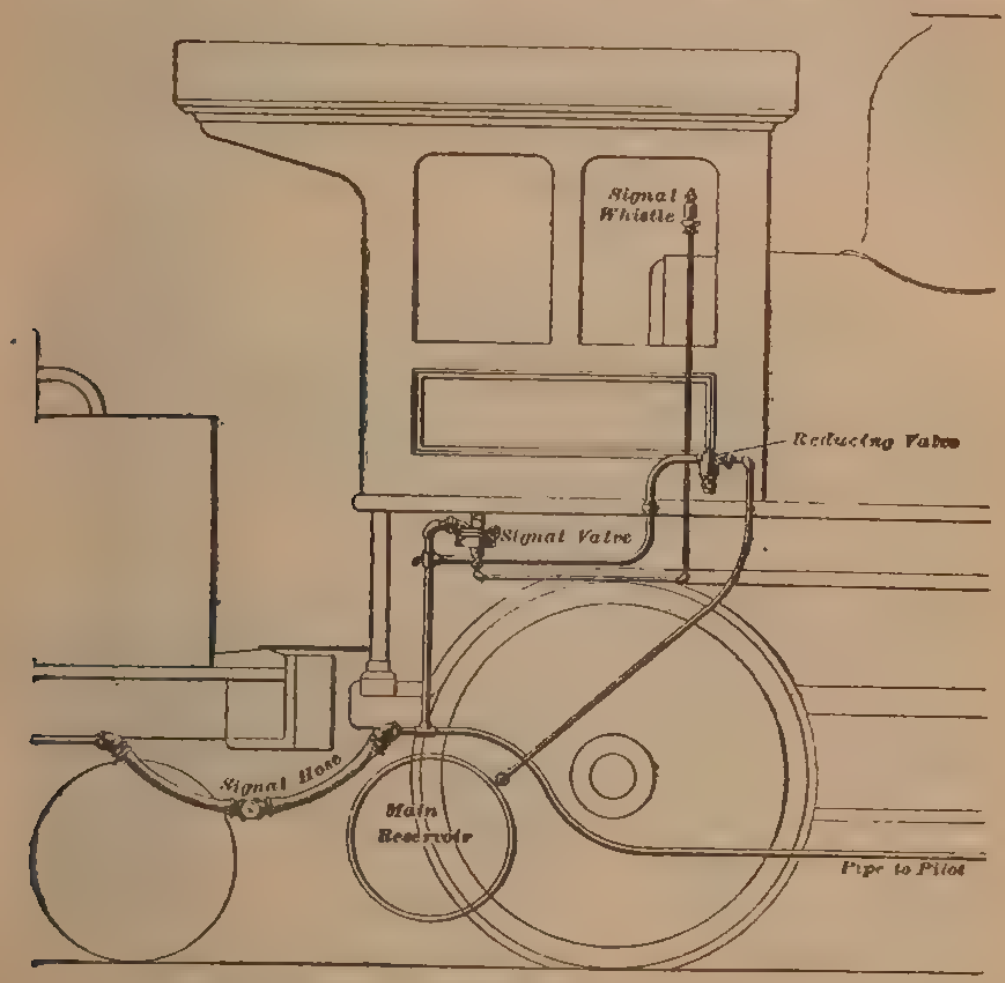

FIG. 2

ance caused by the sharp sound of discharging air every time the valve is opened to make signals is avoided.

A signal cord is attached to the lever of the discharge valve, and one end extends across the platform and is fastened in a suitable manner to the hood, while the other end extends through the car and is fastened to the hood on the other end of the car. This cord enables the discharge valve to be operated from any part of the car.

The air-signal apparatus on the engine, Fig. 2, consists of the signal valve, signal whistle, and pressure-reducing valve. A $\frac{3}{8}$-in. pipe leads from the main reservoir to an air strainer, then to the reducing valve, thence leads to, and connects with, the T fitting *s* in the signal pipe. Air from the main reservoir can thus pass through the pressure-reducing valve, thence into the signal pipe and signal valve, but at a reduced pressure. A pressure of 40 lb. is usually maintained in the signal system, and the duty of the reducing valve is to diminish the pressure from 90 lb. (main-reservoir pressure) to the required pressure for use in the signal system.

SIGNAL WHISTLE

The *signal whistle*, Fig. 1 (a small whistle located in the cab, as close to the engineer as practicable), is piped to the signal valve, and it is the operation of the latter that causes the whistle to blow. The piece number of the whistle complete, when tapped for $\frac{1}{4}$-in. pipe, is 2,804. Net weight, $\frac{1}{2}$ lb. A cross-section of the whistle is shown in Fig. 2.

FIG. 1

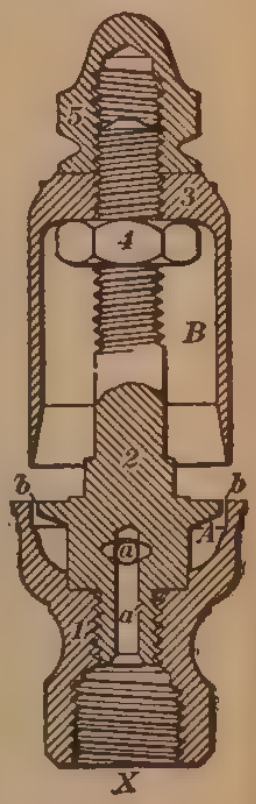

FIG. 2

When the conductor pulls the signal cord in one of the cars, he opens the discharge valve on that car and allows some of the air in the main signal pipe to escape to the atmosphere, thus reducing the signal-pipe pressure. The reduction in pressure operates the signal valve on the engine, which discharges a small quantity of air through the signal whistle in the cab, thus causing it to sound a short blast. Each time the cord is pulled, the signal whistle gives a blast.

The bowl *1* forms the base of the whistle and connects with the whistle pipe at *X*. The passage *a'* and port *a* form a passage from the whistle pipe into chamber *A*. The disk *2* deflects the escaping air and makes it strike the edge of the

bell *3* of the whistle. The tone of the whistle depends on the depth of chamber *B*. The check-nut *4* and cap nut *5* act as locknuts to lock the bell of the whistle in position after it has been adjusted.

SIGNAL REDUCING VALVE

The accompanying cross-section of the signal reducing valve shows its construction. The valve weighs 8 lb. It is adjusted at the works to govern signal-pipe pressure at a *maximum of*

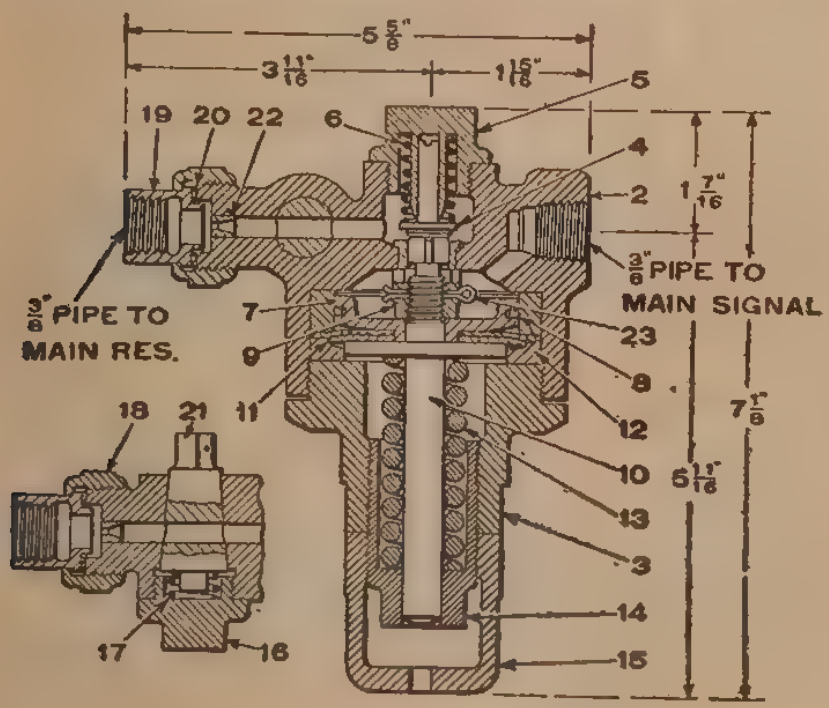

FIG. 1

40 lb. per sq. in. and any necessary readjustment must be for that pressure, in order to secure the best results. This valve is not used with the ET locomotive brake equipment. The piece and reference numbers of the valve and its parts are given in the accompanying list.

Pc. No.	*Ref. No.*	*Name of Part*
2,360		Signal reducing valve, complete.
5,182	2	Body, bushed.
2,369	3	Spring box.
2,370	4	Supply valve.
2,371	5	Supply-valve cap.
2,372	6	Supply-valve spring.

Pc. No.	*Ref. No.*	*Name of Part*
2,373	7	Piston, includes 8.
53,542	8	Piston ring.
2,376	9	Piston nut.
2,378	10	Piston rod.
2,379	11	Large diaphragm.
2,380	11	Small diaphragm.
2,381	12	Diaphragm ring.
40,451	13	Regulating spring.
2,382	14	Regulating nut.
2,383	15	Check-nut.
2,367	16	Cock cap.
2,231	17	Cock spring.
2,384	18	$\frac{3}{8}$-in. union nut.
2,385	19	$\frac{3}{8}$-in. union swivel.
2,386	20	$\frac{3}{8}$-in. union gasket.
2,366	21	Cock key.
2,368	22	Choke plug.
2,377	23	Cotter.

The choke plug *22* restricts the flow of air through the valve so that the reducing valve cannot supply air to the signal pipe faster than the car discharge valve can reduce the pressure. The tension of the regulating spring *13* is adjusted to just withstand a pressure of 40 lb. per sq. in. in the chamber above the piston *7*. When the pressure is less than this amount, the spring *13* forces piston *7* upwards and the piston stem unseats the supply valve *4*. Main-reservoir air is then free to pass through the choke plug *22*, supply valve *4*, thence to the signal pipe. As soon as the pressure in the signal pipe and chamber above piston *7* reaches 40 lb., piston *7* is forced downwards and the supply-valve spring *6* forces the supply valve to its seat, closing communication between the main reservoir and the signal pipe. Any reduction in signal-pipe pressure will allow the regulating spring *13* to force piston *7* upwards, thus opening the supply valve again. The valve then remains open until the signal-pipe pressure is again raised to 40 lb., when it closes.

SIGNAL VALVE

The accompanying cross-section shows the construction of the signal valve, which weighs 16 lb. The piece and reference numbers of the valve and its parts are given in the accompanying list.

Pc. No.	Ref. No.	Name of Part
2,205		Signal valve, complete.
9,619	2	Diaphragm case, complete, includes four each of 7 and 9.
2,209	3	Diaphragm cap.
2,224	4	¼-in. union swivel.
2,223	5	¼-in. union nut.
2,225	6	¼-in. union gasket.
6,984	7	⅜-in. eyebolt and nut.
2,217	8	Diaphragm-valve nut.
2,218	9	Eyebolt rivet.
2,215	10	Lower diaphragm plate and valve stem.
2,216	11	Upper diaphragm plate.
2,214	12	Diaphragm.
2,165	13	½-in. union nut.
2,204	14	½-in. union gasket.
2,166	15	½-in. union swivel.
2,210	16	Lower cap nut.
1,731	17	Pin for diaphragm-valve nut.

Operation of Valve.—When the signal pipe is being charged, air enters the signal valve, and, passing through the small port *d*, charges chamber *A*. It also passes through the passage *C*

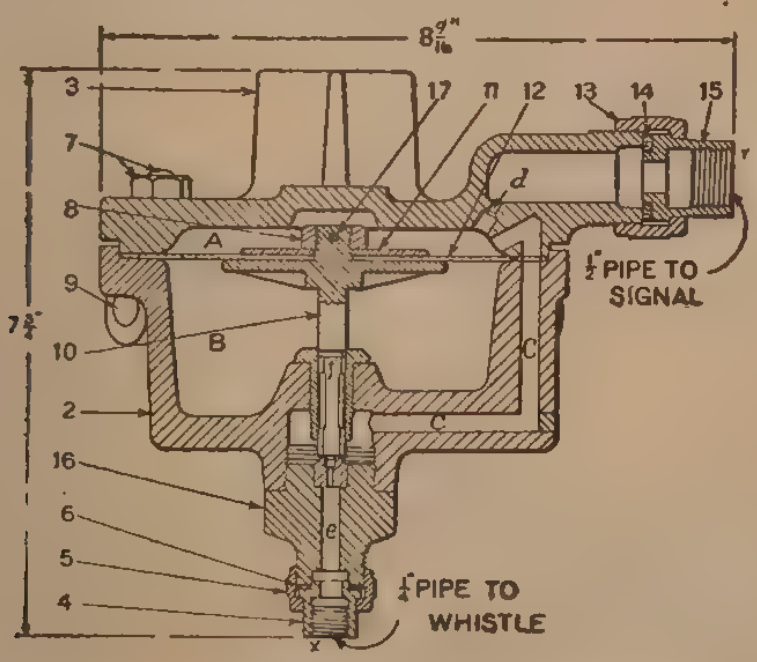

and feeds up slowly past the stem into chamber *B*, charging this to the same pressure as chamber *A*. The pressures in chambers *A* and *B* and the signal pipe are equal when the pipe is fully charged.

When the signal cord is pulled and a reduction is made in the signal pipe, it causes a reduction of pressure in the signal valve also; but, since the stem makes a rather snug fit, the pressure in chamber *A* above the diaphragm reduces faster than the pressure in chamber *B*; consequently, the diaphragm is forced upwards, and raises the stem, thus opening the port in valve seat *7*. The stem is lifted until the groove *f* is above the bushing, when the air in chamber *B* escapes quickly through the groove *f*, the milled spaces in the stem, and the passage *e*, out to the whistle, causing the latter to give a blast. Air also escapes from chamber *A* to the whistle, through the passages *cc* and *e*, but is restricted in its passage from the train signal pipe into *A* by the small port *d*.

The same reduction of pressure that operates the signal valve also opens the reducing valve, allowing air from main reservoir to flow into, and raise the pressure in, the signal pipe. This increase of pressure, following the closing of the car discharge valve, and immediately after the reduction in signal valve, increases the pressure in chamber *A* faster than in chamber *B*, thus forcing the diaphragm downwards, closing the valve leading to passage *e*, and stopping the blast of the whistle.

CAR DISCHARGE VALVE

The car discharge valve, the construction of which is shown in the accompanying cross-section, weighs 2½ lb.

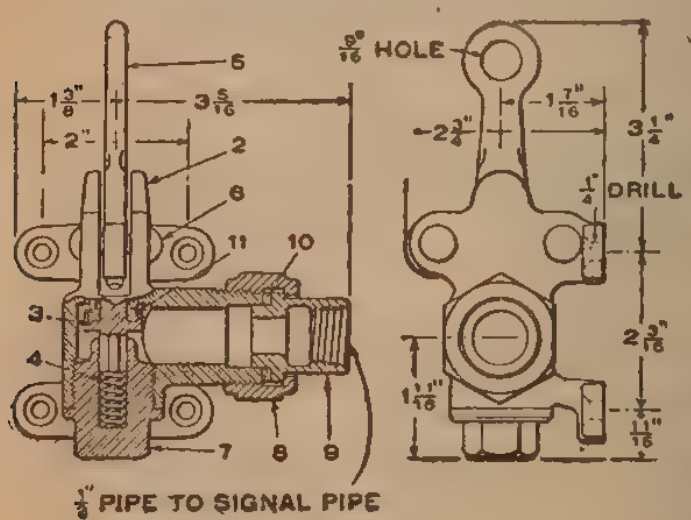

The signal cord is attached to the handle *5*. When the signal cord on either side of the discharge valve is pulled, the handle *5* strikes the stem *3* of the discharge valve and forces the valve from its seat. Air from the signal pipe then passes through

Spring Identification, Air Signal Equipments

Pc. No.	Out. Dia. A, In.	Dia. Wire B, In.	Free Height C, In.	No. Coils	Material	Name of Spring	Valve Used With
2,161	$\frac{11}{32}$	.072	$\frac{15}{16}$	8	Brass	Valve Spring	Car Discharge
2,372	$\frac{9}{16}$	.064	$1\frac{5}{16}$	9	Brass	Supply Valve	Signal Reducing
40,451	1	.22	$2\frac{3}{4}$	9	Steel	High-Pressure Regulating	Signal Reducing
2,231	$\frac{5}{8}$	.091	$\frac{5}{8}$	$3\frac{1}{2}$	Brass	Key	Signal Reducing

the branch pipes into the discharge valve, past the discharge valve, and out to the atmosphere, causing a reduction in signal-pipe pressure. As soon as the signal cord is released, the spring *4* forces the discharge valve to its seat again and stops the discharge of air from the signal pipe.

The branch pipe to the discharge valve is supplied with a strainer (where it connects with the main signal pipe) and a cut-out cock, the former to prevent dirt from reaching the discharge valve, and the latter to enable the discharge valve to be cut out in case it is disabled. The handle of the cut-out cock stands parallel with the pipe when the discharge valve is cut out, and at right angles to it when cut in. Also, the cut-out cocks in the signal pipe on either side of the signal hose are closed when the handles stand parallel with the pipe, and open when at right angles to it. The couplings in the signal hose are the H P-4 type, and are of a different size than the F P-5 couplings of the regular air-brake hose, so that signal hose and brake hose cannot be coupled by mistake.

The piece and reference numbers of the valve and its parts are given in the accompanying list.

Pc. No.	*Ref. No.*	*Name of Part*
2,156		Car discharge valve, complete.
2,157	2	Body.
2,158	3	Stem, complete, includes 11.
2,161	4	Spring.
2,162	5	Handle.
2,163	6	Stop-pin.
2,164	7	Cap.
2,165	8	½-in. union nut.
2,166	9	½-in. union swivel
2,204	10	½-in. union gasket.
2,160	11	Rubber seat.

AIR-SIGNAL EQUIPMENTS

Locomotive A-1 J	Locomotive ET L	Cars K	Pc. No.	Details	Net Weight Lb.
Pieces Required			Recommended For		
1			2,360	Signal reducing valve	8
		1	2,156	Car discharge valve	2½
1	1		2,205	Signal valve	16
1	1		2,804	Signal whistle	½
1			3,272	⅜-in. strainer	1½
	1		24,899	C-1-3-6 strainer and check valve with $\frac{3}{32}$-in. choke	3¾
		1	2,240	¾″ × ¾″ × ½″ signal-pipe strainer	1½
		1	15,213	½-in. cut-out cock	1½
2	2	2	2,233	¾-in. cut-out cocks	2½
4	4	2	2,237	¾-in. angle fittings	⅝
4	4	2	53,553	1⅛″ × 22″ hose with HP-4 couplings and ¾-in. nipples	10
2	2	2	20,810	H dummy couplings	¾

WATER-DISTRIBUTING SYSTEM

ARRANGEMENT OF TANKS AND AIR VALVES

In the accompanying illustration, Fig. 1, is shown the arrangement of the tanks and air valves of the water-raising system, in

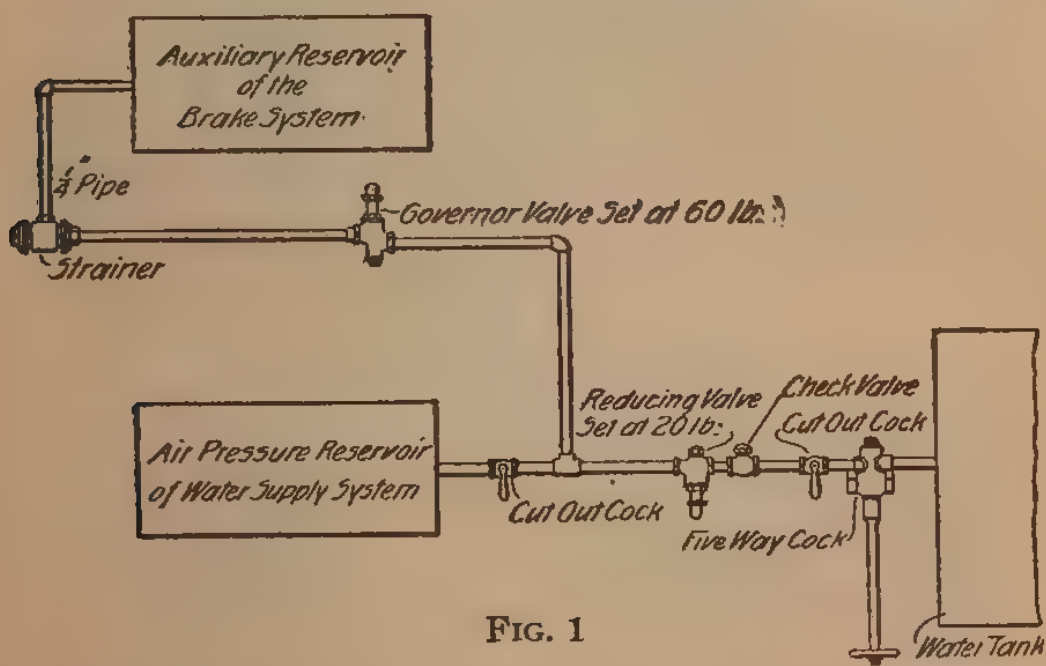

FIG. 1

combination with the air-brake system. The supply of air is taken from the auxiliary reservoir of the brake system.

AIR-PRESSURE-GOVERNOR VALVE

The accompanying cross-section shows the construction of the air-pressure-governor valve for the water-distributing system on Pullman cars, which weighs 5 lb. The piece number of the valve is 2,590; the piece and reference numbers of the various parts are given in the accompanying list.

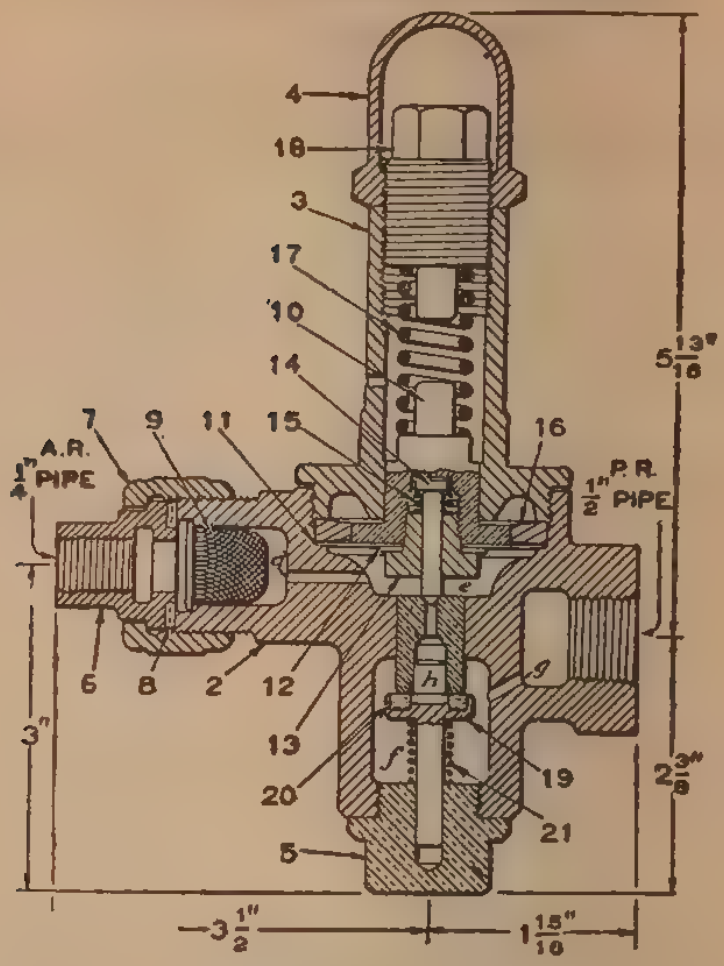

FIG. 2

Pc. No.	*Ref. No.*	*Name of Part*
2,591	2	Valve body, bushed.
2,594	3	Spring box.
2,599	4	Check-nut.
2,600	5	Supply-valve cap.
2,605	6	Union swivel.
2,165	7	Union nut.
2,204	8	Union gasket.
2,604	9	Strainer.
2,595	10	Diaphragm, complete, includes 11 to 15, inclusive.
2,038	11	Diaphragm, 2 pieces each.
2,040	12	Diaphragm washer.
2,041	13	Diaphragm nut.
2,039	14	Diaphragm valve.
2,042	15	Diaphragm-valve spring.
1,064	16	Diaphragm ring.
2,597	17	Regulating spring.
2,598	18	Regulating nut.
2,601	19	Supply valve, complete.
2,160	20	Rubber seat.
2,603	21	Supply-valve spring.

The governor valve should be placed between the auxiliary reservoir and water-supply air-pressure reservoir, so that the auxiliary-reservoir connection is at *AR* and the air-pressure reservoir connects at *PR*.

The adjustment of spring *17* is such that a pressure in chamber *e* of 60 lb. on diaphragm *11* is required to raise its valve from its seat. Therefore, the auxiliary reservoir of the air brake is charged to this extent before any pressure passes to the air reservoir of the water-supply system.

Air pressure from the auxiliary reservoir entering the valve at *AR* reaches chamber *e* through port *d*, and as it approximates 60 lb., diaphragm *11* and its valve are lifted, and valve *19* is forced from its seat, thereby permitting the pressure to pass to chamber *f*, and through port *g* to the air reservoir of the water-supply system. The stem *h* of valve *19* is purposely made a comparatively snug fit in its aperture in order to produce a sluggish feed of air past it to the air tank, causing auxiliary-reservoir pressure to be only slightly affected by any demand upon its air supply.

REDUCING VALVE

The reducing valve shown in cross-section, Fig. 3, weighs 6 lb. Its piece number is 2,663; the piece and reference numbers of the various parts are given in the accompanying list.

Pc. No.	*Ref. No.*	*Name of Part*
2,664	2	Valve body, bushed.
2,675	3	Spring box.
2,599	4	Check-nut.
2,680	5	Supply-valve cap.
2,166	6	½-in. union swivel.
2,165	7	½-in. union nut.
2,204	8	½-in. union gasket.
2,604	9	Strainer.
15,348		Piston, complete, includes 10, 11, 12, 14, and 15.
2,670	10	Piston stem.
2,672	11	Large diaphragm.
2,673	11	Small diaphragm.
2,668	12	Piston, includes 13.
13,206	13	Piston ring.
2,671	14	Piston nut.
42,388	15	Cotter.
2,674	16	Diaphragm ring.

Pc. No.	*Ref. No.*	*Name of Part*
2,676	17	Regulating spring.
2,677	18	Regulating nut.
2,678	19	Supply valve, complete.
2,423	20	Rubber seat.
2,603	21	Supply-valve spring.

Connect union fitting *6* with the pipe from the air reservoir, and connect the pipe to the water reservoirs at *WT*, inserting a check-valve, cut-out cock, and five-way cock in this pipe. The valve is adjusted to deliver 20 lb. pressure on the water for forcing the water throughout the car. Necessary readjustments are made by nut *18*.

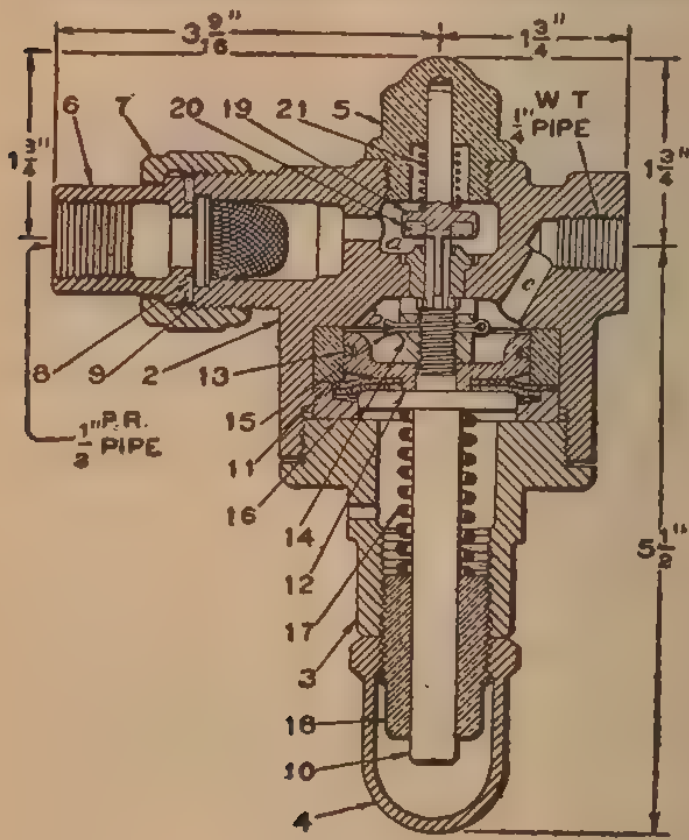

FIG. 3

Pressure entering the valve at *PR* passes to chamber *a*, thence past valve *19* to chamber *b*, and by passage *c* to *WT* and the water tanks. As the pressure in the latter approximates 20 lb., piston *12* is forced down and spring *21* closes valve *19*. As the air pressure in the water tanks diminishes through the use of water, the pressure on piston *12* is likewise affected, and the piston being forced upwards by spring *17*, opens valve *19* and restores the air pressure in the water tanks.

WATER-DISTRIBUTING EQUIPMENTS

Spring Identification, Water-Distributing Valves

Pc. No.	Out. Dia. *A*, In.	Dia. Wire *B*, In.	Free Height *C*, In.	No. Coils	Material	Name of Spring	Where Used
2,597	$\frac{45}{64}$	.134	2	$8\frac{1}{2}$	Nickeled Steel	Regulating	Air-Pressure Governor Valve
2,603	$\frac{11}{32}$	.04	$1\frac{7}{8}$	$8\frac{1}{2}$	Brass	Supply Valve	Air-Pressure Governor and Reducing Valves
2,676	$\frac{23}{32}$	.109	2	11	Nickeled Steel	Regulating	Reducing Valve.
2,042	$\frac{5}{16}$	.049	$\frac{5}{16}$	$3\frac{1}{2}$	Brass	Diaphragm V	Air-Pressure Governor Valve

MEMORANDA

MEMORANDA

MEMORANDA

MEMORANDA

MEMORANDA

MEMORANDA

MEMORANDA

MEMORANDA

MEMORANDA

MEMORANDA

Promoted

My position when I enrolled with the I.C.S. for the Complete Trainmen and Carmen's Course was that of a freight conductor with the Alabama Great Southern Railroad. Since I took your Course I have been promoted to the position of general yardmaster for the same road in Birmingham, Ala., and from that position I was promoted to train master. Having filled these positions with satisfaction, I have now chosen to take back my rights in train service, and am at present a passenger conductor for the same road.

R. E. Broyles,
5216 Grand Ave., Woodlawn, Ala.

NOW FOREMAN

FLOYD D. MUNN, Portsmouth, Ohio, was a freight-car builder earning a small salary when he enrolled with the I.C.S. for the Air Brake Course. He is now employed as air-brake foreman by the Norfolk and Western Railway Co.

A BETTER POSITION

W. N. BURMASTER, 333 Eliza St., Algiers, La., was an apprentice machinist when he took our Air Brake Course. This has enabled him to become shop and engine foreman for the New Orleans Southern and Grand Isle Railroad.

A GRADUATE'S SUCCESS

F. R. COLTON, 25 Seller's Location, Hibbing, Minn., was a machinist when he enrolled with the I. C. S. for the Complete Air Brake Course. Since graduating, he has become foreman of machine shops for the Oliver Iron Mining Co., where he has organized a Mechanical Club among the locomotive engineers, steam-shovel men, and shop men under his direction.

PROMOTION WITHOUT "PULL"

F. W. STOLL, Collinwood, Ohio, recommends the I. C. S. Air Brake Course, because it secured for him promotion without "pull." He was employed as a cook at $50 a month when he took up our Course He now holds, in addition to his rights as an engineer, a position as division superintendent of air brakes with the Lake Shore and the L. E., A. & W. Railroads at a substantial increase in salary and expenses.

NOW INSPECTOR

ALFRED JOBIN, 11½ South Heart Avenue, Quebec, Can., a graduate of our Complete Air Brake Course, was hardly able to read and write in English when he enrolled with the Schools, having picked up his knowledge by reading newspapers and magazines. Since graduating, he has become inspector in complete charge of the lower city section of the Quebec Railway, Light and Power Co. System.

NOW BAGGAGE MASTER

J. F. CAIN, 102 Alexander Place, Buffalo, N. Y., enrolled for our Complete Air Brake Course, while holding a position as flagman on a Lehigh Valley express train. He is now baggage master for the same company at a salary of $124 a month, and has also obtained his rights as train master.

Now Car Inspector

I am anxious for the management of the I.C.S. to know of the way I was benefited by taking the Air Brake Course. When I enrolled with the I. C. S. I was working for the small salary of $40 a month, having very little education. At the time I did not know a triple from an auxiliary, but at the end of 6 months I could do any kind of work in that line that turned up. My salary was increased, which was entirely due to the way the I. C. S handle their students. Failure is impossible for a student having enough knowledge to write his own name, for that is about all I could do at the time of enrolment. On the other hand, it matters not how much experience one has had, he can be benefited by taking a Course with the I. C. S. At present I am employed by the C. C. C. & St. Louis Railroad as car inspector.

A. L. Bryant,
515 E. 7th St., Mount Carmel, Ill.

NOW GENERAL FOREMAN

G. C. Livingston, 827 South Hawley St., Toledo, Ohio, was earning 15 cents an hour when he enrolled with the I.C.S. for the Air Brake Course. He found his work with the Schools a pleasure rather than a task, and was soon advanced both in salary and position. He is at present general foreman of the Car Department for the Hocking Valley Railroad, at Walbridge, Ohio.

SALARY INCREASED

When W. M. Wieland, Villa Grove, Ill., enrolled with us for the Complete Air Brake Course he was pumping water. He recommends his Course to any one desiring to improve his condition, because it has enabled him to become extra engineer for the C. & E. I. R. R. with an increase in his salary.

PASSED HIS EXAMINATION EASILY

W. Schaefer, 910 Buffum St., Milwaukee, Wis., was working as a fireman at the time of his enrolment for the Complete Air Brake Course. This he found of great benefit to him, since it enabled him to pass his examination for promotion easily. He is now an engineer on the C. M. & St. P. Railway.

STEADY PROMOTION

Charles H. Lamb, 1661 Locust St., Terre Haute, Ind., was working for $1.50 a day when he subscribed for the Complete Air Brake Course. Soon his wages were raised, and he was steadily promoted until he has now become air-brake foreman of the roundhouse of the Vandalia Railroad Co.

THE I. C. S. PAVED THE WAY

A. Skinner, 312 Ash St., Topeka, Kans., was earning $1.60 a day as an air-brake inspector when he enrolled with the I. C. S. for the Complete Air Brake Course. He found our textbooks so simple that he easily mastered them. He says that the road to success is not hard when the I. C. S. paves the way. His wages have been increased 180 per cent.

A GRADUATE'S SUCCESS

Homer H. Stuckey, 6215 Wabash Ave., Chicago, Ill., a graduate of our Air Brake Course, was earning about $80 a month as an air-brake inspector on the Lake Shore at the time of his enrolment. He is now regarded as an expert in his line, and his salary has been increased some 50 per cent.

Conductor for Southern Pacific

WALTER J. BROWN, 292 North Ave., 23, Los Angeles, Cal., was working in the Air-Brake Service of the D. & J. R. R. R. at the time when he enrolled with the I. C. S. for the Air Brake Course. At the time he had received nothing more than a common-school education. After graduating, he entered the service of the Southern Pacific Railway Co., where he is now employed in the capacity of conductor.

A GRADUATE'S SUCCESS

FRANK V. BROSE, 609 Parker St., Mason City, Iowa, was a fireman for the C. M. & St. P. R. R. Co., when he enrolled for our Locomotive Running Course. He found this very helpful to him in passing the examinations required by the road, and it has enabled him to become, since graduation, an engineer for the same company, earning from $100 to $150 a month.

MADE THE EXAMINATION EASY

THOMAS HESSER, 46 Weaver Ave., Buffalo, N. Y., says that his Locomotive Running Course, for which he subscribed with the I. C. S., made his examination easy. Before he finished the Course he was promoted from the position of fireman to that of engineer on the Lackawanna, and his salary has been increased 100 per cent.

HIS BEST INVESTMENT

PETER DENEEF, 612 DuBois St., Elmira, N. Y., declares that the money he has spent for his Locomotive Running Course was the very best investment he ever made, since it brought about his promotion to his position as engineer within 2 years after he began to study. When he came up for examination, Mr. Deneef obtained a rating of 100 per cent.

NO LONGER HANDLES THE SCOOP

J. E. CAMIRAND, Sherbrooke, P. Q., Can., says that the Locomotive Running Course for which he subscribed with the I. C. S. is responsible for his promotion to his position as engineer. He was a fireman when he enrolled, and he declares that but for his Course he would still be handling the scoop.

DOUBLED HIS SALARY

HANS C. BROWN, 14 East Linden St., Wilkes-Barre, Pa., a native of Norway, was working as a fireman on the Lehigh Valley Railroad when he enrolled with the I. C. S. for the Locomotive Running Course. He says that without this instruction he could not have passed the examination for engineers. With the help of the Schools, he has now become an engineer for the same company, and his salary has been increased more than 100 per cent.

ENGINEER FOR LUMBER COMPANY

NICHOLAS COLILAR, Costello, Potter County, Pa., was earning $45 a month as a fireman when he enrolled with the Schools for the Locomotive Running Course. He is now running an engine for the Emporium Lumber Co.

Engineer for Bessemer & Lake Erie

CARL O. BARNES, Cranesville, Pa., was firing on the Bessemer & Lake Erie Railroad, earning during the summer season from $70 to $100 a month, at the time when he enrolled with the International Correspondence Schools for the Locomotive Running Course. Previous to this time, he had obtained only an eighth-grade common-school education. After completing the Course, he obtained promotion to the position of engineer for the same company.

NOW AN ENGINEER

H. F. Stowe, 934 North 3d St., Springfield, Ill., did not know anything about running a locomotive, nor how to repair its machinery at the time he enrolled with the I. C. S. for the Complete Locomotive Running Course. At the time he began to study he was earning on an average about $85 a month as a fireman. His Course enabled him to pass a good examination and to secure promotion to the position of engineer.

ALWAYS RECOMMENDS THE I. C. S.

Fred Ockershauser, Baraboo, Wis., was a fireman when he enrolled for our Locomotive Running Course. Although the Northwestern Railway has the reputation of giving more thorough mechanical examinations than any other company, he was able to pass a good examination, and is today working as one of the company's engineers. His advice to all who wish to better their conditions is "Take a Course with the I. C. S." His income has been increased 60 per cent.

NOW FOREMAN

C. Jacobes, Box 173, Sausalito, Cal., had suffered bodily injury at electrical work, and was serving as a fireman when he enrolled with the Schools for the Complete Locomotive Running Course. He is now foreman in charge at night of the Northwestern Pacific Railway Co.'s shops and roundhouse at Sausalito, Cal.

SALARY INCREASED $70 A MONTH

Clarence A. Reed, 72 Richards Ave., Dover, N. J., praises the I. C. S., because our Locomotive Running Course has enabled him to pass successful examinations to secure promotion from the position of fireman to that of engineer on the D. L. & W. Railroad, thereby increasing his earnings.

GRATIFYING ADVANCEMENT

B. P. Walker, Newton, Tex., enrolled for our Complete Locomotive Running Course while he was earning $1.75 a day as a fireman. He is now employed as an engineer on the Frisco Lines.

HIS COURSE BROUGHT SUCCESS

B. L. Simpkins, 113 Baldwin Ave., Bluefield, W. Va., was earning about $55 a month when he enrolled for our Locomotive Running Course. He says that the Schools not only helped him to pass a good examination, but that they also kept him posted on all new equipment coming into use on various roads. He now has a daylight run as a locomotive engineer on the Norfolk & Western Railway.

Three Times His Former Salary

J. C. WHITTEN, 76 Danforth St., Providence, R. I., was employed as a locomotive fireman on the Worcester Division of the N. Y., N. H. & Hartford Railroad at the time of his enrolment for the Locomotive Running Course. Because of poverty in his youth, he had no chance to obtain an education, knowing little of arithmetic and being obliged to use the dictionary continually to make sure he understood the meaning of every word in his Course. Mr. Whitten praises the Schools, because, in spite of his handicap, he was able to pass a very satisfactory examination, and to become first-class engineer on the Providence Division of the Railway company above named. He is now receiving about three times what he was paid at the time of enrolment.

MADE 100 PER CENT.

William K. Shirk, 901 Indiana Ave., Elkhart, Ind., was working as a fireman when he enrolled with the I.C.S. for the Complete Locomotive Running Course. When he came up for examination for promotion to the position of engineer on the Lake Shore & Michigan Southern Railroad, he received a rating of 100 per cent. in all his studies. Mr. Shirk says that his success was entirely due to his Course. He is now an engineer for the same company, with a salary increase of 75 per cent.

DOUBLED HIS SALARY

Although Clinton F. Wertman, 554 Jackson Ave., Jersey City, N. J., had not finished the grammar school, he had no difficulty in mastering his Round House Course. When he enrolled he was a fireman. He is now an engineer on the L. V. R. R.

HIS COURSE DID IT

W. L. Stull, Brunswick, Md., a fireman on the B. & O., enrolled for the Complete Locomotive Running Course. Within a year he was made traveling fireman. He is now engineer for the same road. He declares that his Course is responsible for his promotion.

100 PER CENT. INCREASE

Fred L. Edwards, 104 Jerome Ave., Joliet, Ill., was firing a locomotive at the time of his enrolment for the Locomotive Running Course. He praises his Course as the best in the world, since he has been promoted to the position of locomotive engineer for the C., R. I. & P. R. R.

GLAD HE ENROLLED

C. A. Ganz, Box 291, Trafford, Pa., is glad that he enrolled for the Complete Air Brake Course, since it got him into the position he holds today. Since obtaining his diploma, he has become assistant foreman of air-brake and car inspectors at the Pitcairn yard. His salary has been increased.

PROMOTED—SALARY DOUBLED

When A. B. Chandler, Spencer, N. C., came up for examination he missed only one question, although one-third of the firemen who were examined, failed to pass. Mr. Chandler declares that his I.C.S. Complete Locomotive Running Course was the cause of his promotion to the position of engineer on the main line of the Southern Railroad. His salary has been doubled.

Averages 4,500 Miles a Month

I was a fireman, earning $2.30 a day, or 100 miles, when I enrolled with the I. C. S. for the Locomotive Running Course. Before I had finished half the lessons, I passed a satisfactory examination as required by the Frisco Railroad to become an engineer. I have been engaged as a locomotive engineer 9 years, 4 years in freight, and 5 years in the passenger service. No one who has completed your Course need have any fear of any criticism from his employers, because he will know what to do and how to do it. I am making now on an average of 4,500 miles a month, making an increase over my former salary of 150 per cent.

JOHN QUINN,
703 F Avenue, Lawton, Okla.

SALARY DOUBLED

E. A. DUDLEY, 514 Milwaukee Ave., Chicago, Ill., was employed as a foreman on the Chicago & Northwestern Railroad when he enrolled with the I. C. S. for the Locomotive Running Course. He had only a common-school education at the time. He says he has only the I. C. S. to thank for his success in passing the examination, which advanced him to the position of engineer for the same company, doubling his salary.

CHIEF INTERCHANGE CAR INSPECTOR

A. SINGER, Texarkana, Ark., was a freight-car inspector, earning $1.60 for a 12-hour day at the time he enrolled for the Trainmen's Course. He is now chief interchange car inspector for the four important railways that pass through his city.

A GRADUATE'S SUCCESS

J. F. LUTHER, Bellville, Tex., since graduating from our Complete Locomotive Course, has been advanced from the position of fireman to that of extra switch engineer with a substantial increase in salary.

THREE TIMES HIS FORMER SALARY

A. C. DE LANGE, Summit, S. Dak., was earning on an average $60 a month as a fireman when he enrolled with the Schools for the Complete Locomotive Running Course. This has enabled him to advance to the position of engineer.

NOW GENERAL FOREMAN

The general foreman of the C., S. P., M. & O. R. R. Co. is Mr. J. O. ENOCKSON. When he enrolled with the I. C. S. for the Locomotive Running Course he held a position in the same employ as a fireman. He has found our methods of education so beneficial that he is now studying a Course in Mechanical Engineering.

SALARY INCREASED 200 PER CENT.

HARRY STEPHENS, Clarion, Iowa, was receiving $45 a month in a roundhouse at the time he enrolled with the Schools for the Roundhouse Course. He is now a steam-shovel engineer for the Chicago & Great Western Co., and his salary has been increased, since enrolment, 200 per cent.

Found His Course Profitable

It kept me hustling as a fireman on a switch engine at the time of enrolment with the I.C.S. I had quit the public schools in the fifth grade, and had no other education except what I picked up at the time of enrolment. In 1 year after enrolment, at the age of 21, with no other instruction than what I received from the Complete Locomotive Running Course, I began to run on the C. & E. I. Railroad. I now have a local run, making 55 miles a day with every night and Sunday off, three meals a day. I am making more than three times as much as when I was firing.

CHARLES L. WITHERS,
2107 Main St., Danville, Ill.

BECAME FOREMAN

When HERMAN L. WALTON, 531 Berwick St., Easton, Pa., started to study his I. C. S. Boilermaker's Course, he could not work out simple questions in long division, and did not know how many pounds of steam a boiler could carry without guessing at it. He now holds the position of foreman of boilermaking at the South Easton Shops of the Lehigh Valley Railroad Co. at a salary 100 per cent. greater than when he enrolled.

HOLDS AN IMPORTANT POSITION

B. B. FITCH, Room 506, 112 Water St., Boston, Mass., was an engineer and janitor in charge of one of the public schools when he enrolled for the Boilermaker's Course. He was then 36 years old, and had been earning a living for 18 years at a laborious occupation. After 1 year's study of his course he passed successful examinations and secured the position of boiler inspector for the Fidelity & Casualty Co. of New York, with a material increase in his salary.

A FOREIGNER'S RISE

JOSEPH MOLINEK, New Glasgow, Nova Scotia, Can., could barely read or write when he enrolled with the Schools for the Boilermaker's Course, having been in this country but 2 years. He says that our Course has made him foreman of the structural shop for the Brown Machine Co., employing 350 men, with an increase in his wages amounting to 150 per cent.

SALARY TRIPLED

JAMES M. BANISTER, Bogalusa, La., was car inspector for the Great Southern Lumber Company, when he enrolled for his Course. Today he is foreman of car shops with his salary tripled.

BETTERED HIS POSITION—DOUBLED HIS SALARY

While firing a locomotive for the Foster-Lahinear Lumber Company, O. H. JOSEPH, 433 Indiana Ave., North Fond du Lac, Wis., enrolled for our Complete Locomotive Running Course. From this he graduated. He is now employed on the "Soo" line.

CHIEF AIR INSPECTOR

J. A. MCGUYER, 1517 South 19th St., Terre Haute, Ind., was working as a car repairer at the time he enrolled for the Complete Air Brake Course. He is at present chief air inspector at Terre Haute, having increased his salary 25 per cent. He declares that his advancement is chiefly due to the Course he took with the I.C.S.

I CAN SUCCEED

"What other men have accomplished through I.C.S. help, I can. If the I.C.S. have raised the salaries of these men, they can raise mine. To me, I.C.S. means 'I Can SUCCEED.'"

Get the "I Can Succeed" spirit, for the I.C.S. *can* raise your salary, whether you're a dollar-a-day man or a dollar-an-hour man. On an average, 300 students every month *voluntarily* report better positions and salaries as the direct result of *I.C.S. help.* **An I.C.S. Training Comes Easy.** If you can read and write, the I.C.S. will *go to you* and train you *in your spare time* for a well-paid position in your chosen line of work. Mark and mail the coupon NOW.

TEAR OUT HERE

International Correspondence Schools

Box 1764, Scranton, Pa.

Explain fully about your Course in the subject marked X:

- ☐ Electrical Engineering
- ☐ Mechanical Engineering
- ☐ Mechanical Drafting
- ☐ Steam Engineering
- ☐ Civil Engineering
- ☐ Stationary Engineering
- ☐ Mining Engineering
- ☐ Architecture
- ☐ Architectural Drafting
- ☐ Concrete Engineering
- ☐ Plumbing and Heating
- ☐ Advertising
- ☐ Salesmanship
- ☐ Bookkeeping
- ☐ Commercial Law
- ☐ Business Management
- ☐ Stenography
- ☐ Civil Service
- ☐ Automobiles
- ☐ Chemistry
- ☐ Textile Superintendent
- ☐ Illustrating
- ☐ Farming
- ☐ Poultry
- ☐ French

Name _____

Address _____